G2

SMALL GAS INSERT FIREPLACE

A gas insert made to fit and replace wood fireplaces.

Valor® FIREPLACES

Why Choose

Feel the heat.

All our gas fireplaces radiate heat. Like feeling the sun on your skin. The best kind of heat there is.

Heater-rated

We're rated with space heaters so we put Radiant Heat Technology into every fire. You can feel it.

Works quietly.

We designed our gas fireplaces to move the heated air via natural convection at the rate of 110 cubic foot per minute—no need for a noisy blower.

Stainless Steel burner

Our precision stainless steel burners don't rust, and create an enhanced flame and ember glow that produces radiant heat.

Efficiency

Valor fireplaces are heater-rated. Our Radiant Zone Heating is up to 25% more efficient than central forced air systems.

ON COVER:
EDGEMONT FRONT +
4-SIDED BACKING PLATE 441EDF4B
LINER + LOGS 460PBL + 405LSK

To find out more, visit
valorfireplaces.com/why-valor

A Valor?

Improving heat

Our exclusive *Secondary Heat Exchanger* and our aerodynamic firebox naturally improve convective heat—without a fan.

Logs provide heat.

High definition, low mass fiber ceramic logs heat up and glow quickly. We harness the radiating heat from our logs, just like real logs.

Ceramic glass window

Valor's durable and robust ceramic glass window improves radiant performance by absorbing and distributing radiant heat.

Built to last.

Our aluminized steel fireboxes handle high temperatures, delivering efficient radiant warmth. Our baked-on powder-coated paint offers a better texture and a more durable finish.

No power?

No problem. All Valor gas fireplaces run on 4 AA batteries as the primary source of power—not as back-up power like other brands. And you'll save money on your electrical bill.

Safety

We put our fires through rigorous safety testing in our in-house CSA approved lab.

We provide a screen with every fireplace to keep you and your loved ones safe.

All Valor gas fireplaces are rated for outdoors under a covered patio and use quality materials that exceed the requirements for outdoor use.

Design your own.

Visit the Valor Fireplace Design Center to design your very own Valor Fireplace today.

EDGEMONT FRONT +
4-SIDED BACKING PLATE 441EDF4B
LINER + LOGS 460PBL + 405LSK

G2 FIREPLACE: THE PROBLEM SOLVER

Do you have a wood-burning fireplace that rarely gets used because of the hassle of chopping wood, cleaning ash, and ongoing maintenance? The G2 fireplace is our smallest insert but with a big window, providing the warmth and ambiance of a fire without the work and mess of burning wood. The dependable performance of a G2 makes it an ideal upgrade for homeowners seeking comfort, convenience, and style.

G2 LOG, TRIMS AND FINISHES

Choose from two trims for your G2 insert fireplace—a 3-sided or 4-sided combination—with powder-coated steel finish that will last you a lifetime.

Our logs provide heat so you can expect to feel radiant warmth when you turn on the G2. Consider the type of hearth you have when selecting your front.

FIND OUT MORE ONLINE:

Efficiency

EDGEMONT FRONT +
3-SIDED BACKING PLATE 442EDF3B
LINER + LOGS 460PBL + 405LSK

SECONDARY HEAT EXCHANGER

The Secondary Heat Exchanger will heat up your G2 fast and continue providing comfortable radiant and convective heat efficiently. With no need for electricity, you'll save money too.

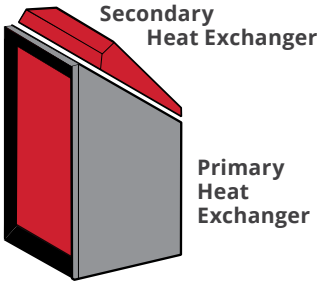

G2 EFFICIENCY	NG	LP
ENERGUIDE*	72%	74%
HIGH INPUT	22000	22000
LOW INPUT	12000	11375
MAX OUTPUT*	16986	17296

* EnerGuide ratings and outputs have been determined without a fan/blower, using the CSA p.4.1-15 test method. Certified to ANSI Z21.88/CSA 2.33
Vented Gas Fireplace Heater American National Standard. CGA-2.17-91 Gas fired appliances for use at high altitudes.

Valor 10 remote

Every Valor fireplace comes with a remote. Your Valor 10 remote lets you select, adjust or program your desired temperature—the fire automatically adjusts to maintain the temperature of the room. Your remote even allows you to turn your pilot light on or off from the comfort of your sofa.

To find out more, visit **valorfireplaces.com/remote**

EDGEMONT FRONT +
3-SIDED BACKING PLATE 442EDF3B
LINER + LOGS 460PBL + 405LSK

DIMENSIONS

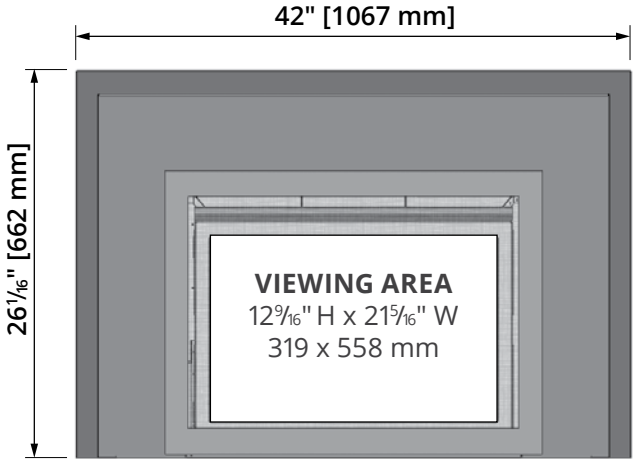

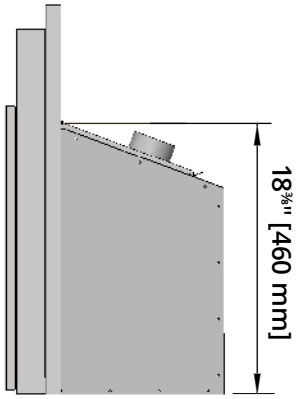

EDGEMONT FRONT + 3-SIDED BACKING PLATE

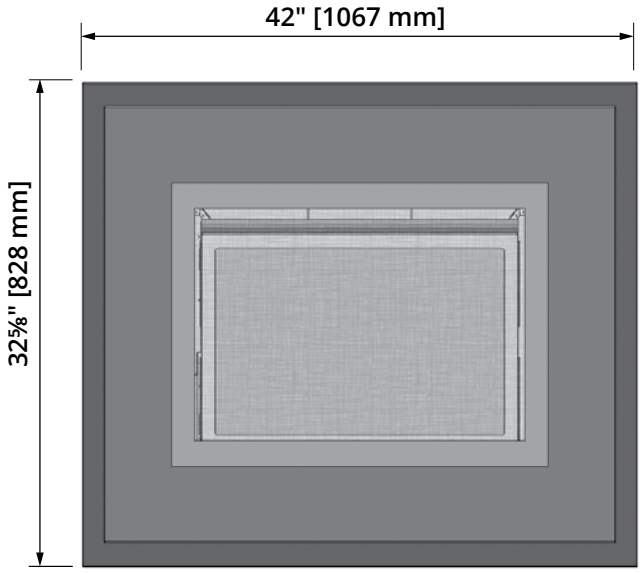

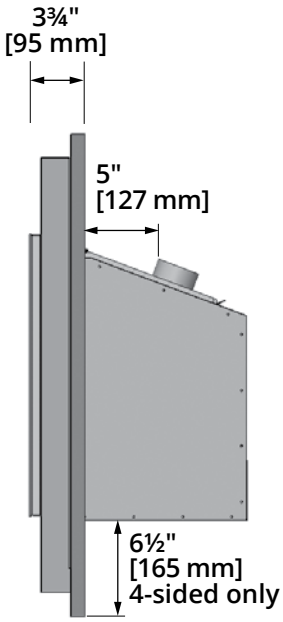

EDGEMONT FRONT + 4-SIDED BACKING PLATE

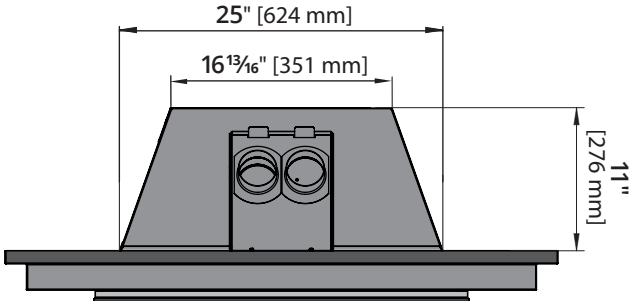

MINIMUM CAVITY CLEARANCES

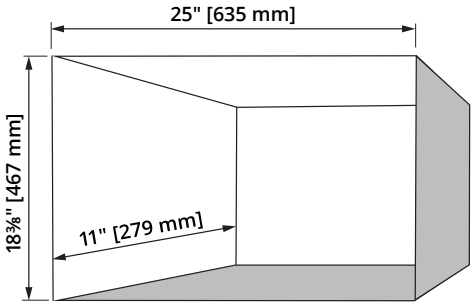

ALWAYS REFER TO THE G2 MANUAL FOR COMPLETE INSTRUCTIONS.

SPECS

G2 DIRECT VENT	
Engine, Natural gas	400AN
Engine, Propane	400AP

LOG	
G2 Traditional Logs	405LSK

LINER	
Plain Black	460PBL

FRONTS	
Edgemont + 3-sided, blacking plate	442EDF3B
Edgemont + 4-sided, blacking plate	441EDF4B

OPTIONAL	
Wall Switch Kit	1265WSK
Circulating Fan Kit	455CFK

WANT AN OUTDOOR FIREPLACE?
OUR OUTDOOR CONVERSION KIT (GV6O)
TURNS THE G2 INTO AN OUTDOOR FIREPLACE.

⚠ WARNING

This product can expose you to chemicals including Benzene, which is known to the State of California to cause cancer and birth defects or other reproductive harm.

For more information go to www.P65Warnings.ca.gov

BRG226E AUG