IN PARTNERSHIP WITH

Charlton & Jenrick LTD

Valor FIREPLACES

INSTRUCTION MANUAL

GE3 ELECTRIC FIREPLACE INSERT

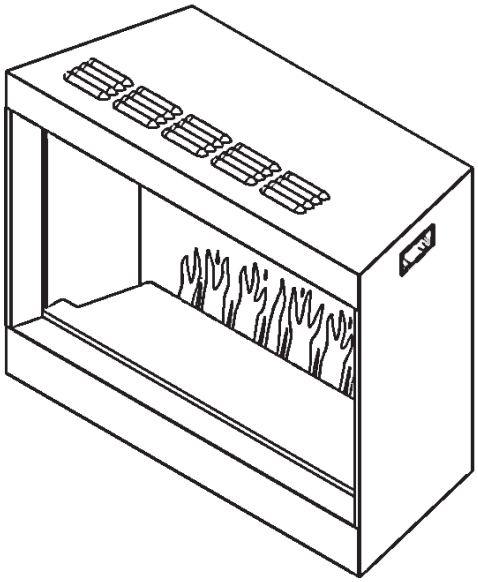

⚠ WARNING

Read and understand this entire owner's manual, including all safety information, before plugging in or using this product. Failure to do so could result in fire, electric shock, or serious personal injury.

⚠ Caution

Keep this owner's manual for future reference. If you sell or give this product away, make sure this manual accompanies this product.

Ce guide est disponible en français sur demande.

Welcome to Valor®

This appliance has been professionally installed by:
Dealer Name: _____
Phone:_____

Please read this manual BEFORE installing and operating this appliance.

Important Safety Information 4
Appliance Certifications 6
Technical Specifications..... 7
Pack Content 8
Appliance Dimensions 9
Accessories 10
- Fuel Beds 10
- Mood Lighting.....10
- Fronts & Backing Plates 11

Installation Instructions 13
- Preparation 13
  - Installing Into an Existing Fireplace.....13
  - Installing Into a Built-in Cavity 14
  - Connect the Mood Ligting Cable 15
  - Connect the Power Supply 16
  - Prepare the Appliance.....17
- Installation 19
  - Appliance 19
  - Fuel Bed 19
  - Front 19

Operating Instructions 20
- Manual Control..... 20
- Remote Control 21
- App Control..... 23

Maintenance 24
Service Parts List 25
Wiring Diagram..... 27
Valor Electric Fireplaces Warranty..... 28

Important Safety Information

This manual contains very important information about the safe installation and operation of the fireplace. Read and understand all instructions carefully before installing and operating the fireplace. Failure to follow these instructions may result in possible fire hazard and will void the warranty.

Replacement manuals are available by contacting the Valor Customer Service at 1-800-468-2567, or by visiting **valorfireplaces.com**.

- **Read all instructions before using this heater!**
- This heater is hot when in use. To avoid burns, **DO NOT** let bare skin touch hot surfaces. If provided, use handles when moving this heater. Keep combustible materials, such as furniture, pillows, bedding, papers, clothes, and curtains at least 39 inches (1 m) from the front of the heater and keep them away from the sides and rear.
- Extreme caution is necessary when any heater is used by or near children or invalids and whenever the heater is left operating and unattended.
- **DO NOT** operate any heater with a damaged cord or plug or after the heater malfunctions, has been dropped or damaged in any manner. Disconnect power at service panel and have heater inspected by a reputable electrician before reusing.
- **INDOOR use only! NEVER** use this heater outdoors! Doing so may result in electric shock!
- To disconnect heater, turn controls to off, and turn off power to heater circuit at main disconnect panel.
- **DO NOT** run power cord under carpeting. **DO NOT** cover power cord with throw rugs, runners, or similar coverings. **DO NOT** route power cord under furniture or appliances. Arrange power cord away from traffic area, and where it will not be tripped over.
- **DO NOT** insert or allow foreign objects to enter any ventilation or exhaust opening, as this may cause electric shock or fire, or damage the heater.

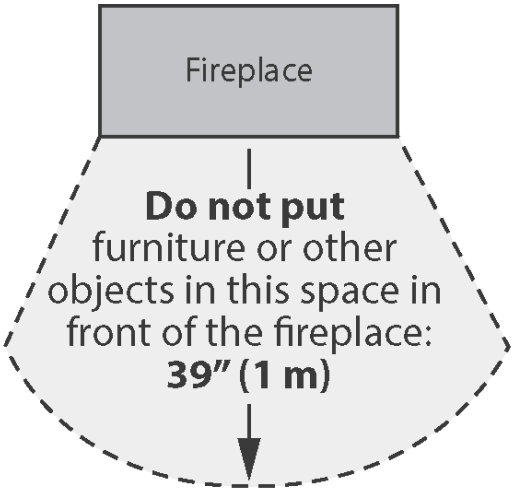

- To prevent a possible fire, **DO NOT** block air intakes or exhaust in any manner.
- A heater has hot and arcing or sparking parts inside. **DO NOT** use it in areas where gasoline, paint, or flammable liquids are used or stored.
- Use this heater only as described in this manual. Any other use not recommended by the manufacturer may cause fire, electric shock, or injury to persons.
- This appliance **MUST** be grounded.
- **ALWAYS** plug heaters directly into a wall outlet/receptacle. **NEVER** use with an extension cord or relocatable power tap (outlet/power strip).
- **NEVER** use this heater in bathrooms, laundry rooms, or any other location where the heater could fall into a bathtub or pool, become damp, or come in contact with water.
- **AVOID FIRE!** Regularly inspect all air vents to make sure they are free from dust, lint, or other blockage. Unplug the unit and clean with a vacuum ONLY. **DO NOT** rinse or get wet.

Important Safety Information

⚠ WARNING

DO NOT depend on the ON/OFF switch as the sole means of disconnecting power when servicing or moving the heater. Always unplug the power cord.

⚠ WARNING

Reduce the risk of fire or electric shock—DO NOT use this heater with any solid state speed control devices.

- **NEVER** hang this unit on a wall directly below an electrical outlet.
- For residential use only! **NOT** for commercial use! Any commercial or public use of this heater voids all warranties, and could cause injury.
- This product is not intended to be a primary heat source. It is for supplemental heat only.
- Risk of electric shock! **DO NOT OPEN!** No user-serviceable parts inside!
- **NEVER** modify this heater. Doing so could result in personal injury or property damage. Modification of this fireplace completely voids all warranties.
- **ALWAYS** turn this heater off before unplugging it from the outlet.
- **ALWAYS** disconnect this unit from the power supply before performing any assembly or cleaning, or before relocating the electric fireplace.
- **NEVER** leave this heater unattended. **ALWAYS** unplug this heater when not in use.
- **ALWAYS** store this heater in a dry location. **NEVER** use the fireplace if it has become wet.
- **ONLY** use this heater on a 120V AC 15-Amp or 240V AC 15-Amp circuit. **NEVER** overload the circuit. If this heater trips the circuit breaker, unplug all other appliances on the same circuit before the next use. Avoid plugging other appliances into the same circuit as this heater.
- **NEVER** plug this heater into an outlet that is old, cracked, or has any loose wires or connections. Plugging this heater into a faulty outlet could result in electric arcing within the outlet that could cause the outlet to overheat or catch fire.
- **ALWAYS** check your heater cord and plug connections with each use!
- **MAKE SURE** the plug fits tight in the outlet! Faulty wall outlet connections or loose plugs can cause the outlet to overheat.
- Heaters draw more current than small appliances. Overheating may occur even if it has not occurred with the use of other appliances.
- During use check frequently to see if the plug outlet or faceplate is **HOT**! If the outlet or faceplate is **HOT**, discontinue use immediately and have a qualified electrician inspect and/or replace the faulty outlets.
- **SAVE THESE INSTRUCTIONS!**

Appliance Certifications

This device has been tested in accordance with the CSA Standards for fixed and location-dedicated electric room heaters in the United States and Canada.

⚠ WARNING

The appliance must be electrically wired and grounded in accordance with local codes or, in the absence of local codes, with the latest edition of the National Electrical Code ANSI/NFPA/70 in the United States or the Canadian Electrical Code CSA C22.1 in Canada.

This device complies with part 15 of the FCC Rules. Operation is subject to the following two conditions:

(1) This device may not cause harmful interference.

(2) This device must accept any interference received, including interference that may cause undesired operation.

FCC WARNING:

Any Changes or modifications not expressly approved by the party responsible for compliance could void the user's authority to operate the equipment.

Note: This equipment has been tested and found to comply with the limits for a Class B digital device, pursuant to part 15 of the FCC Rules. These limits are designed to provide reasonable protection against harmful interference in a residential installation. This equipment generates uses and can radiate radio frequency energy and, if not installed and used in accordance with the instructions, may cause harmful interference to radio communications. However, there is no guarantee that interference will not occur in a particular installation. If this equipment does cause harmful interference to radio or television reception, which can be determined by turning the equipment off and on, the user is encouraged to try to correct the interference by one or more of the following measures:

- Reorient or relocate the receiving antenna.
- Increase the separation between the equipment and receiver.
- Connect the equipment into an outlet on a circuit different from that to which the receiver is connected.
- Consult the dealer or an experienced radio/TV technician for help.

The device has been evaluated to meet general RF exposure requirement. The device can be used in portable exposure condition without restriction.

Technical Specifications

Specifications

Supply Voltage	AC 120V 60 Hz	AC 240V 60HZ
Maximum power consumption	1400W	2800W
	4700 BTU/hr	9400 BTU/hr

Model No.: GE3

Power for flame effect: 16 W

Power for Mood Light: 9 W

To change voltage from 120V to 240V, access the switch inside the fireplace, behind the front glass window—see *Removing the front glass panel* page 17 in this manual.

Caution

BEFORE installation, ensure the voltage switch, inside the appliance, behind the front window, is set to voltage to be used by the fireplace.

If 240 V is to be used, it must be hardwired.

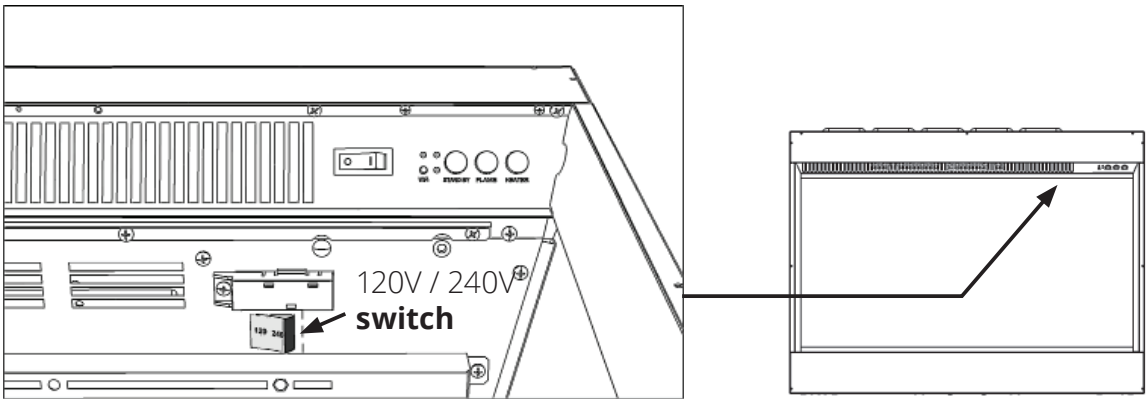

Rating Plate

The rating plate is located at the rear of the left hand side panel.

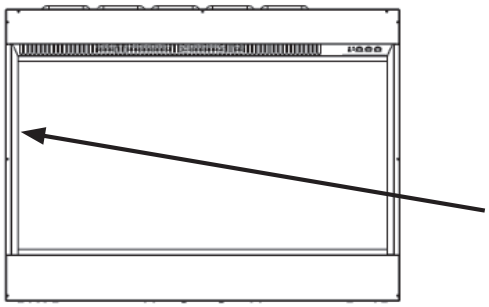

ELECTRIC FIREPLACE

MODEL: GE3
VOLTAGE: 120 V/240 V AC
FREQUENCY: 60 Hz
WATTS: 1400 W/2800 W
SERIAL No.: [redacted]

Dist. by Miles Industries Ltd
Mfg. by Charlton & Jenrick Ltd

C US
602971

FCC ID: 2A2IZ-GE3
IC: 27451-GE3
CAN ICES-3(B)/NBM-3(B)

Made in China

Pack Content

1. Unpack the fireplace carefully and make sure that the appliance is intact with no signs of damage caused by transport and no part has been exposed to water. If in doubt, do not use the appliance and contact your retailer.
2. Keep plastic wrapping away from children.
3. Save the original packaging as this may be required in the event of service complaint with product.
4. Check that all parts are removed from the packing.

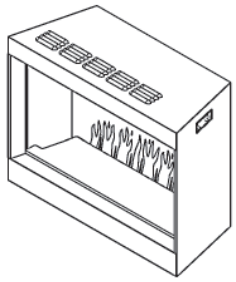 Firebox	Small magnetic handle (1 pc)	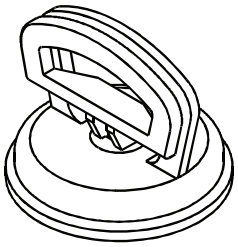 Suction handle (orange) (1 pc)
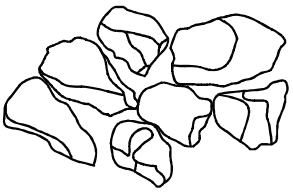 Black Ember Glass (1 set)	Vermiculite (1 set)	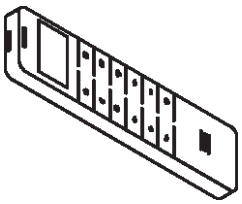 Remote Control (1 pc)
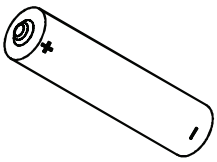 AAA (R03) Battery (2 pcs)	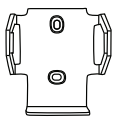 Remote wall holder (1 pc)	Instructions (1 pc)

Appliance Dimensions

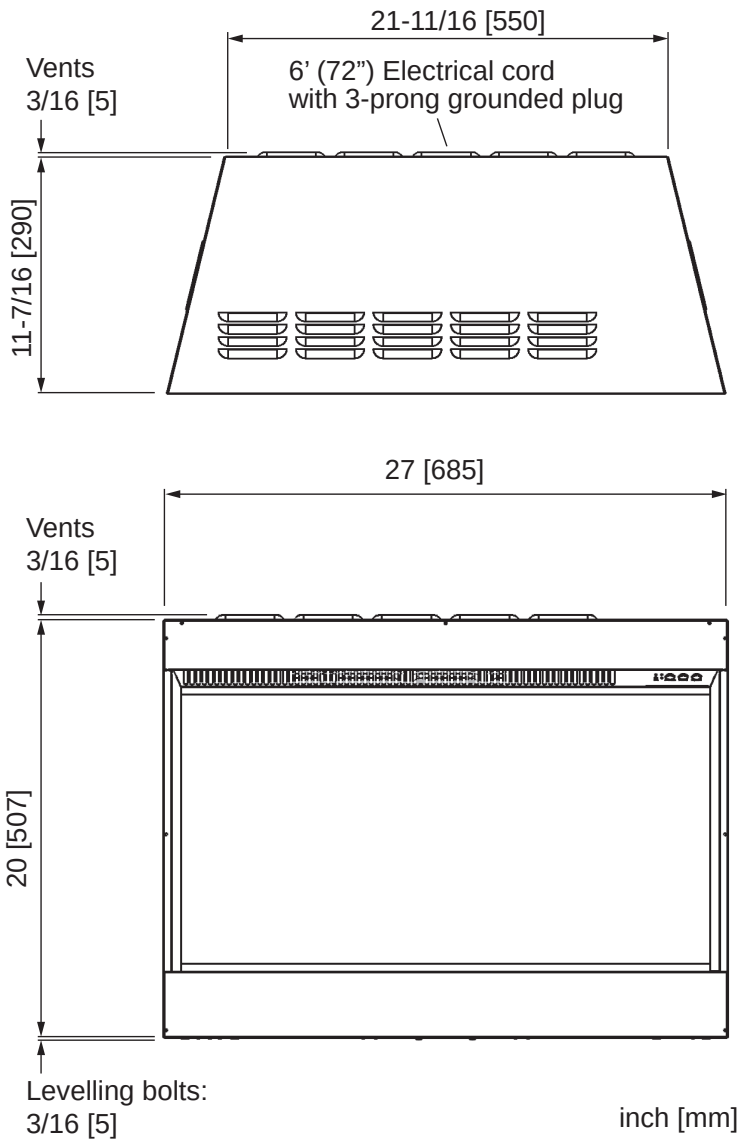

NOTE: Appliance equipped with levelling bolts for installation on uneven surface.

ATTENTION!

Clearances from combustible materials are not the same as cavity/framing dimensions.

The dimensions shown on this page are those of the appliance only.

Recommended cavity and framing dimensions are slightly larger than the fireplace to accomodate the wiring and potential surfaces variations in cavity/framing building materials.

See pages 13-14 for cavity/framing dimensions.

Clearances from combustibles

Top: 0

Bottom: 0

Sides: 0

Rear: 0

Front: Minimum 39" [1 m]

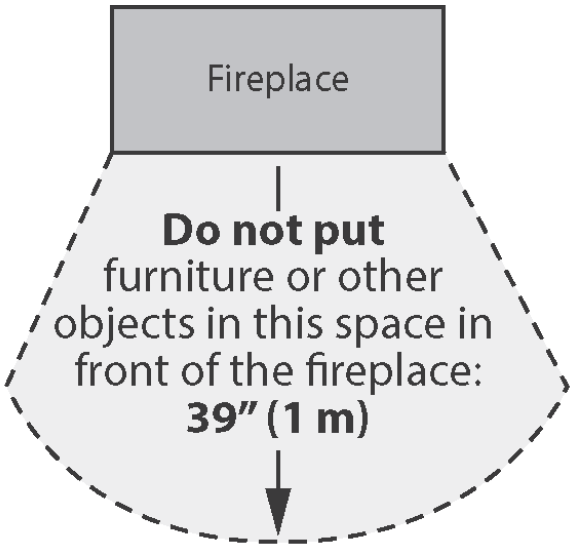

Accessories

Fuel Beds

This appliance is supplied with black glass embers and vermiculite. In addition, three optional log sets are offered to complement the embers/vermiculite.

- **GE3DWK—Driftwood Log Kit**

- **GE3SWK—Splitwood Log Kit**

- **GE3BLK—Birch Log Kit**

Mood Lighting

This appliance can be installed with optional LED strip lighting, up to 9 W.

- **MLLED9W—9 W, 3 meter LED strip with 1 meter connection cable**

- **MLEC—1 meter extension cable**

- **ML2WS—2 way splitter cable max 1 per fireplace**

Accessories

Fronts & Backing Plates

Fronts and optional backing plates are offered separately to help finish the appliance contour, either when installed in the chimney or framed into the wall. Follow the instructions supplied with each front/ backing plate.

Additionally, the GE3 fronts may be installed with the Valor risers 725, 752 or 793 when height of the cavity is exceeding the height of the backing plate coverage. These risers are placed at the bottom of the trim and the fireplace must be raised to equal the riser surface.

- **GE3CFV—Clearview Front. Requires either GE3SK1 or GE3BPB1.**
- **GE3SK1—Minimum Coverage Shroud Kit. Extends minimal coverage on three sides of the fireplace.**

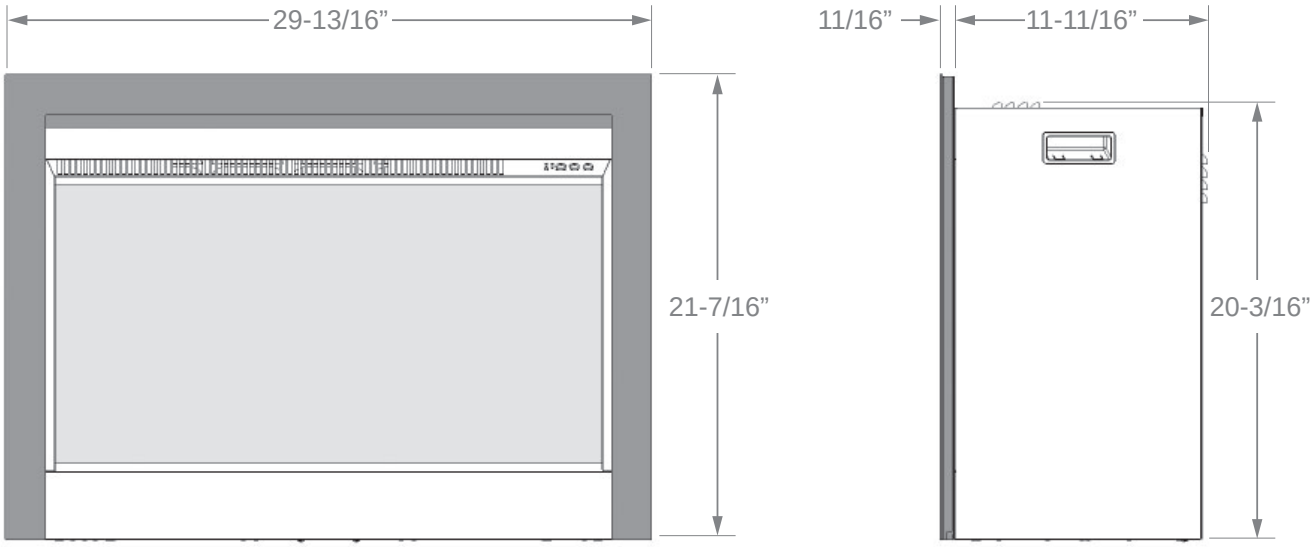

GE3CFV + GE3SK1

- **GE3BPB1—3-sided backing plate. Offers more coverage on three sides of the fireplace, 37-1/2” wide.**

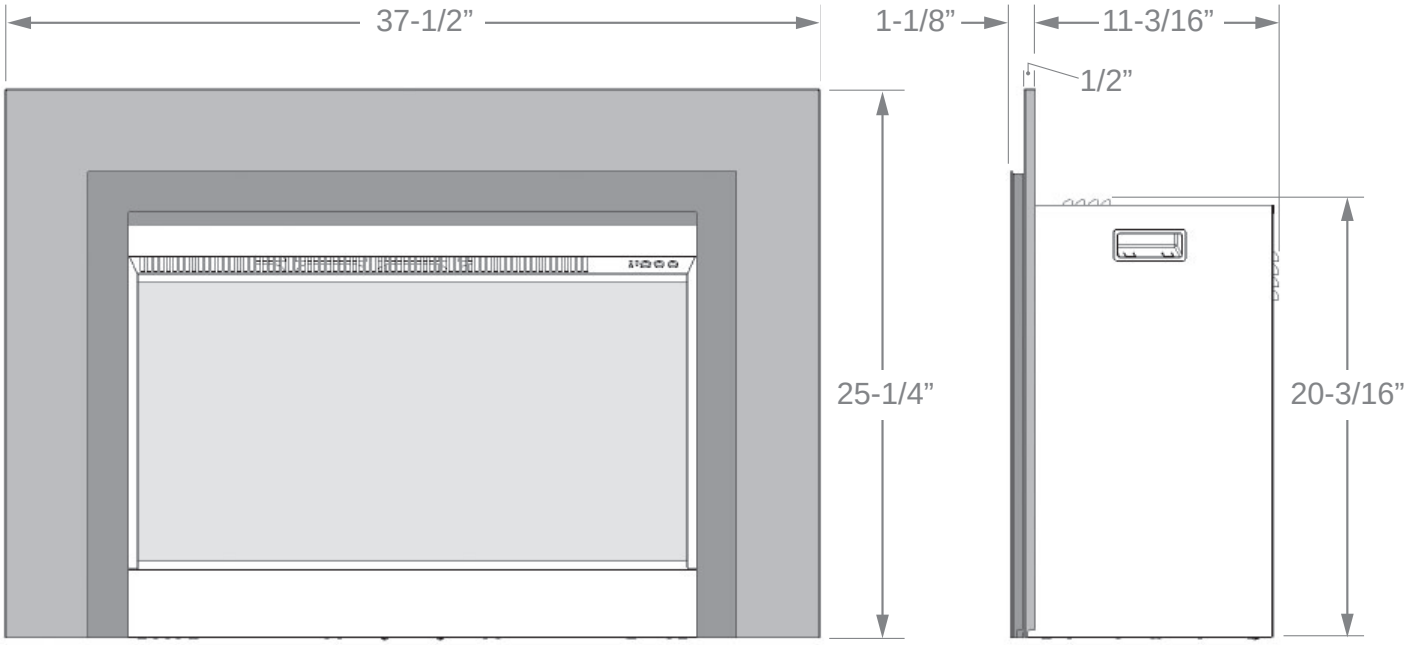

GE3CFV + GE3BPB1

Accessories

Fronts & Backing Plates

- **GE3EDPW—4-Sided Edgemont Front. Requires GE34SBP1 or GE3SK1.**
  NOTE: When installed with the GE3SK1, the front hangs 1/8” below the bottom of the fireplace.

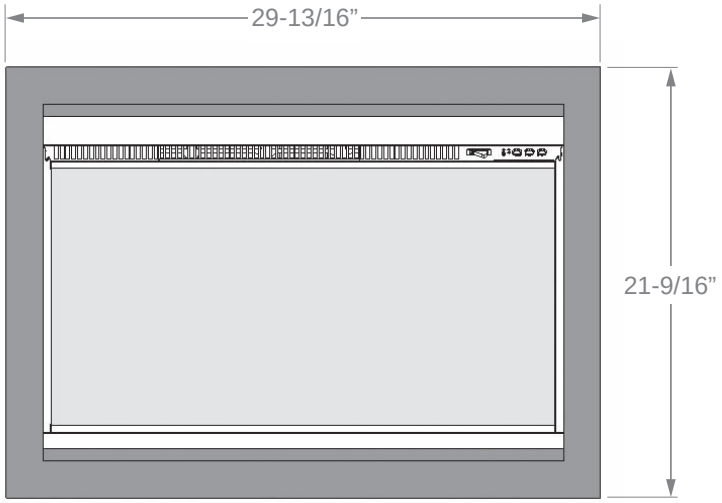

GE3EDPW + GE3SK1

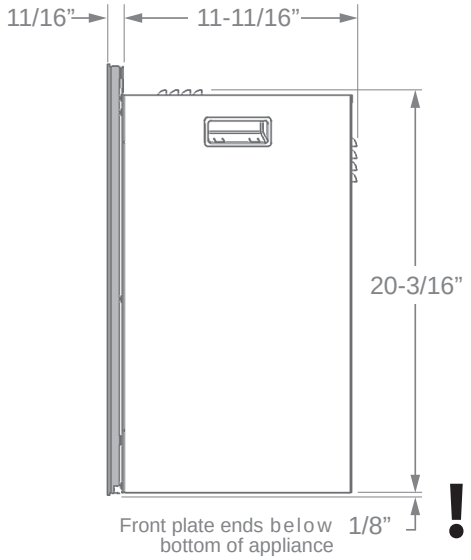

- **GE34SBP1—4-Sided Backing Plate. Offers more coverage. 37-1/2” wide.**
  NOTE: This plate hangs 2-5/8” below the bottom of the fireplace.

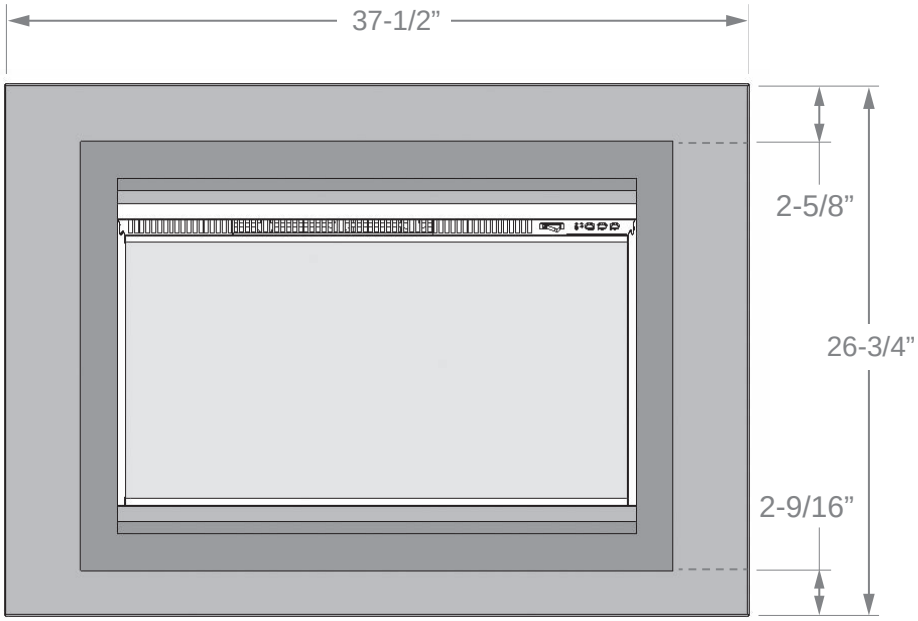

GE3EDPW + GE34BP1

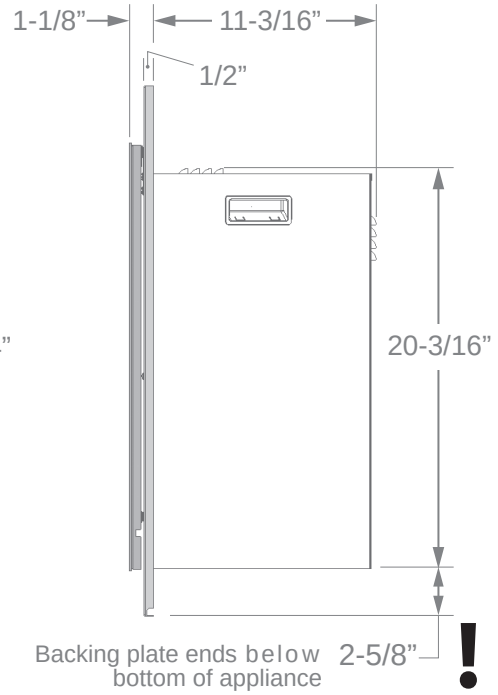

PREPARATION BEFORE INSTALLATION

Tools

A screwdriver, a spirit level and drill will be needed.

Appliance Location

Your new electric fireplace may be installed either in an existing fireplace cavity or framed into the wall. However, when choosing a location, ensure that the general instructions are followed:

- For best result, install out of direct sunlight, away from damp locations.
- The appliance should be connected to an grounded electrical outlet and it must be easily accessible to allow disconnection.

The following is only given as a general guide because it can be installed in different ways.

This appliance is intended to be installed either in an existing fireplace cavity or into a built-in cavity.

Provided you ensure electric connections are safely made in accordance with the codes, various materials can be used for the framework and cladding. Ensure the framing and wall finish are self-supporting and do not rely on the appliance to support framing or wall finish. Consideration should be made to soften the internal surface of any cladding to minimize that amplification
of noise.

Installing Into an Existing Fireplace

When the appliance is to be fitted into or against an open flue or chimney, it is important that the flue/chimney is blocked, for example with 'Rockwool' to avoid a negative air pull that may oppose the heater fan.

In addition, the chimney should be cleaned, including the cavity, ash dump to avoid dust/ashes entering into the appliance or being circulated into the room.

Clean and Insulate Existing Fireplace Cavity

A few points must be considered before inserting the GE3 into an existing fireplace cavity including minimum cavity dimensions shown below.

- **Clean Fireplace and Chimney.** Have the chimney swept and the fireplace cavity including ash dumps and clean-outs cleaned before installing the GE3 fireplace. Any creosote or soot residue remaining in the fireplace cavity chimney or clean-out may cause odors or stains once the GE3 insert is installed. Consult with chimney sweep for information on how best to clean.
- **Existing Dampers.** Close off the dampers and clean-outs.
- **Ash Retaining Curbs.** Some fireplace (particularly factory-built) have a raised curb at the front edge to retain ashes. Check the dimensions carefully to ensure the GE3 will fit behind any raised curb (some curbs may be removed separately from the refractory base).

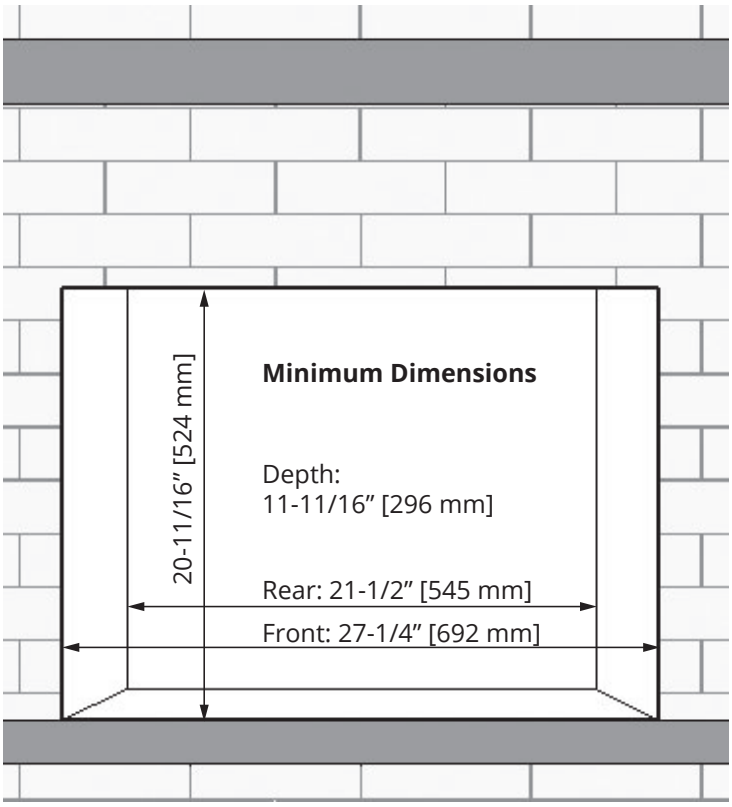

Installing Into a Built-in Cavity

- **Prepare the framing.** As a general guide only, see picture below.

> **NOTE**
>
> **Ensure a firm flat positioning of the appliance to avoid vibration and movement of the appliance after finishing.**

- **Wall finish.** Hard surfaces can amplify sound. Consider adding some underlay or similar to the inside surface of the wall finish.

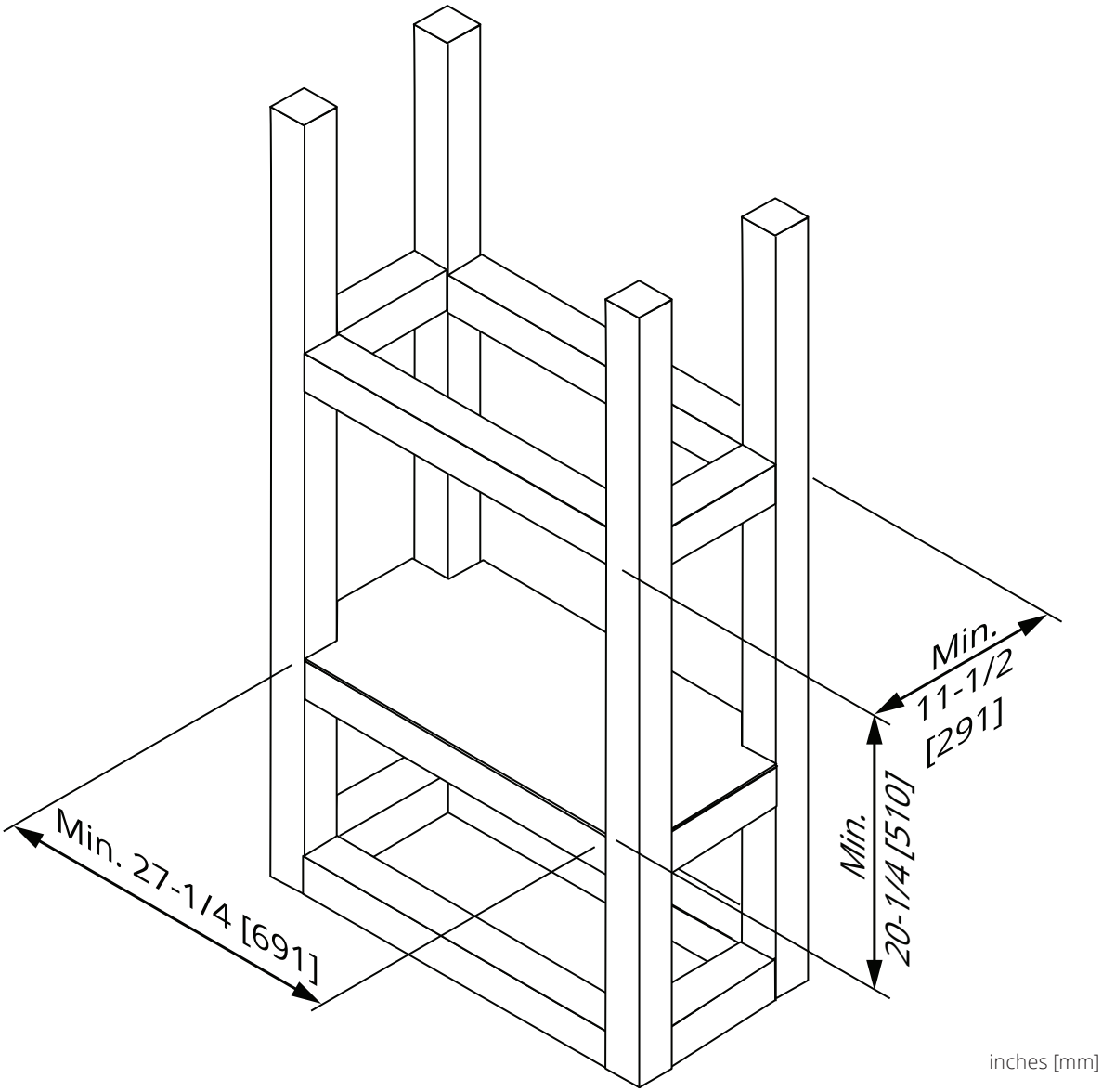

Connect the Mood Ligting Cable

The Mood Lighting is optional and sold separately.
Use only the Valor brand.
Other brands may not be suitable and can void the warranty.

Available kits:

For GE3: maximum 9 W

- MLLED9W—9 W kit: 1 x 3-meter (9’10”) LED strip + 1-meter (39”) Connection Cable

Additional optional lighting accessory kits:

- MLEC—1-meter (39”) Extension Cable
- ML2WS—2-way Splitter Cable (max. 1 per fireplace)

The connector for the mood lighting cable is on the back of the appliance, near the power cord outlet. To connect it, follow the instructions supplied with the mood lighting cable package.

⚠ WARNING

DO NOT EXCEED the Mood Lighting power indicated above and in the section Specifications, otherwise a short-circuit could compromise the appliance function.

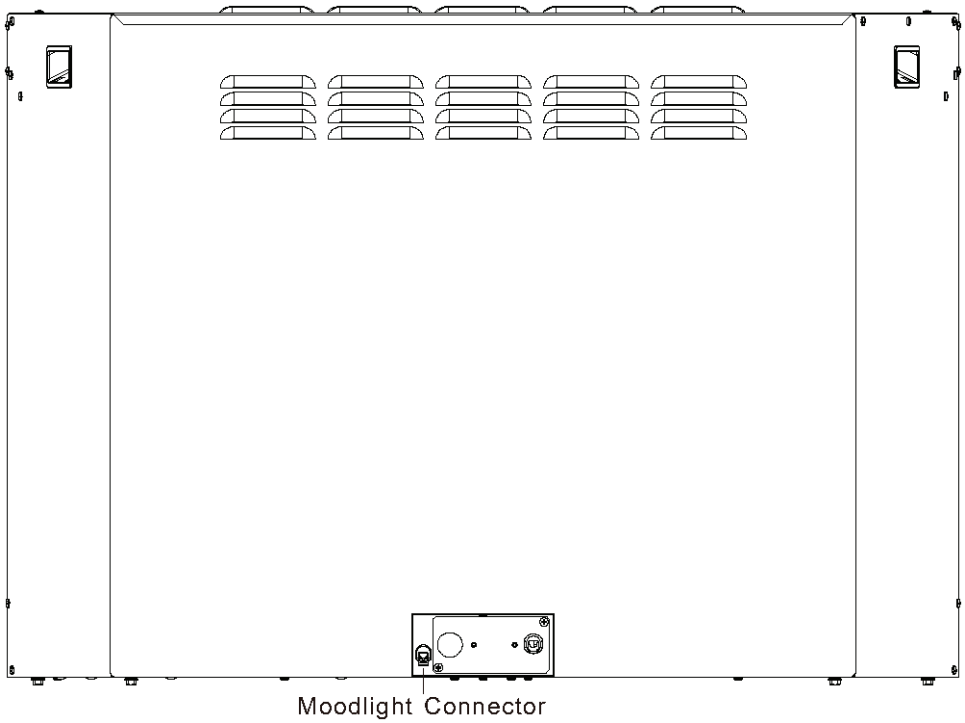

Rear of appliance

Connect the Power Supply

This appliance can operate on 120V or 240V. To change voltage from 120V to 240V, access switch inside fireplace, behind the front glass window—see *Removing the front glass panel* on page 17.

The power connection can be made with the 6 feet Mains Cable provided or alternatively it can be hard wired by unscrewing and removing the Access Plate, the Mains Cable and retention grommet. The access plate can be repositioned so that the 22mm hole sits over the cutout in back of appliance.

The 22mm hole can be used for hard wiring access with a strain relief clamp.

WARNING

All electrical installation must be performed by a qualified electrician and must be electrically wired and grounded in accordance with local codes or, in the absence of local codes, with the latest edition of the National Electrical Code ANSI/NFPA/ 0 in the United States or the Canadian Electrical Code CSA C22.1 in Canada.

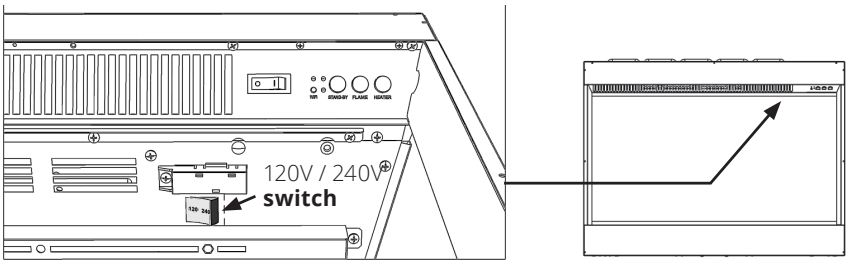

Caution

BEFORE installation, ensure the voltage switch inside the appliance, behind the front window, is set to voltage to be used by the fireplace.

If 240 V is to be used, it must be hardwired.

Hard Wiring

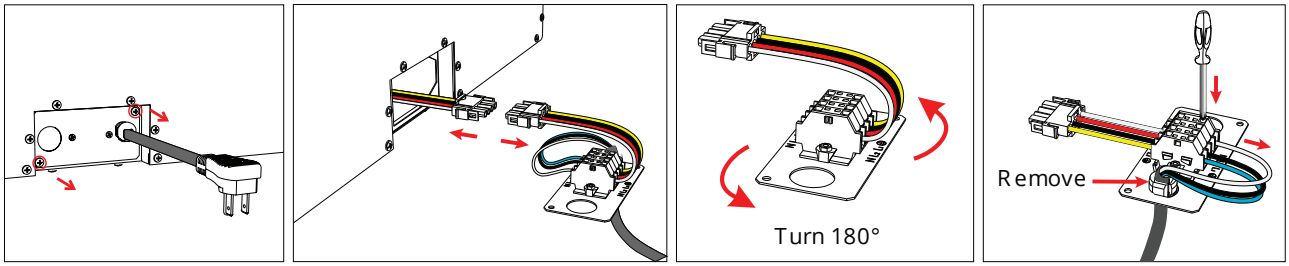

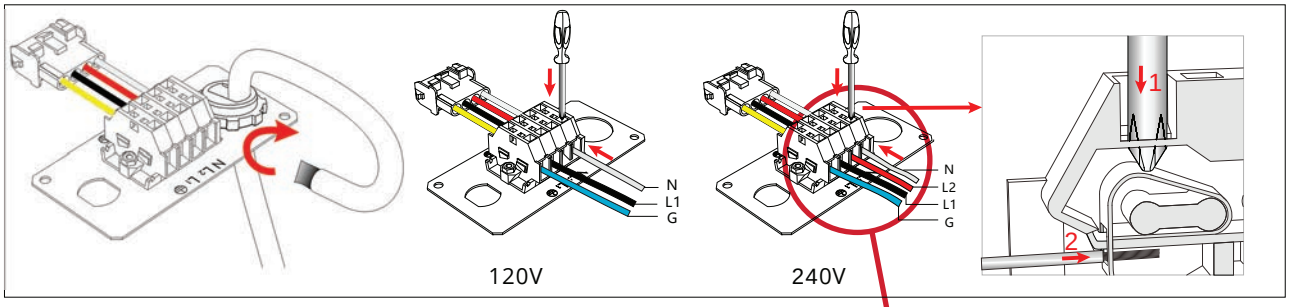

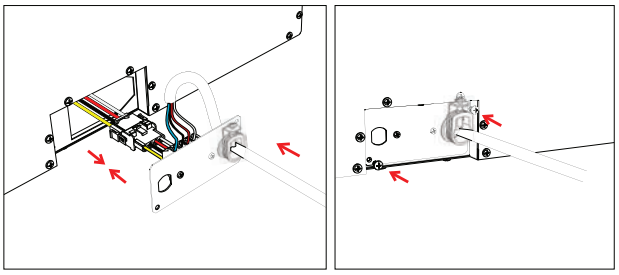

IMPORTANT! 240V wiring: Bring L1 and L2 all the way to the terminal blocks, do not tie them together outside of the unit.

NOTE: A strain relief is required where the incoming wires pass through the metal plate.

Prepare the Appliance

Removing the front glass panel

1. Stick the small magnetic handle just above the center of one of the appliance's side panel. The side panels are held in place by magnets.

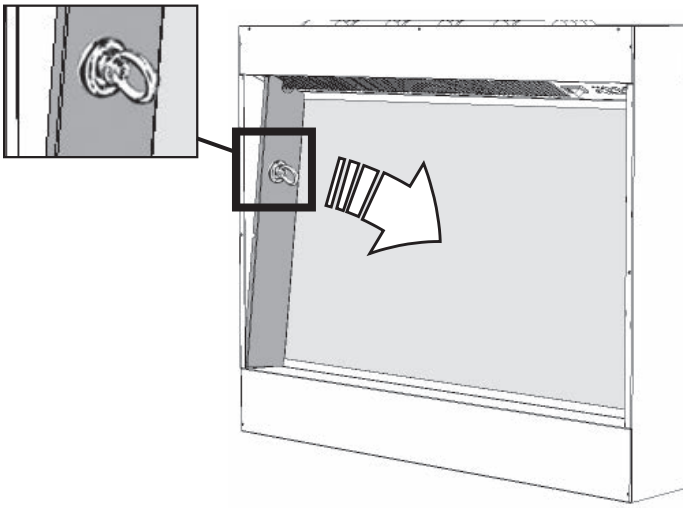

2. Pull the panel towards the center of the appliance then grab it and remove it. Alternately, you can pull out the side panels by inserting you finger in the cutout at the top of each panel.

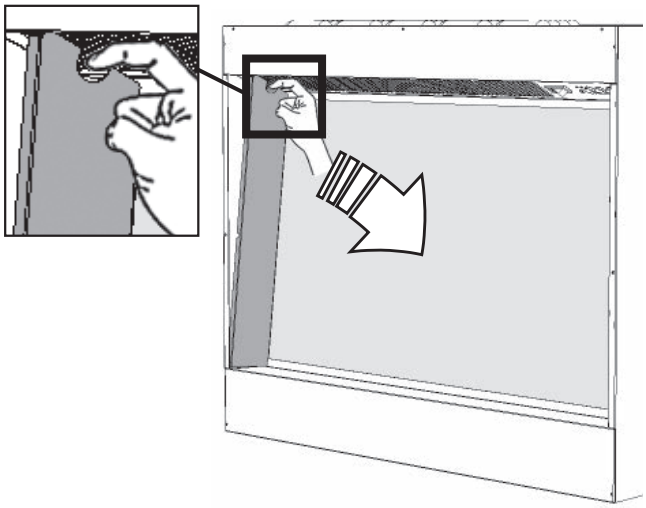

3. Repeat with the other side panel.

4. On the bottom horizontal panel in front of the glass, remove one screw at each end. Lift the panel out.

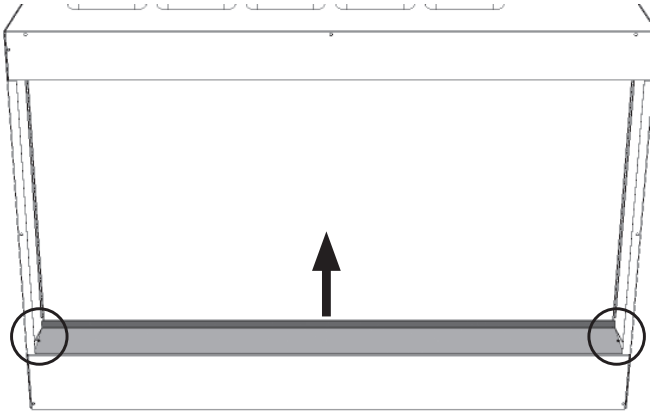

5. Using the suction cup (orange) provided to support the middle of the glass panel and lift the panel upwards and pull it forwards as its lower edge. Carefully lift glass away as shown below.

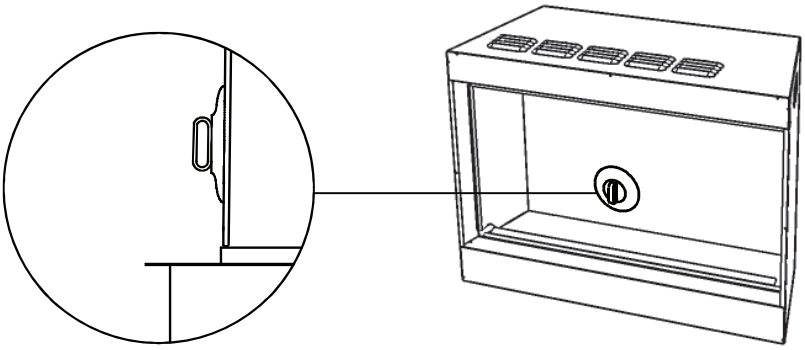

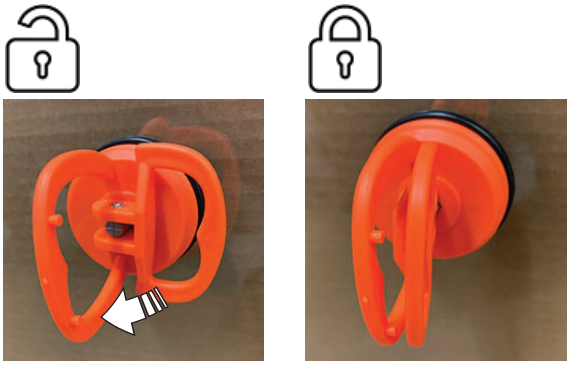

6. Very carefully pull the glass bottom first and then slide down top to disengage it from the top strip. Set aside in a secure location to avoid damaging it.

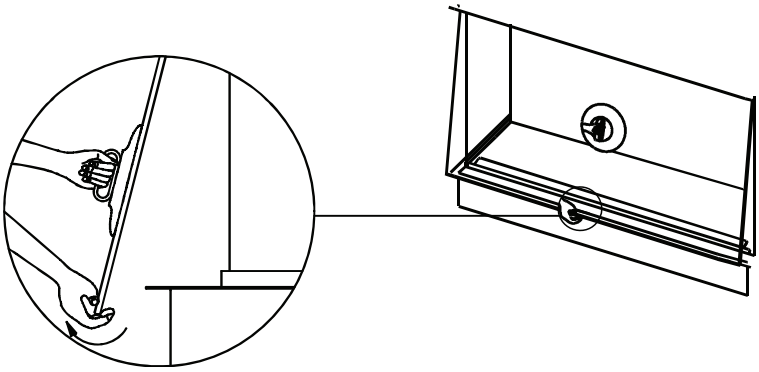

Installation Instructions

Appliance

Slide the fireplace into the cavity of the existing prepared fireplace or into the built-in framing.

Plug in the fireplace or hard-wire it. See details under *Connect the Power Supply* page 16 in this manual.

Check that the power functions using the appliance's manual control panel—see page 20.

Fuel Bed

Once the appliance is in final place, install the fuel bed. It helps to turn the fireplace's lights on when placing the logs to highlight their details. See the appliance's control panel—page 20—or use the remote control—see *Fuel Bed* page 22.

Log Sets

See *Fuel Beds* page 10 of this manual for optional log sets.

If you have purchased a log set, unpack the logs carefully, then place them according to the instructions provided with the set.

Glass Embers and Vermiculite

Glass embers and vermiculite are provided with the fireplace.

Lay the Glass Embers evenly around the logs to cover the bottom of the bed.

Sprinkle the Vermiculite into the gaps between the Glass Embers.

Reinstall the Glass

In reverse order, reinstall the glass on the fireplace, being very careful when manipulating it—see page 17 for reference.

1. Slide the glass pane behind the top black strip then push the bottom in place.
2. Reinstall the bottom horizontal panel securing it with two screws.
3. Reinstall the side magnetic panels, placing the top first, then the bottom.

Front

See *Fronts & Backing Plates* pages 11–12 in this manual for Fronts and Backing Plates Dimensions.

Install the choosen front and optional backing plate according to the installation instructions provided with each kit.

Operating Instructions

BEFORE OPERATION

⚠ WARNING

DO NOT operate the appliance if it is damaged or malfunctions. If you suspect the appliance is damaged or malfunctions, call a qualified service engineer to inspect the appliance, and replace any part of the electrical system if necessary before reusing.

⚠ WARNING

To reduce the risk of fire, keep textiles, curtains, and any other flammable material a minimum distance of 39 inches (1 meter) from the air outlet.

MAKE SURE the plug fits tight in the outlet. Faulty wall outlet connections or loose plugs can cause the outlet to overheat.

DO NOT disconnect the power at the mains supply whilst the appliance is running. Use the functions on the remote to turn the fire off and ensure the mains switch has been moved to the off position before disconnecting.

The appliance can be operated conveniently in 3 different ways:

- **manually,**
- **by remote control handset, or**
- **with the dedicated iOS/Android app.**

MANUAL CONTROL

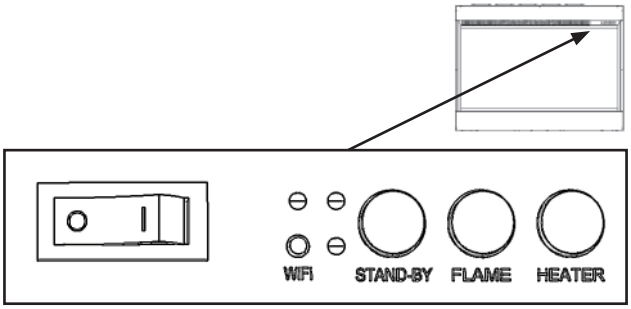

MANUAL SWITCH

Press “I” to turn on power to the appliance; press “O” to turn it off.

STAND-BY

Press to turn on the last used settings without any heat. Also, places the appliance into standby mode with all features turned off.

FLAME

Press repeatedly to cycle through 6 fire preset modes and 3 user defined presets if programmed.

HEATER

Press to cycle through the heat output options: ON-OFF-AUTO. **(AUTO only functions with the mobile application, once it has been programmed)**

WIFI

Press to turn WiFi on or off. An illuminated LED on the button indicates that WiFi is turned on. Hold button for 3 seconds to enter device pairing mode.

To Turn OFF Audible Beep

Each time a button is pressed on the appliance or on the remote control, an audible beep is emitted. To turn off this feature, keep pressing the button **FLAME** for 3 seconds until you hear two beeps.

REMOTE CONTROL

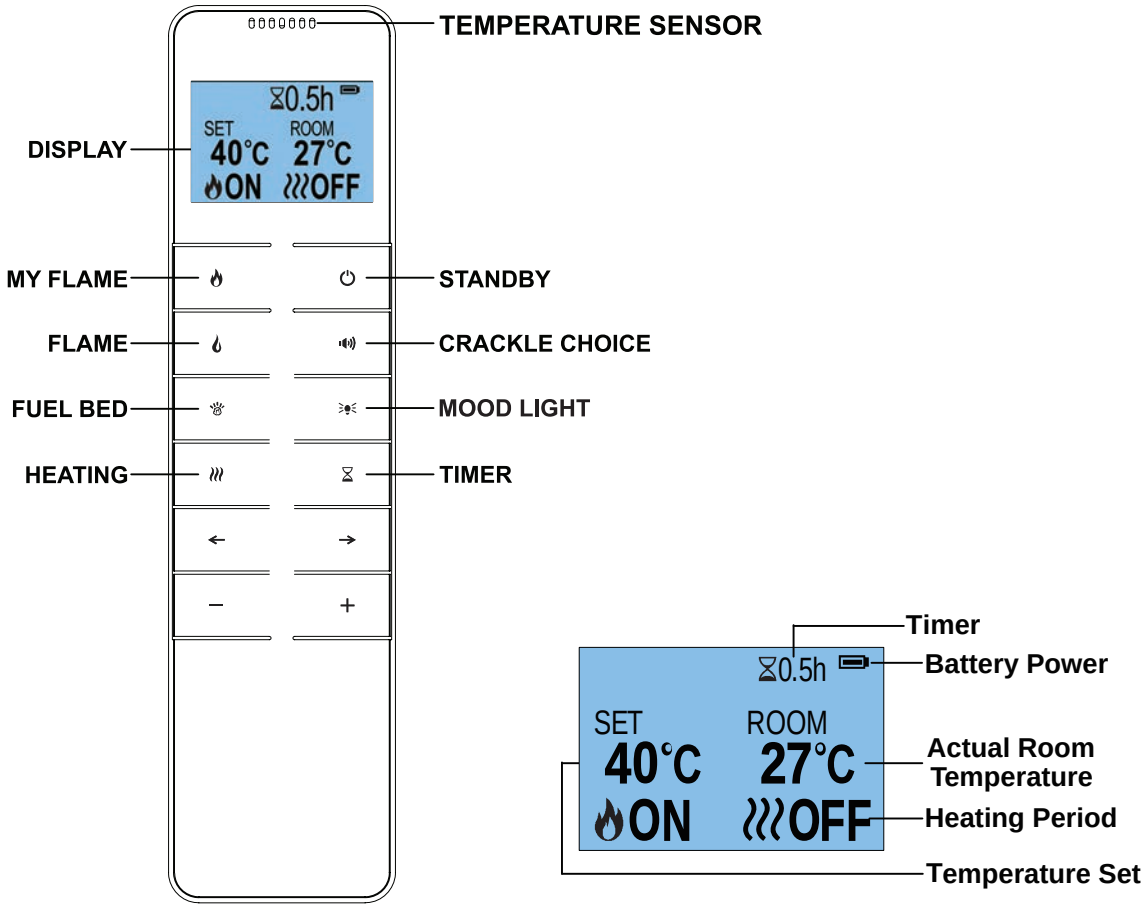

NOTE

The remote control handset must be left in the same room as the appliance because it houses the thermostat that regulates heat output. Also, when using the APP, the remote must also be in the same room and have batteries fitted and working to ensure accurate temperature control.

Remote Control Setup and Pairing

The communication frequency between the appliance and remote has already been set up. If you have difficulty with the remote communicating with the appliance, or to pair a replacement handset, press and hold the Standby button on the appliance until you hear two beeps, then release the button. Press the Standby button ⏻ on the remote control handset and you will hear one beep. The remote is connected with the appliance.

MY Flame

Press 🔥 to enter My Flame adjustment screen.

Press ← and → to select 6 My Flame modes (+3 user defined presets if programmed).

There are 3 preset slots allocated for the user to save personalised settings. Simply choose the flame color and brightness level, the fuel color and brightness level. Once you have selected your desired combination, press and hold the My Flame button for 3 seconds until the LCD displays My Flame save to 7.

Press – or + buttons to select a slot number between 7 and 9. Press and hold 🔥 for 3 seconds to confirm the preset.

Flame Effect

Press 🔥 once to enter the flame adjustment screen.

Press ← and → buttons to select 3 different flame colors and OFF setting.
Press – and + buttons to select 5 levels of brightness.

Fuel Bed

Press once to enter the fuel bed adjustment screen.

Press ← and → buttons to select 9 different fuel bed colors and OFF setting. The ninth is the color cycle mode.
Press – and + buttons to select the 5 levels of brightness.

Mood Light

Note: If mood lights are not connected, please ensure the brightness is set to zero.

Press to enter the mood light adjustment screen.

Press ← and → buttons to select 14 different mood light colors and OFF setting. The 14th is the color cycle mode.

Press – and + buttons to select 5 levels of brightness.

Crackle Choice

Press to open sound effect menu.

Press ← and → buttons to select between 2 sound effects.

Press – and + buttons to adjust 5 levels of volume and OFF.

Heater Mode

Press to cycle through the heat output options: ON-OFF-AUTO **(AUTO only functions with the mobile application, once it has been programmed)**.

To switch between °C/°F, press and hold ← or → button for 3 seconds.

Press – and + buttons to adjust the temperature you want the room to reach, from 5 to 40 °C (41 to 104 °F).

NOTE: It is normal for the fan heater to stop running for periods of time. This happens because the room temperature is at or above the temperature set on the remote control.

Timer Mode

NOTE: This setting is only for operating in normal mode. It allows the appliance to go into standby after a set period of time.

Press to cycle through the settings from 0.5 hour to 10 hours, and then OFF.

Adaptive Start Control

Learning from the previous heating cycle enables the appliance to judge the appropriate advance time to turn on the heater to ensure that the set temperature is reached at the set time. For example, if your timer is set to start at 18:00 (6 pm) and temperature is set to 23 °C (73 °F), the fire may for example come on at 17:30 (5:30 pm) to ensure the room is 23 °C at 18:00.

Window Open Detection

When the transmitter detects a rapid drop in room temperature, it will be judged as a window open, the warning icon will be displayed and the heater will be turned off automatically.

After the indoor temperature has risen or a manual override of the warning (by operating remote control) has been done, the fire will return to normal working state.

Important Safety Information for Remote Control

- To remove the batteries, open the back cover of the remote control handset and replace with new ones. Pay attention to the positive and negative poles.
- Two AAA alkaline batteries are required for the remote control.
- Exhausted batteries are to be removed from the appliance and safely disposed of.
- These non-rechargeable batteries are not to be recharged.
- Different types of batteries or new and used batteries are not to be mixed.
- Batteries are to be inserted with the correct polarity.
- If the appliance is to be stored unused for a long period, the batteries should be removed.
- The supply terminals are not to be short-circuited.

Operating Instructions

Remote Control

Resetting the Thermal Cut Out

The appliance is fitted with an Electric Safety Control (E.S.). This is a safety device, which switches off the fire if, for any reason, the appliance overheats, e.g. when covered. If the heater stops operating while the flame effect continues working normally, this indicates that the E.S. Control is in operation.
The E.S. Control can only be reset after the appliance has cooled down, and the appliance has been reset. To reset the E.S. Control proceed as follow:

1. Switch off the appliance (Manual switch) and leave it off for approximatively 10–15 minutes.
2. Shut-off the power supply to the appliance at the electric panel or disconnect the appliance's plug from the socket.
3. Remove any obstruction to the fan heater outlet or fan blades, etc.
4. Reconnect the power and switch on the appliance and the E.S. Control will be reset.
5. Ensure the appliance is functioning correctly. If the E.S. Control operates again, the appliance should be checked by a competent electrician.

App Control

APP CONTROL

Visit your APP store for iOS or Android to download the **C&JsmartFIRE** APP. Or use the QR code on this page. Follow your device's onscreen instructions to create an account. Once installed, follow the procedure below to pair the device with your appliance.

1. Start the APP and click "Add Device" on screen. Click "smartFIRE", then select WiFi network and enter the password.
   NOTE: Your device must also be connected to the same home network that you wish to connect the appliance to.
2. Ensure the appliance is powered on, then press and hold the WiFi button on the appliance until you hear 3 beeps at EZ mode. At the same time, the WiFi indicator and the fuel bed will blink.
3. Follow the instructions on APP to choose the EZ mode and confirm the indicator is flashing. Click Next and start to add the device.

   If failed at EZ mode, try AP mode. Press the WiFi button; you will hear 3 beeps. Keep pressing until you hear another 5 beeps to enter AP mode, and then follow the instructions on APP to choose the AP mode and confirm the indicator is flashing. Click "Go to Connect" and choose a WiFi called "SmaltLife-XXX" and start to add the device.

We have created a very detailed APP Operation instructions and videos to guide you through the process of loading the APP, Creating an account, Pairing your appliance to your smart phone and operating the appliance. Scan the QR code below or the one on the back of the remote to be taken to the operation instructions or the videos.

APP Download

Operation instruction and Video

Maintenance

WARNING

Before any maintenance or cleaning of the exterior of the fireplace, the unit should be disconnected from the power supply AND cooled off.

ALWAYS turn the heater OFF and unplug the power cord from the outlet before cleaning, performing maintenance, or moving this fireplace. Failure to do so could result in electric shock, fire, or personal injury.

Remote Control Battery Replacement

When the batteries are at full power, the battery symbol will show .

When the batteries are half full, the battery symbol will show .

When the batteries are out of power and need replacing immediately, the battery symbol will show .

Cleaning the Fireplace

Cleaning or polishing products are not recommended. Fingerprints or other marks on the front glass panel can be removed by a piece of soft, damp, lint-free cloth with a good quality household glass cleaner.

The front glass panel should always be completely dried with a clean, lint-free cloth or paper towel. NEVER immerse in water or spray with water. Doing so could result in electric shock, fire, or personal injury.

Caution

Abrasive cleaners should not be used on the glass panel.

Liquids should not be sprayed directly onto any surface of the unit.

Service Parts List

	Item	Qty	Part number
1	Master Control Unit (Heater Unit + PCB Unit)	1	9644
2	Front Glass Panel	1	9645
3	Rear Screen	1	9646
4	Downlight Unit	1	9647
5	Left Panel Front	1	9648
6	Left Panel Rear	1	9649
7	Flame Screen	1	9650
8	Right Panel Front	1	9651
9	Right Panel Rear	1	9652
10	Inlet Plate	4	9653
11	Drive Board	1	10529
12	Control Panel	1	9655
13	Flame Effect LED Board	1	9656
14	Motor	1	9657
15	Flame Effect Spindle	1	9658
16	Remote Control	1	9659
17	Fuel Bed Effect Spindle	1	9660
18	Magnetic Sucker	1	9661
19	Sucker	1	9662
20	Fuel bed	1	9663
21	Front Fuel Bed Led Board	3	9664
22	Fuel Bed Effect Led Board	2	9666
	Power Cord	1	9669
	Log set BLK	1	9629
	Log set DWK	1	9627
	Log set SWK	1	9628

Service Parts

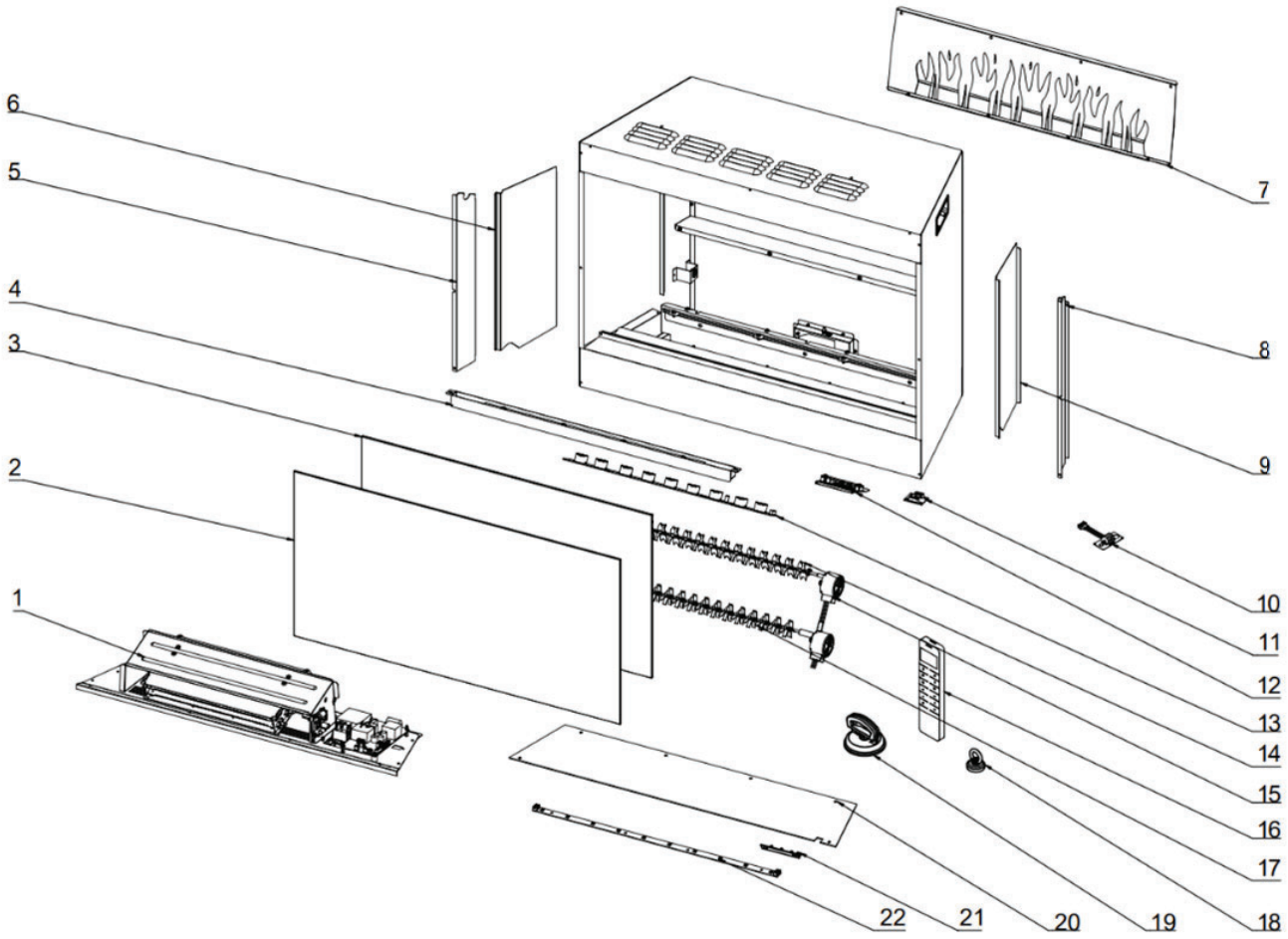

Wiring Diagram

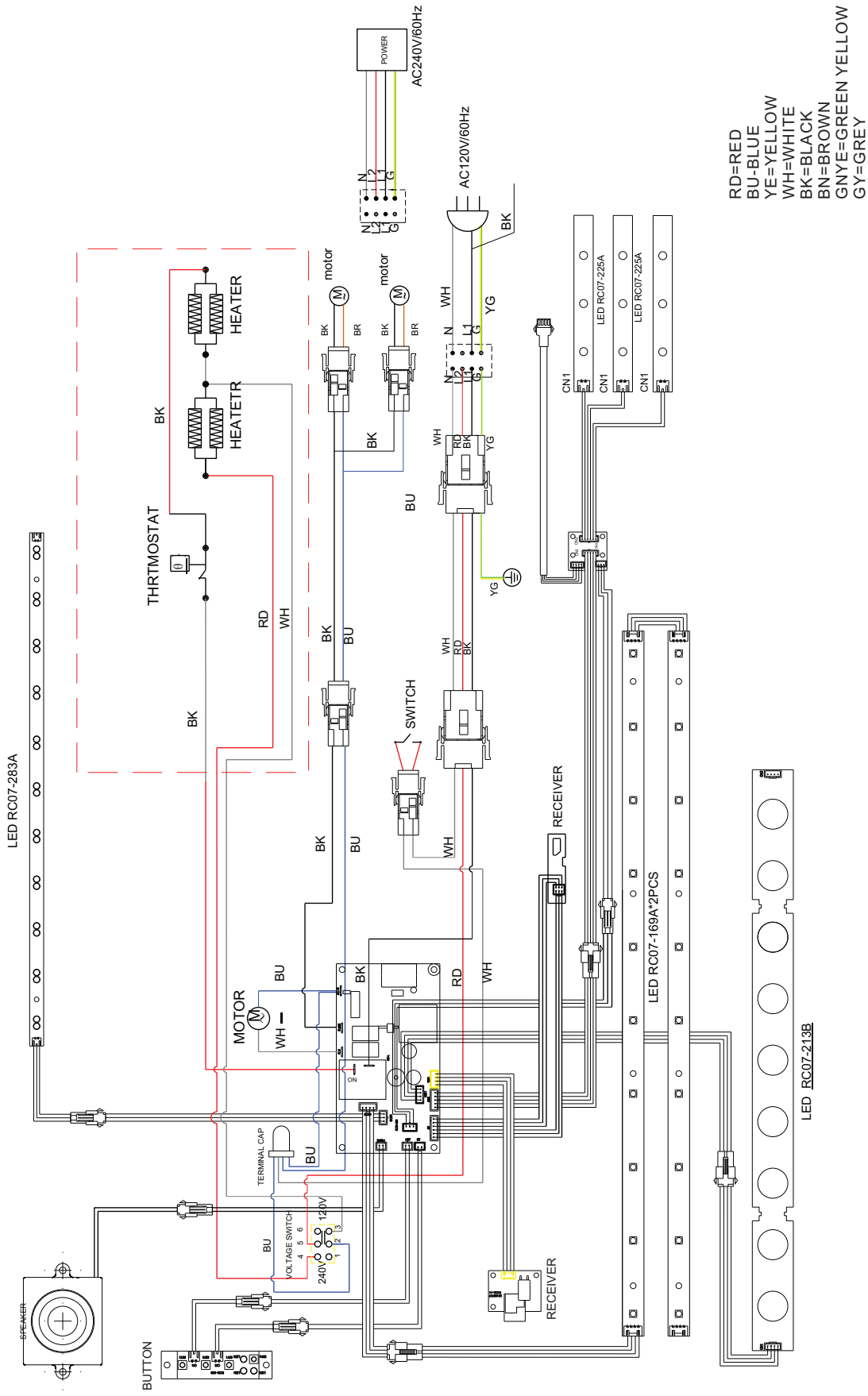

Valor Electric Fireplaces Warranty

Your new appliance is covered by a limited warranty. For all information concerning this warranty and to register your appliance, scan the QR code below or go to valorfireplaces.com/warranty.

Important—Register your warranty

Registration of your Valor appliance is required and should be done within 90 days of purchase. It can be completed by scanning the QR code below or by visiting valorfireplaces.com/warranty.

Completing your registration enables us to properly address any warranty or service-related concerns that you may have. This information is strictly for customer service and warranty purposes, and will never be shared with any third party.

Distributed in Canada and USA exclusively by

Valor Fireplaces — Head Office
#190, 2255 Dollarton Hwy, North Vancouver, BC V7H 3B1
Phone: 604.984.3496
Email: info@valorfireplaces.com

Manufactured by Charlton & Jenrick Ltd
Unit D, Stafford Park 2, Telford, Shropshire, TF3 3AR, UK.
Tel: ++ 44 1952 200 444 Fax ++ 44 1952 200 480
w: www.charltonandjenrick.co.uk
e: sales@charltonandjenrick.co.uk