Installation Manual

H5

Direct Vent Zero Clearance
Gas Fireplace
natural gas 1100MN
propane gas 1100MP

Installer: Place model/serial number here.

Installer: Leave this manual with the appliance.
Consumer: Retain this manual for future reference.

⚠ WARNING:
FIRE OR EXPLOSION HAZARD
Failure to follow safety warnings exactly could result in serious injury, death, or property damage.

Do not store or use gasoline or other flammable vapors and liquids in the vicinity of this or any other appliance.

WHAT TO DO IF YOU SMELL GAS

- **Do not try to light any appliance.**
- **Do not touch any electrical switch; do not use any phone in your building.**
- **Leave the building immediately.**
- **Immediately call your gas supplier from a neighbor's phone. Follow the gas supplier's instructions.**
- **If you cannot reach your gas supplier, call the fire department.**

Installation and service must be performed by a qualified installer, service agency or the gas supplier.

⚠ DANGER

Hot glass will cause burns.

Do not touch glass until cooled.

Never allow children to touch glass.

A barrier designed to reduce the risk of burns from the hot viewing glass is provided with this appliance and must be installed for the protection of children and other at-risk individuals.

4008355-17

This appliance may be installed in an after-market permanently located, manufactured (mobile) home where not prohibited by local codes. This appliance is only for use with the type of gas indicated on the rating plate. This appliance is not convertible for use with other gases, unless a certified kit is used.

INSTALLER: Leave this manual with the appliance.

CONSUMER: Retain this manual for future reference.

Massachusetts:

The piping and final gas connection must be performed by a licensed plumber or gas fitter in the State of Massachusetts. Also, see Carbon Monoxide Detector requirements in this manual, page 72.

⚠ WARNING

This product can expose you to chemicals including Benzene, which is known to the State of California to cause cancer and birth defects or other reproductive harm. For more information go to www.P65Warnings.ca.gov.

Note: Natural gas, in its original state, contains Benzene.

This manual contains instructions to install the **ENGINE ONLY.** A trim kit is **REQUIRED** to complete the installation. A barrier screen is provided with the trim kit. **Refer to the manual supplied with the trim for installation.**

This appliance is a domestic room-heating appliance. It must not be used for any other purposes such as drying clothes, etc.

This appliance is suitable for installation in a bedroom or bed sitting room.

Ce guide est disponible en français sur demande.

NATIONAL FIREPLACE INSTITUTE NFI ADVOCATE

We recommend a US Certified National Fireplace Institute (NFI) specialist install our gas hearth products.

DESIGN CERTIFIED

CERTIFIED

The information contained in this manual is believed to be correct at the time of printing. Miles Industries Ltd. reserves the right to change or modify any information or specifications without notice. Miles Industries Ltd. grants no warranty, implied or stated, for the installation or maintenance of your heater, and assumes no responsibility for any consequential damage(s).

© Copyright Miles Industries Ltd., 2026. All rights reserved.
Designed and manufactured for Miles Industries Ltd.

Valor Fireplaces
190–2255 Dollarton Highway
North Vancouver, BC, Canada V7H 3B1
T 604.984.3496 F 604.984.0246
valorfireplaces.com

Welcome to Valor®

This appliance has been professionally installed by:
Dealer Name: _____
Phone:_____

Please read this manual BEFORE installing and operating this appliance.

Fireplace Safety 4
Specifications 6
Kits & Accessories 7
Approved Venting Components 8
Dimensions & Location 10
Planning 11
- Before Installing 11
- Overview 12
- Combustible Clearances 13
- Framing 15
  - Stud Framing 15
  - Hearth 16
  - Venting Considerations 20
  - Appliance Height in Framing 21
  - Appliance Depth in Framing 21
  - Using 1130FFK—Fixed Framing Kit 22
  - Using 1130CIK—Clean Install Kit 24
  - Using 3 or 4-Sided Trims 26
- Wall Finish 28
  - Non-Combustible Cement Board 28
  - Finishing Around Trims 28
  - Cracking Wall Finishes 29

Venting 30
- Overview 30
- Co-axial 31
  - Typical Co-axial Venting Components 31
  - Venting Chart 32
  - Restrictors 34
  - Horizontal Vent Termination Location 35
  - Vertical Vent Termination 36
- Co-linear Conversion 37
  - Applications 37
  - Existing Fireplace Preparation 37
  - Installing Into an Existing Fireplace 38
  - Partial Installation Into an Existing Fireplace 39
  - Installation Into an Adjacent Chimney 40
  - Typical Co-linear Venting Components 41

Preparation 42
- Stand-offs & Heat Shields 42
- Vent Take-Off 43
- Window Removal & Reinstallation 44
- Optional HeatShift 47
- Electrical Wiring 48

Installation 49
- With 1130FFK—Fixed Framing Kit 49
- With 1130CIK—Clean Install Kit 51
- With 3 or 4-Sided Trims 54
- Gas Supply 55
- Liners 56
- Fuel Beds 58
  - Birch Logs 1100BLK 58
  - Driftwood Kit 1100DWK 61
  - Traditional Logs 1100LSK 64
- Remote Battery and Wall Switch 67
- Remote Control Set-Up 69
  - Remote Control Initial Pairing 69
- Operation and Burner Aeration 70
- Trim and Barrier Screen 70

Wiring Diagram 71
Commonwealth of Massachusetts 72
Appendix A - Lighting Instructions Plate 74
Appendix B - Remote Control Operation 75
Appendix C - Wall Switch Operation 82
Appendix D - HeatShift System 83
Appendix E - Spare Parts 103

Fireplace Safety

This manual contains very important information about the safe installation and operation of the fireplace. Read and understand all instructions carefully before installing and operating the fireplace. Failure to follow these instructions may result in possible fire hazard and will void the warranty.

Replacement manuals are available by contacting the Valor Customer Service at 1-800-468-2567, or by visiting valorfireplaces.com.

⚠ WARNING: Extremely Hot!

Heat and flammability

- Some parts of the fireplace are extremely hot, particularly the glass windows. Use the barrier screens provided or a gate to reduce the risk of severe burns.
- The glass windows can exceed 500°F at full capacity.
- Always keep the appliance clear and free from combustible materials, gasoline, and other flammable vapors and liquids.
- Be aware of hot wall surfaces! The walls directly above the fireplace can get very hot when the fireplace heats. Although safe, it may reach temperatures in excess of 200°F (93°C) depending on choice of optional accessories. Do not touch!
- Be aware of hot hearth/floor surfaces! Any projections directly around the fireplace can get very hot when the fireplace heats. Although safe, they may reach temperatures in excess of 200°F (93°C) depending on elevation of hearth. Be careful of touching these! Temperature of projection surfaces will be reduced when barrier screen is installed.
- Some materials or items, although safe, may discolor, shrink, warp, crack, peel, and so on because of the heat produced by the fireplace. Avoid placing candles, paintings, photos and other combustible objects sensitive to heat or furniture within 36 inches (0.9 m) around the fireplace.
- Due to it high temperatures, the appliance should be located out of traffic areas and away from furniture and draperies.
- Clothing or flammable material should not be placed on or near the appliance.

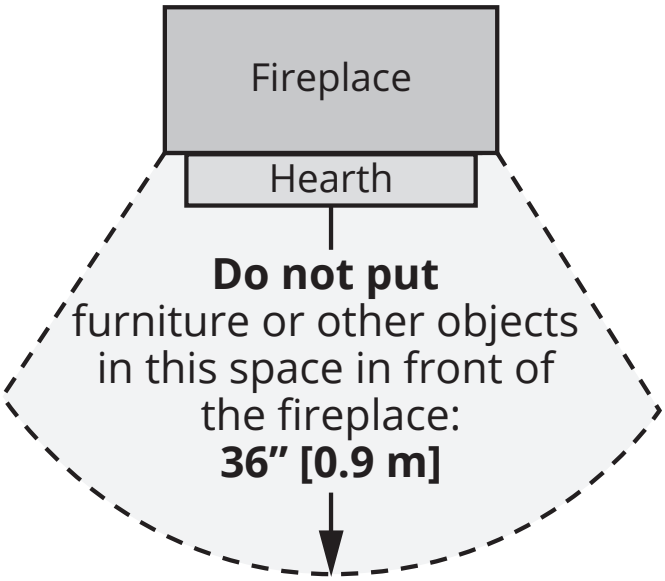

Barrier Screen and Safety

- A barrier designed to reduce the risk of burns from the hot viewing glass is provided with this appliance and shall be installed for the protection of children and other at-risk individuals.
- Children and adults should be alerted to the hazards of high surface temperature and should stay away to avoid burns or clothing ignition.
- Young children should be carefully supervised when they are in the same room as the appliance. Toddlers, young children, and others may be susceptible to accidental contact burns. A physical barrier is recommended if there are at-risk individuals in the house. To restrict access to a fireplace or stove, install an adjustable safety gate to keep toddlers, young children, and other at-risk individuals out of the room and away from hot surfaces.
- Any safety screen, guard, or barrier removed for servicing an appliance must be replaced prior to operating the appliance.

Fireplace Safety

Glass windows

WARNING

Do not operate this appliance with the glass front removed, cracked, or broken.

Do not strike or slam the glass front.

Replacement of the glass front should be performed by a licensed or qualified service person.

- The glass front assemblies must be in place and sealed before the unit can be placed into safe operation.
- The glass front assemblies must only be replaced as complete units, as supplied by the fireplace manufacturer. No substitute material may be used.
- Do not use abrasive cleaners on the glass front assemblies. Do not attempt to clean the glass when it is hot.

Venting

- This unit must be used with a vent system as described in this manual. No other vent system or components may be used.
- Never obstruct the flow of combustion and ventilation air. Keep the front of the appliance clear of all obstacles and materials for servicing and proper operation.
- This gas fireplace and vent assembly must be vented directly to the outside and must never be attached to a chimney serving a separate solid fuel burning appliance. Each gas appliance must use a separate vent system. Common vent systems are prohibited.

Intended use

- This appliance is designed and approved as a supplemental heater and provides the potential for most energy conservation when used while attended. The use of an alternate primary heat source is advisable.
- This unit is not for use with solid fuel.
- Do not use this heater as a temporary source of heat during construction.

Installation and Servicing

- Installation and repair should be done by a qualified service person. The appliance should be inspected before use and at least annually by a professional service person. More frequent cleaning might be required due to excessive lint from carpeting, bedding material, et cetera. It is imperative that control compartments, burners, and circulating air passageways of the appliance be kept clean.
- Do not use this appliance is any part has been under water. Immediately call a qualified service technician to inspect the appliance and to replace any part of the control system and any gas control that has been under water.

WARNING

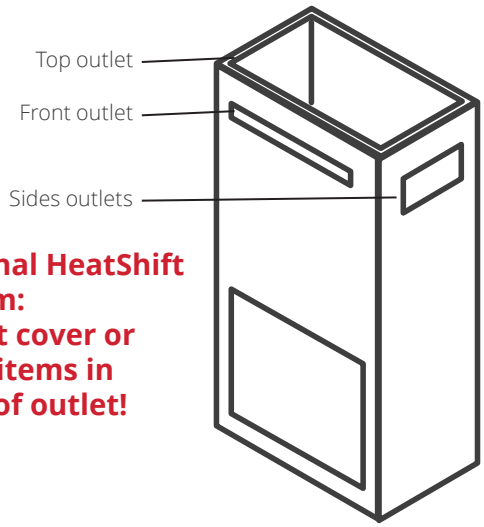

Optional HeatShift System:
Do not cover or place items in front of outlet!

Specifications

Approval & Codes

This appliance is certified to ANSI Z21.88/CSA 2.33 American National Standard / CSA Standard for Vented Gas Fireplace Heaters for use in Canada and USA, and to CGA 2.17-M91 High Altitude Standard in Canada. This appliance is for direct vent installations.

This appliance complies with CSA P.4.1-15 Testing method for measuring annual fireplace efficiencies.

The installation must conform to local codes or, in the absence of local codes, with the National Fuel Gas Code, ANSI Z223.1/NFPA 54 or the Natural Gas and Propane Installation Code CAN/CGA-B149.1. Only qualified licensed or trained personnel should install this appliance.

This appliance must be electrically grounded in accordance with local codes, or, in the absence of local codes, with the National Electrical Code, ANSI/NFPA 70 or the Canadian Electrical Code, CSA C22.1.

Ratings

Model	1100MN	1100MP
Gas	Natural	Propane
Altitude (Ft.)*	0-4,500 feet*	
Input Maximum (Btu/h)	30,000	30,000
Input Minimum (Btu/h)	16,000	16,000
Manifold Pressure (in w.c.)	3.5”	9”
Minimum Supply Pressure (in w.c.)	5”	11”
Maximum Supply Pressure (in w.c.)	10”	14”
Main Burner Injector Marking	36 DMS	51 DMS
PSE Pilot Injector Marking	BL22N	BL14LP
Min. Rate By-Pass Screw	185	125

*High Altitude Installations

Input ratings are shown in BTU per hour and are certified without deration for elevations up to 4,500 feet (1,370 m) above sea level.

For elevations above 4,500 feet (1,370 m) in USA, installations must be in accordance with the current ANSI Z223.1 and/or local codes having jurisdiction. Heating value of gas in some areas is reduced to compensate for elevation—consult your local gas utility to confirm.

For installations at elevations above 4,500 feet (1,370 m) in Canada, please consult provincial and/or local authorities having jurisdiction.

Supply Gas

Heater engines 1100MN is used with natural gas.

Heater engines 1100MP is used with propane gas.

The supply pressure must be between the limits shown in the Ratings section.

The supply connection is 3/8” NPT male and located on the right hand side of the firebox.
A shut-off valve (not supplied) is required on the supply line to isolate the unit during service.
See Gas Supply on page 55 for details.

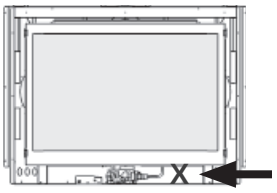

Conversion Kits

The 1100M is supplied as natural gas or propane gas and is field convertible between fuels. See instructions packaged with the conversion kits for further information.

Electrical

The 1100M is designed to run on battery power and does not require an electrical power source to operate as a heater. However, it requires electrical power to operate optional 1195CFK Circulating Fan Kit, or GV60WIFI WiFi module.

⚠ WARNING

NO ELECTRICAL CONNECTION ALLOWED for any outdoor installation!

Outdoor Conversion Kit

The 1100M models are supplied standard for indoor applications and may be adapted for installation in specific “outdoor” applications protected from weather as defined in the GV60CKO outdoor conversion kit manual.

Specifications

HeatShift™System—optional

The 1100M is designed to allow the installation of the optional HeatShift System, a convection system that redistributes the warm air flow away from the fireplace opening to a more desirable location using natural convection, without use of a fan.

The warm air flow may be relocated to a position higher up the wall, or even to another room. The result is much cooler wall temperatures above the fireplace opening for locating televisions, artwork, etc.

Please note that the framing and mantel clearances are affected by the installation of the HeatShift System. Refer to Appendix D - HeatShift System on pages 83-101 for more information.

Kits & Accessories

Required Kits

Fuel Beds (choose one)		
1100DWK	Driftwood Kit	
1100BLK	Birch Log Kit	
1100LSK	Traditional Log Kit	
Ceramic Liners (choose one)		
1115LSL	Ledgestone Liners	
1125FBL	Fluted Black Liners	
1160PBL	Plain Black Liners	
1170RGL	Reflective Glass Liners	
1175HBL	Herringbone Liners	
1185GBL	Grey Brick Liners	
Trims		**Barrier Screens**
1130CIK	Clean Framing Kit	4008437
1130FFK	Fixed Framing Kit	4005632
1135TSB	Three-Sided Trim Black	
1140FS 2	Four-Sided Trims	4006326
1184EC	Edgemont Craftsman Trims	4008798
Approved Venting Components		
See list of approved venting components next pages.		

Information accurate at the time of printing and subject to change without notice.

Optional Accessories

Gas Conversion Kits	
1100MPGKV2	Conversion to propane gas
1100MNGKV2	Conversion to natural gas
Other Accessories	
GV60CKO*	Outdoor Fireplace Conversion Kit
1195CFK*	Circulating Fan Kit
1270RBK*	HeatSplit Remote Blower Kit
LDK	HeatShift System
GV60WIFI*	WiFi Module (if no fan, requires GV60VM + H5/6-PWK)
GV60VM*	V-Module
H5/6-WPK*	WiFi Power Kit - J-box
Hearth Gate	Hearth Gates such as Cardinal's VersaGate are available at retail stores carrying safety products for children.

⚠ WARNING

*** NO ELECTRICAL CONNECTION ALLOWED for any outdoor installation!**

Approved Venting Components

Approved Direct Vent Suppliers for Valor Models 1100							
Venting Parts Description			Venting Parts Code / availability by Manufacturer				
			DURA-VENT	SELKIRK	ICC EXCEL DIRECT	MILES INDUSTRIES	BDM
Termination Caps	Horizontal	Standard Co-axial	46DVA-HC	4DT-HC	TM-4HT	658DVK2	DVR6-HC
		Deluxe Co-axial	—	—	TM-4RHT	—	DVR6-HCP
		High Wind Co-axial	—	—	—	—	—
	Vertical	Standard Co-axial	46DVA-VC	4DT-VT	—	—	DVR6-VCH DVR6-VCSB
		High Wind Co-axial	46DVA-VCH	—	TM-4SVT	—	—
		Extended Co-axial	46DVA-VCE	—	—	—	—
		Co-linear	46DVA-CL33 46DVA-CL34 46DVA-CL33H 46DVA-33P 46DVA-CL34P	—	TM-IVT	559CLT	940033B 940034B 940033HWS 940033RD
	Snorkel, 14” Rise		46DVA-SNK14	4DT-ST14	TM-4ST14	—	DVR6-SNK14
	Snorkel, 36” Rise		46DVA-SNK36	4DT-ST36	TM-4ST16	—	DVR6-SNK36
Vent Adapters		Co-axial-to-Co-linear Adapter	46DVA-GCL 46DVA-GCL34 46DVA-CLAA 46DVA-34CLAA	ADT-AAC	TM-4CAA	1156CLA	DVR6-A34
		Co-linear-to-Co-axial Adapter	46DVA-GK 46DVA-CT 46DVA-CLTA 46DVA-34CLTA	ADT-CTB	TM-4CTA	—	DVF34-A6
		DV to B-Vent Adapter	—	—	—	DVA5BV	—
Aluminum Flexible Liner		3” or 4” diameter	NOTE: 2-ply liner approved to CAN/ULC S635 suitable for venting gas appliances. As manufactured by Z-Flex, Flexmasters or others.				
			2280 Series	AF3-35L AF4-35L	TM-ALK33 TM-ALK43 TM-ALT33 TM-ALT43	—	952703 952704
Adjustable Pipe Length and Pipe Extensions 4” x 6-5/8”		Galvanized or Black	46DVA-08A 46DVA-08AB (3” to 7”)	—	—	—	DVR6-08A DVR6-08AB
		Galvanized or Black	46DVA-16A 46DVA-16AB (3” to 14-1/2”)	ADT-AJ12 ADT-AJ12B (4” to 10”)	TC-4DLS1 TC-4DLS1B	—	DVR6-16A DVR6-16AB
		Galvanized or Black	46DVA-17TA 46DVA-17TAB (11” to 17”)	ADT-TL14 ADT-TL14B (14” to 22”)	TC-4DLS2 TC-4DLS2B (1-7/8” – 21”)	—	—
		Galvanized or Black	46DVA-24TA 46DVA-24TAB (17” to 24”)	ADT-TL38 ADT-TL38B (38” to 70”)	TC-4DLA30 TC-4DLA30B (16.5” – 29”)	—	—
		Coaxial Flex	46DVA-36FF 46DVA-60FF 46DVA-120FF	—	—	—	—
DV Elbows	30°	Galvanized	46DVA-E30	—	—	—	—
	45°	Galvanized	46DVA-E45 (swivel)	4DT-EL45	TE-4DE45	—	DVR6-E45
		Black	46DVA-E45B (swivel)	4DT-EL45(B)	TE-4DE45B	—	DVR6-E45B
	60°	Galvanized	46DVA-E60	—	—	—	—
	90°	Galvanized	46DVA-E90 (swivel)	4DT-EL90	TE-4DE90	—	DVR6-E90
		Black	46DAV-E90B (swivel)	4DT-EL90(B)	TE-4DE90B	—	DVR6-E90B

Approved Venting Components

Venting Parts Description			Venting Parts Code / availability by Manufacturer				
			DURA-VENT	SELKIRK	ICC EXCEL DIRECT	MILES INDUSTRIES	BDM
Pipes 4" x 6 5/8" (ID x OD)	6" long	Galvanized	46DVA-06	4DT-06	TC-4DL6	—	DVR6-06
		Black	46DVA-06B	4DT-06(B)	TC-4DL6B		DVR6-06B
	7" long	Galvanized	—	—	—	—	—
		Black					
	9" long	Galvanized	46DVA-09	4DT-09	TC-4DL9	—	DVR6-09
		Black	46DVA-09B	4DT-09(B)	TC-4DL9B		DVR6-09B
	12" long	Galvanized	46DVA-12	4DT-12	TC-4DL1	—	DVR6-12
		Black	46DVA-12B	4DT-12(B)	TC-4DL1B		DVR6-12B
	18" long	Galvanized	46DVA-18	4DT-18	—	—	DVR6-18
		Black	46DVA-18B	4DT-18(B)			DVR6-18B
	24" long	Galvanized	46DVA-24	4DT-24	TC-4DL2	—	DVR6-24
		Black	46DVA-24B	4DT-24(B)	TC-4DL2B		DVR6-24B
	36" long	Galvanized	46DVA-36	4DT-36	TC-4DL3	—	DVR6-36
		Black	46DVA-36B	4DT-36(B)	TC-4DL3B		DVR6-36B
	48" long	Galvanized	46DVA-48	4DT-48	TC-4DL4	—	DVR6-48
		Black	46DVA-48B	4DT-48(B)	TC-4DL4B		DVR6-48B
Flashings	Roof Flashing 0/12-6/12		46DVA-F6	4DT-AF6	TF-4FA	—	DVR6-AF012
	Roof Flashing 7/12-12/12		46DVA-F12	4DT-AF12	TF-4FB	—	DVR6-AF712
	Flat Roof Flashing		46DVA-FF	—	TF-4F	—	DVR6-TCF
	Masonry Flashing		—	—	TF-4MF	559FSK	—
	New Siding Flashing		—	—	—	658NSFK	—
Various Venting System Parts	Wall Thimble		46DVA-WT	4DT-WT1	TM-4WT	—	DVR6-WTU
	Storm Collar		46DVA-SC	4DT-SC	TM-SC	—	DVT68-SC
	Decorative Plate		46DVA-DC	—	TM-4TR TM-4TP	—	DVR6-DC
	Ceiling Support	Cathedral	46DVA-CS	4DT-CCS	TM-4SS	—	DVR6-CS
		Regular	—	4DT-CS	—	—	—
	Ceiling Firestop		46DVA-FS	4DT-FS	TM-4RDS TM-CS	—	DVR6-CFS
	Attic Radiation Shield / Firestop		46DVA-IS	ADT-AIS	TM-4AS	—	DVR6-AIS
	Wall Strap		46DVA-WS	4DTWB	TM-WS	—	DVR6-WS
	Vinyl Siding Standoff		46DVA-VSS	4DT-VSS (before siding) 4DT-VSSB (after siding)	TM-VSS	—	DVR6-VSS
	Elbow Strap / Offset Support		46DVA-ES	4DT-OS	TM-OS	—	DVR6-ES
	Terminal Guard		46DVA-WG	—	TM-HTS	845TG	DVR6-SHRD
					TM-RHTS	658TG	

Notes:
1. Follow instructions supplied with each manufacturer's components.
2. Unless otherwise specified, all the parts and assemblies from the above table are to be used with 4" x 6-5/8" pipes.
3. **Do not mix components from different vent manufacturers, except Miles Industries', approved for use with those of other manufacturers.**

Dimensions & Location

Dimensions

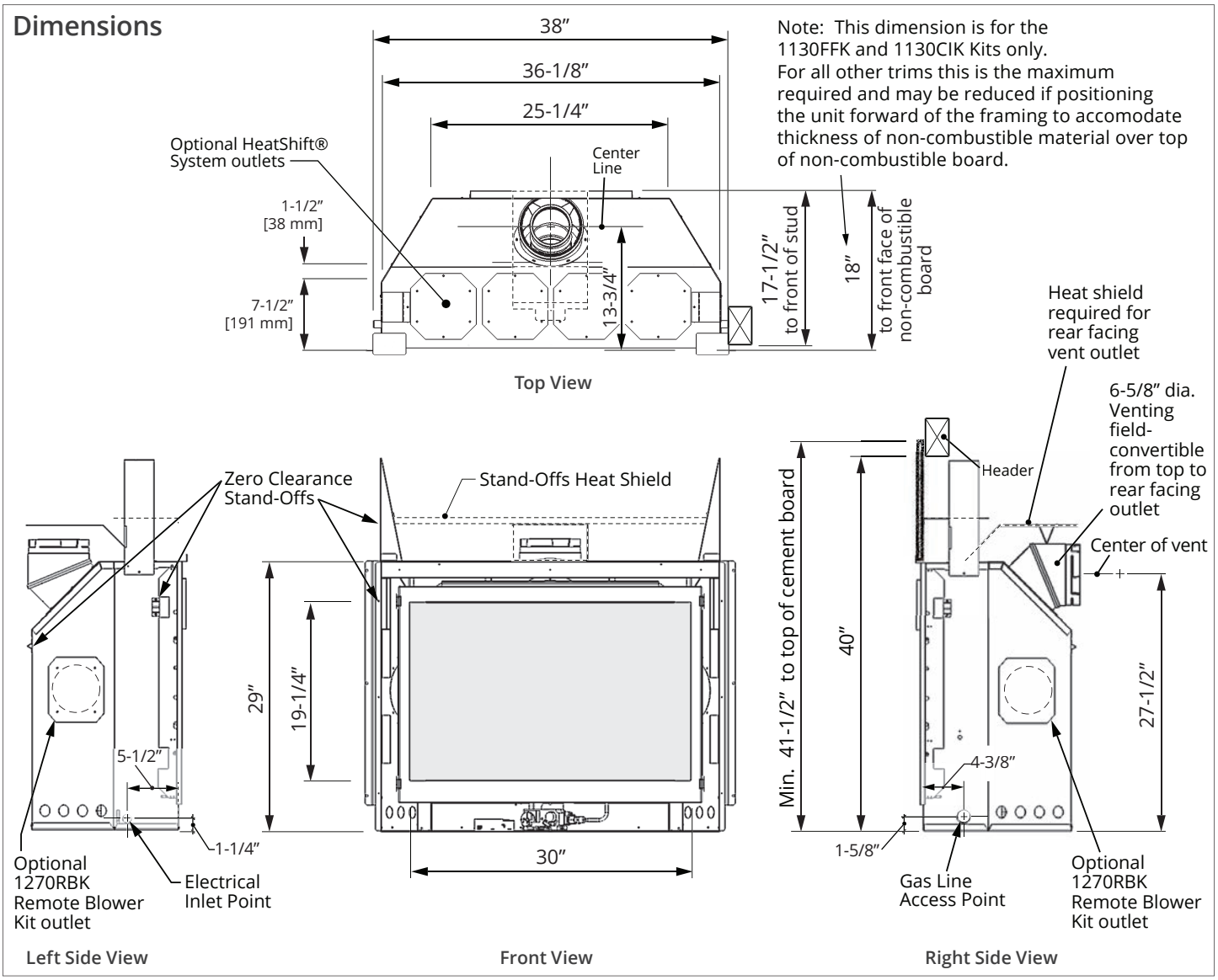

Location

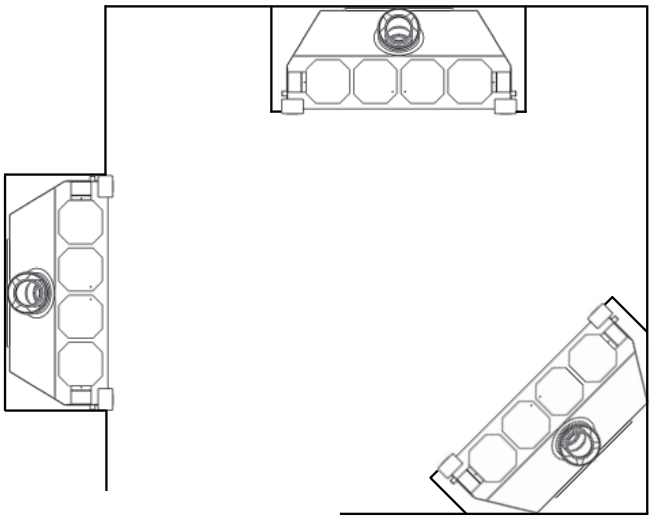

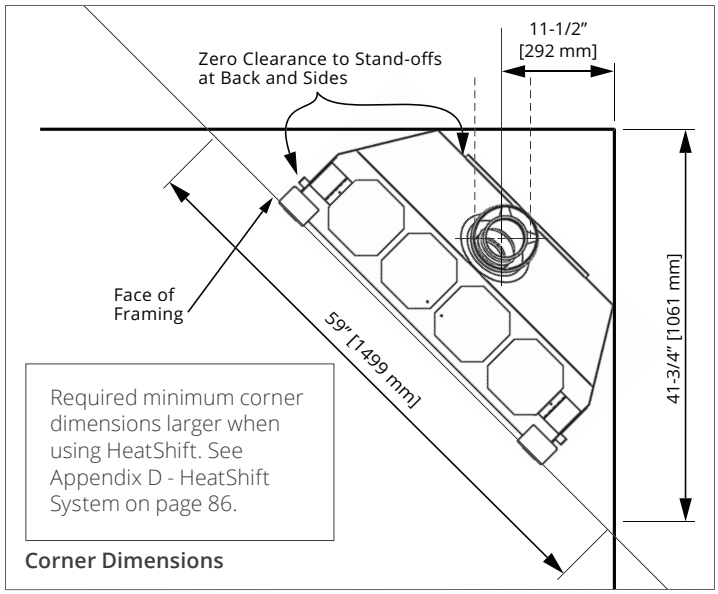

Planning

Attention

ONLY qualified licensed or trained personnel should install this appliance.

1. **BEFORE YOU START—YOU NEED TO KNOW FROM THE HOMEOWNER:**
   - Will the optional HeatShift System be used;
   - Height of the unit and hearth if used;
   - Thickness and type of wall finish around firebox opening;
   - Required accessories to install with fireplace (liners, fuel bed, trim);
   - Optional accessories if used;
   - Venting configuration.
2. Unpack the appliance, removing all items packed inside and around it. Recycle packaging.
3. Check that you have everything required for the installation, using the Pack Content sheet. Also, check that you have:
   - Fuel bed (packed separately);
   - Liner panels (packed separately);
   - Remote Battery & Wall Switch;
   - Venting accessories;
   - Gas conversion kit, if necessary;
   - HeatShift accessories, if used;
   - Electrical accessories, if necessary.
4. **Carefully read the Installer's Checklist included with the fireplace for the installation sequence. Read also this manual to have all information necessary for the installation.**

WARNING

NO ELECTRICAL CONNECTION ALLOWED for any outdoor installation!

Planning

Overview

Note: This appliance may be installed in outdoor, weather protected environments as defined in the GV60CKO Outdoor Conversion Kit instruction manual.

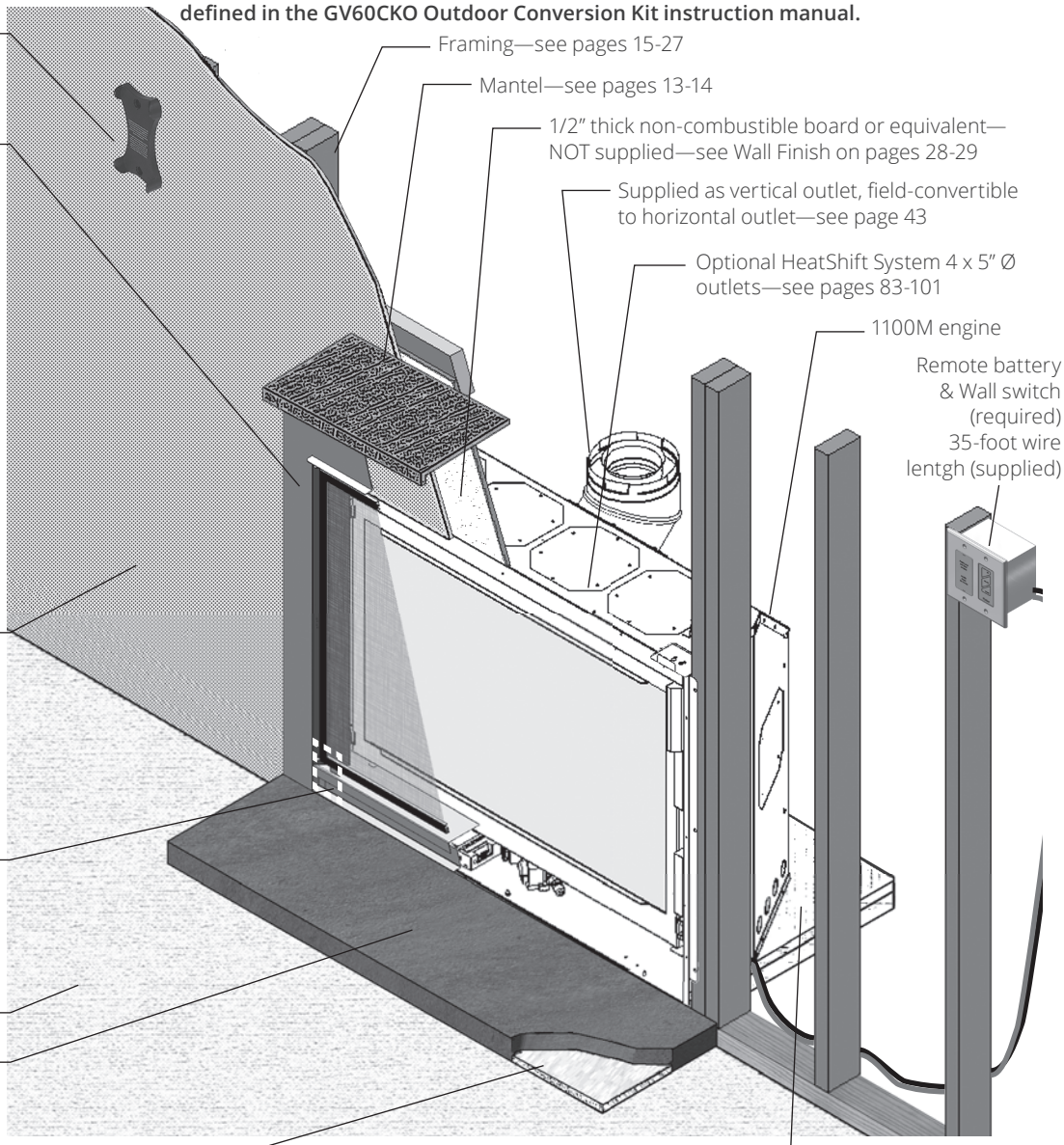

⚠ WARNING

HOT WALL SURFACES! The wall directly above the fireplace is constructed of non-combustible materials and, although safe, it may reach temperatures in excess of 200° F (93° C) depending on choice of trims. Do not touch. Finish the wall using materials suitable for these temperatures.

⚠ WARNING

HOT HEARTH SURFACES! The hearth in front of the fireplace may become very hot. Locating the appliance higher than the surface of hearth and ensuring the barrier screen is installed will reduce temperatures. Note that some materials, although safe, may deteriorate due to heat—carefully evaluate which materials to use.

Combustible Mantel—Left Side View

NOTE

Use of optional HeatShift System affects mantel and hearth clearances. See Appendix D - HeatShift System on pages 83-101.

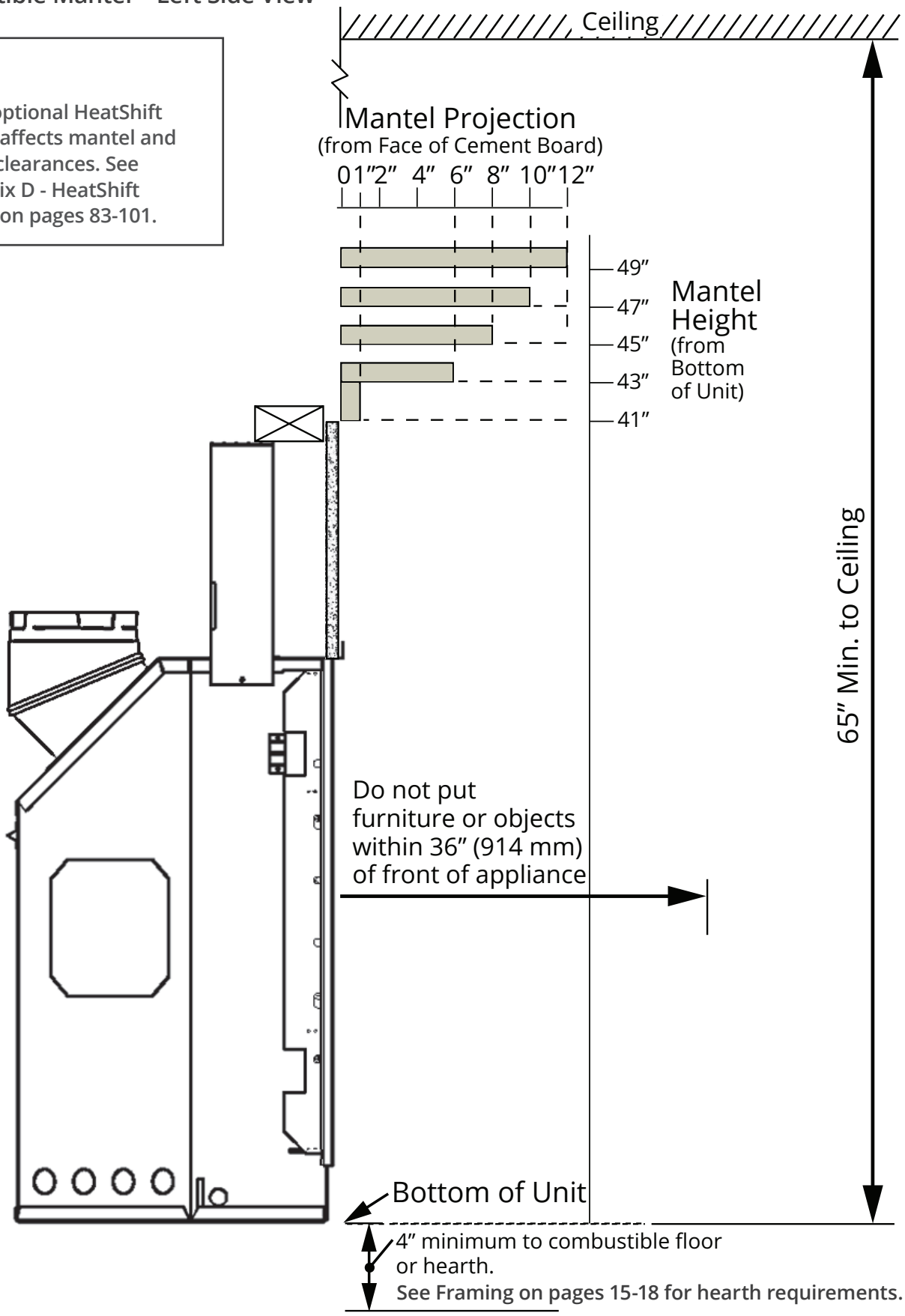

Combustible Sidewall / Mantel Leg—Top View

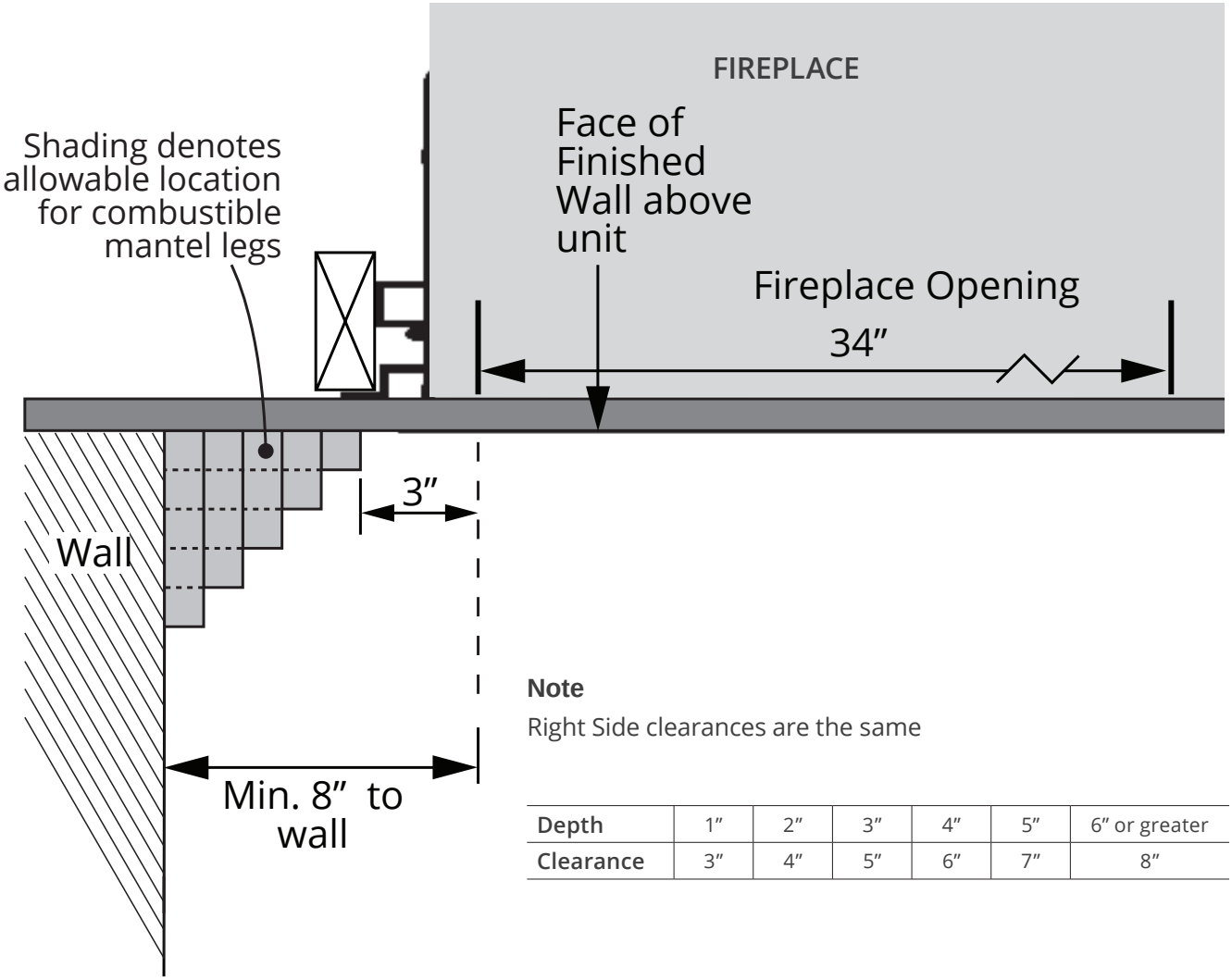

Note

Right Side clearances are the same

Depth	1″	2″	3″	4″	5″	6″ or greater
Clearance	3″	4″	5″	6″	7″	8″

Stud Framing

NOTE

Use of optional HeatShift System affects framing. See Appendix D - HeatShift System on pages 83-101.

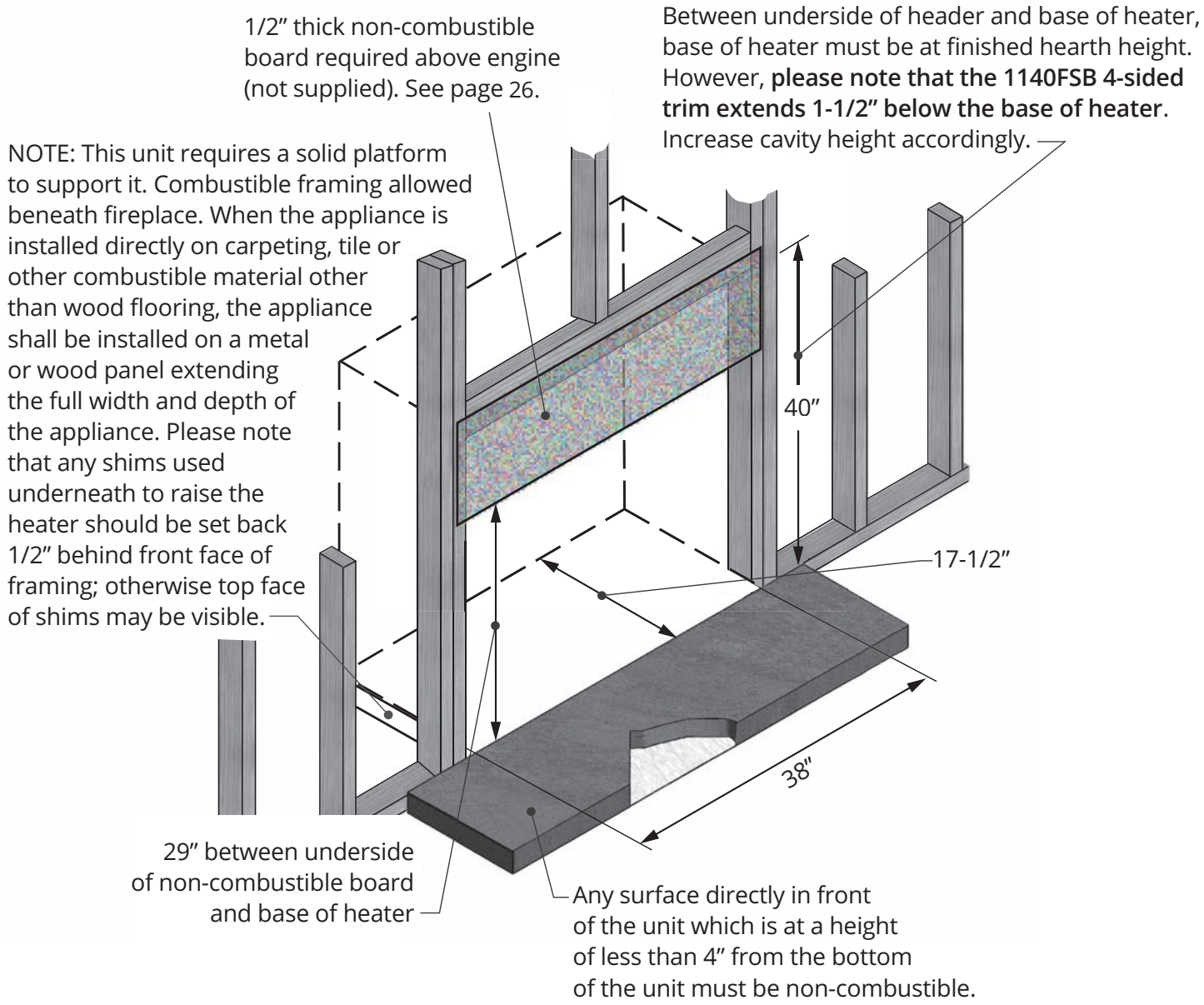

Hearth

WARNING

The H5 is a very effective radiant heater. The hearth/floor/exposed surface in front of the heater can get very hot (in excess of 200ºF). Locating the unit raised above the exposed surface and ensuring the barrier screen is installed will greatly reduce this surface's temperatures. Any exposed surface within 4 inches of the base of the heater must be constructed of non-combustible materials and utilise the insulation board supplied as a thermal break between the non-combustible exposed surface/hearth finish and the combustible construction below (see diagrams in the following pages). Note that some materials, although safe can degrade due to heat—take this into consideration when choosing materials.

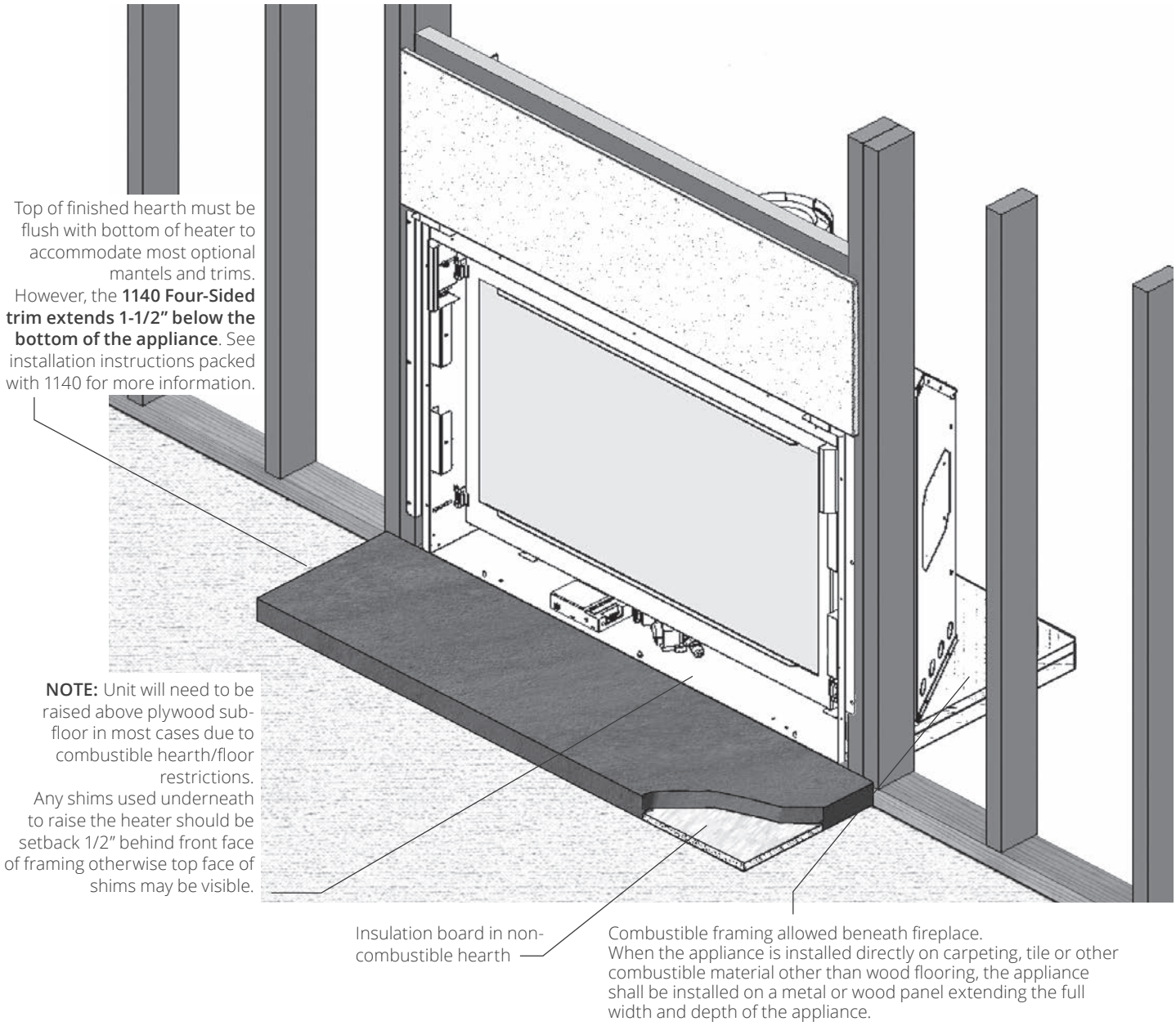

Hearth

Rules

1. A hearth is not required. However, any exposed surface in front of fireplace within 4 inches vertically of the bottom of the unit must be non-combustible and project a minimum distance as shown on page 18. Hearth/floors/exposed surface within 4 inches must have a non-combustible finish **applied over the 1/2 inch insulation board** provided with the engine. This insulation board acts as a thermal break.
2. Minimum hearth projection is determined by a combination of the height of the hearth above the surface of combustible floor or carpet and the distance between the hearth and the bottom of the fireplace.
3. Combustible baseboards (1 inch thick or less) located on the wall are acceptable provided they are located below the base of the raised fireplace.

Unit Raised Above Combustible Exposed Surface

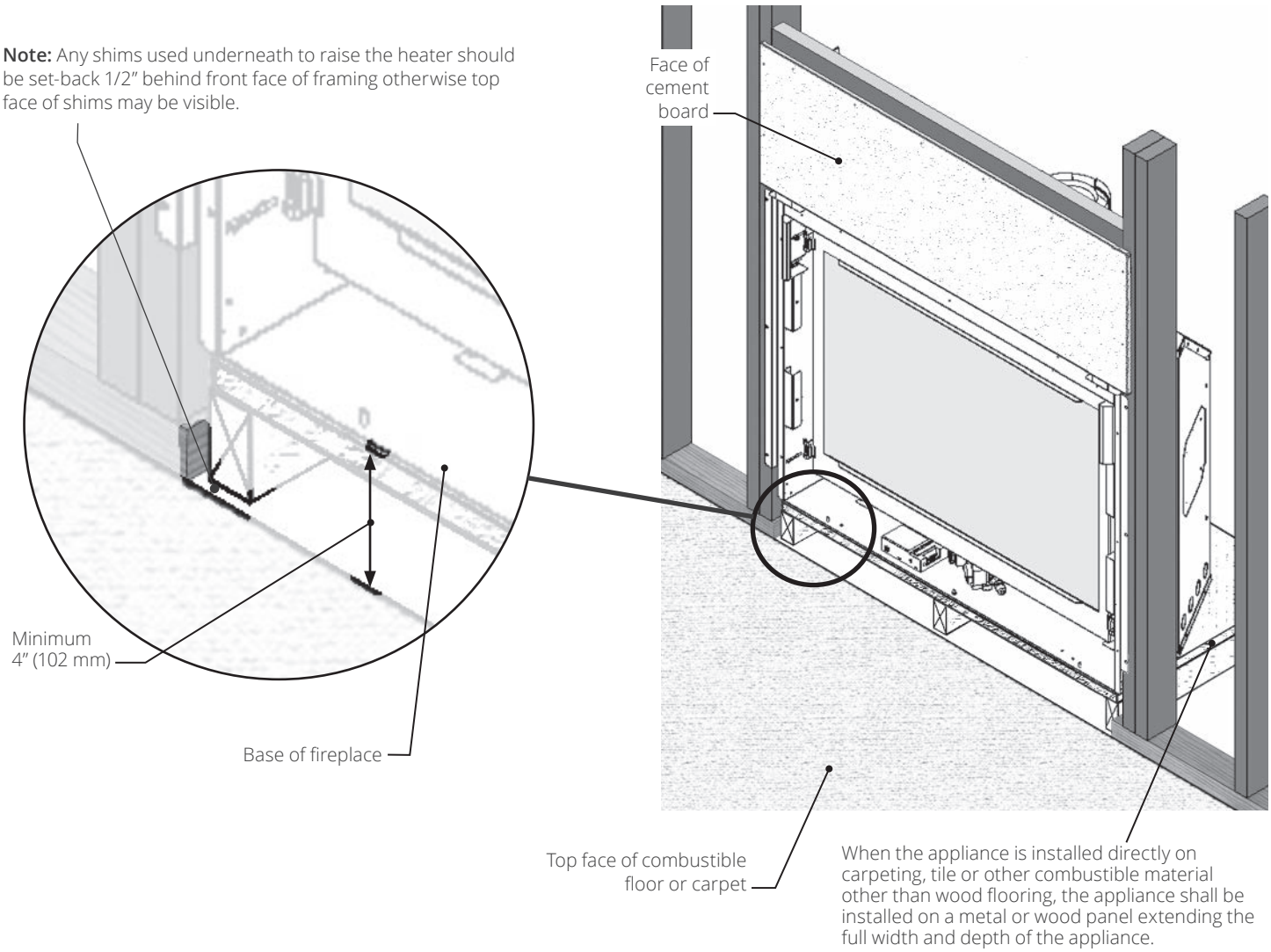

Hearth

Unit With Site-Built Non-Combustible Hearth Extending

Example: If the fireplace is raised 2" above combustible floor, the non-combustible-flush-with-bottom-of-fireplace hearth must project a min. of 6" in front of the fireplace.

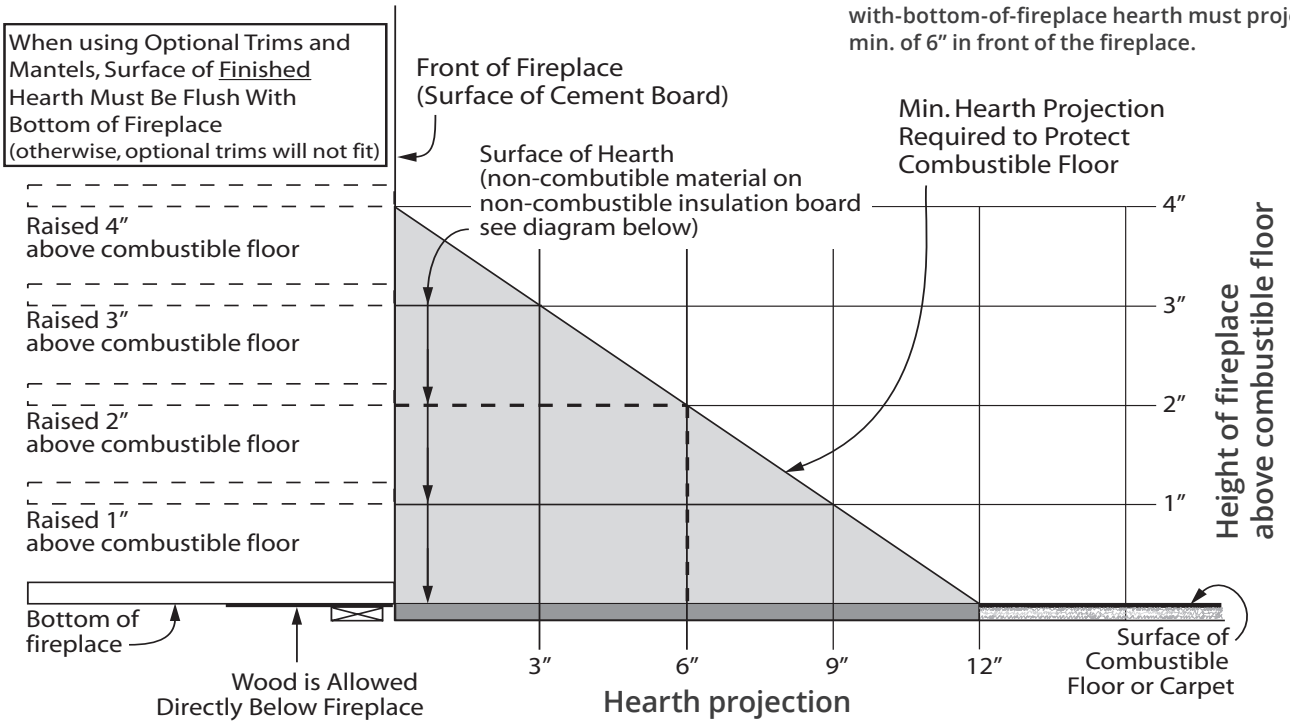

Non-combustible substrate construction detail

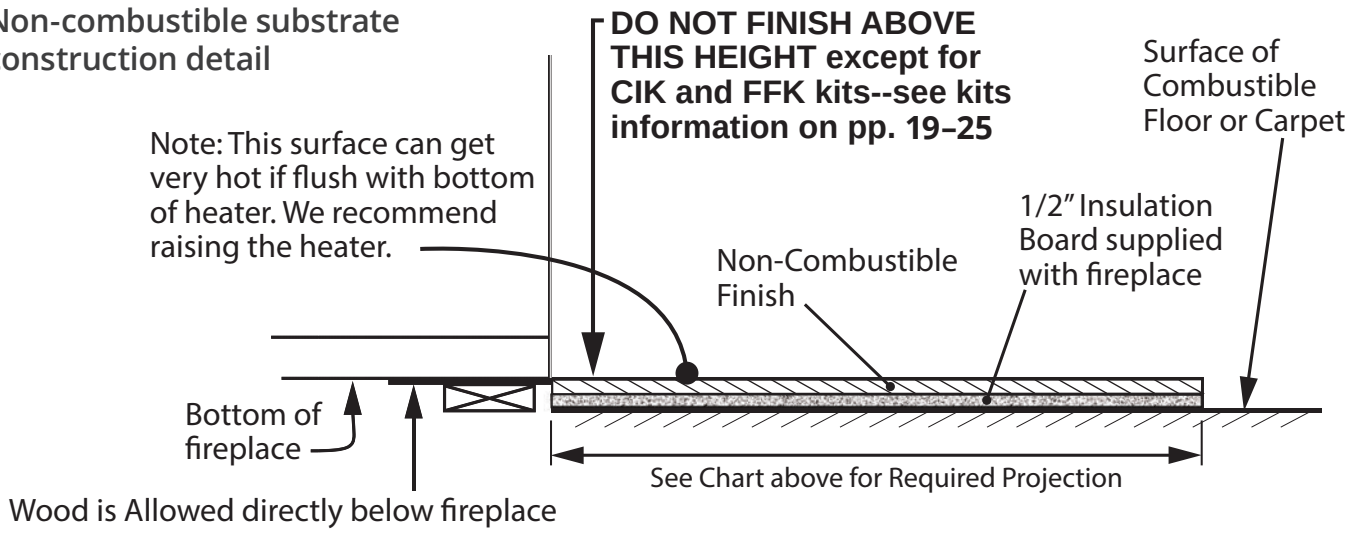

Built-In Recess Above Fireplace—Top Outlet

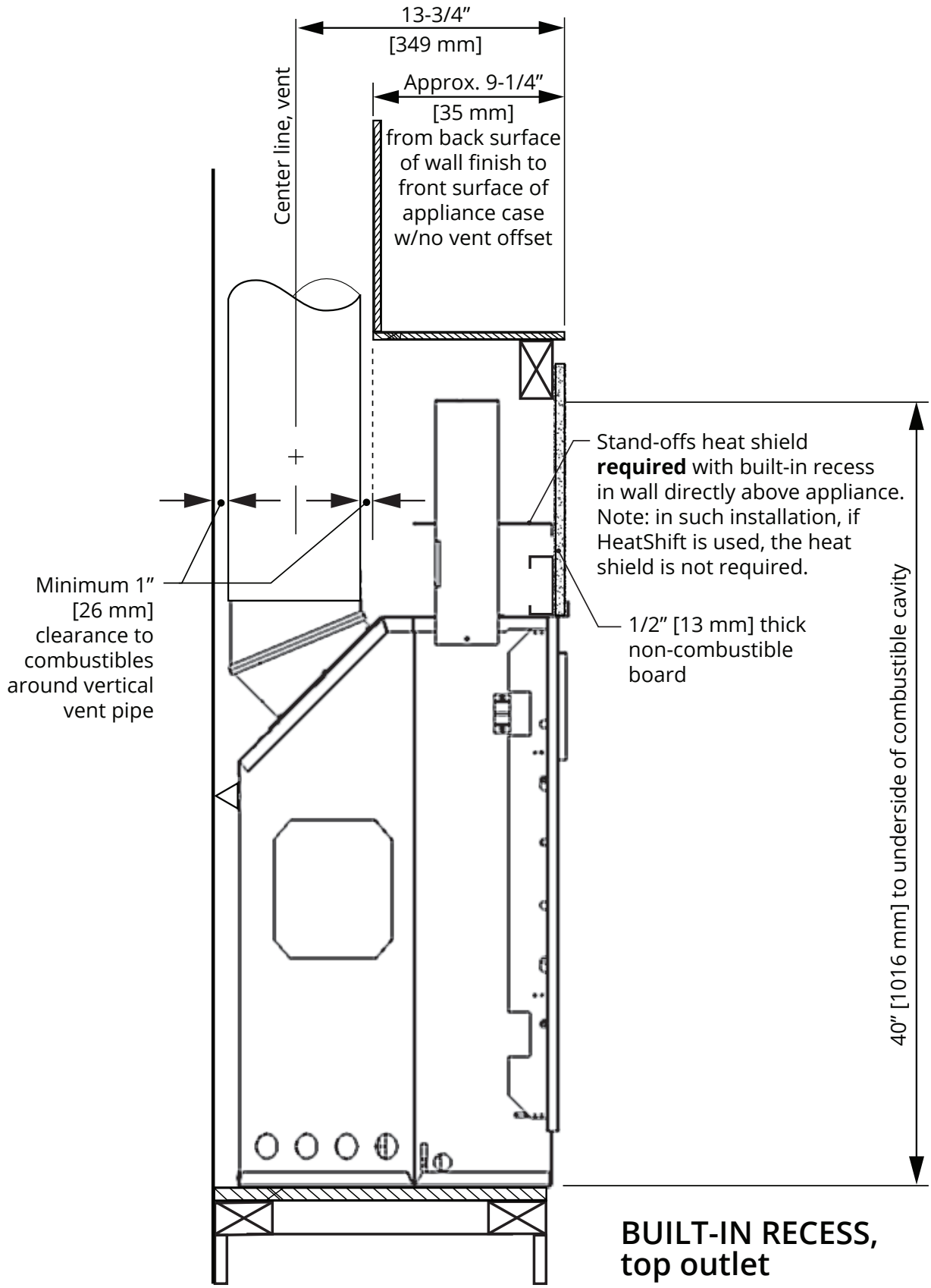

BUILT-IN RECESS, top outlet

Vertical Takeoff

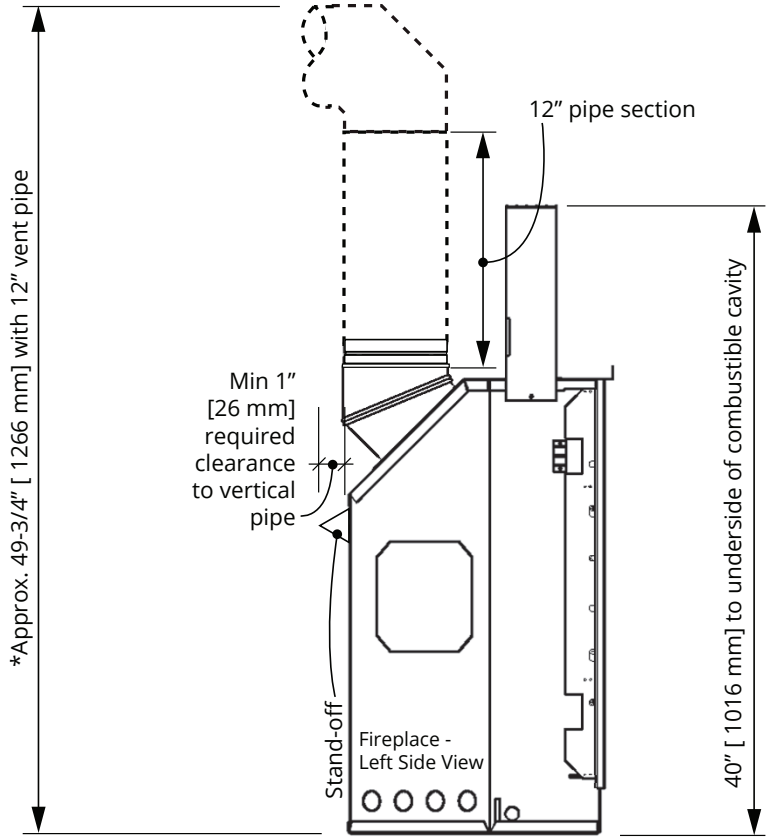

Horizontal Takeoff

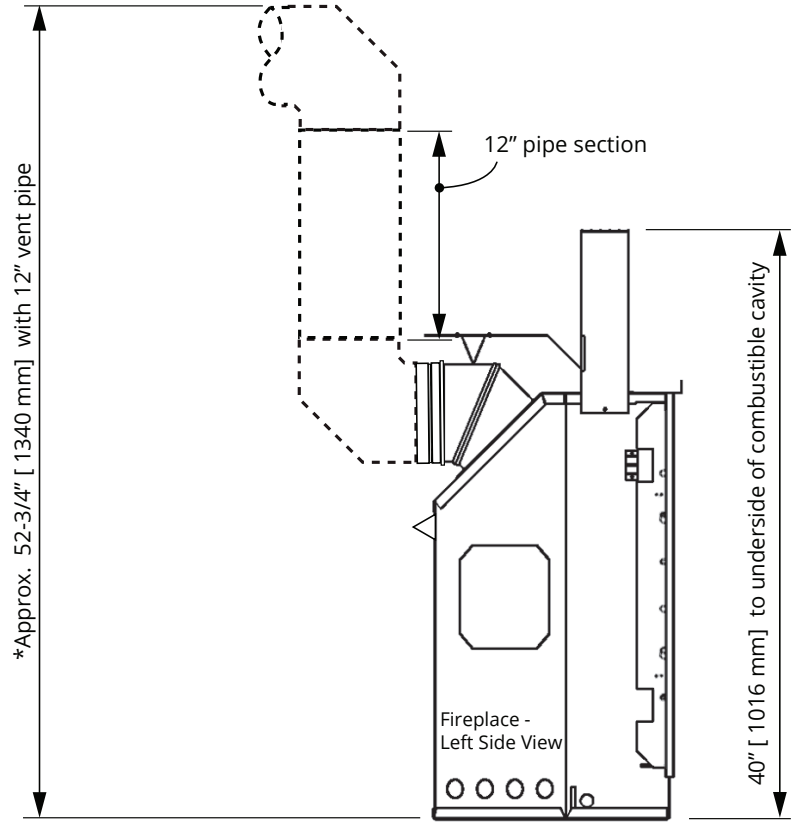

Venting Considerations

*Notes—ALL venting considerations

- Dimensions of venting are based on using Dura-Vent elbows. Elbow curve radius dimensions will vary when using other brands. In general, other brands have slightly bigger radius.
- 3 inches clearance to combustibles required above horizontal pipe. Slope horizontal pipe upwards 1/4 inch per foot. 1 inch clearance required around sides and bottom of horizontal pipe and around vertical pipe.
- When calculating effective pipe lengths subtract approximately 1-1/2 inch for pipe joint - for example, a 12 inches pipe section will add approximately 10-1/2 inches overall.

Appliance Height in Framing

Hearth considerations

- Only a non-combustible hearth can be installed in front of the appliance if within 4” of the bottom of the appliance.
- The top surface of the non-combustible hearth must be at the same level as appliance bottom panel when using certain trims and accessoires—see pages 16-18.
- The non-combustible hearth in front of the appliance, if within 4” of the bottom of the appliance, must include the 1/2” vermiculite insulation board provided to be used as thermal break between non-combustible and combustible material underneath.

Appliance Depth in Framing

- 1130FFK Fixed Framing Kit and 1130CIK Clean Install Kit install at framing stage and the appliance position is fixed in the framing. In both cases, the wall finishes butt up to the frame of the kit.
- All other trims install after the wall finish is applied. The perimeter of the trims overlap the wall finish; therefore the thickness of any wall finish materials must be taken into consideration. The trims have enough adjustability to allow up to 3/4” thick material applied over top of the 1/2” thick non-combustible board. Otherwise the appliance position within the framing must be adjusted to allow the additional thickness—see page 27.

Using 1130FFK—Fixed Framing Kit

Part of the 1130 Fixed Framing Kit installs at the time of framing the appliance.

The side brackets provided loose with the appliance are not needed with this kit. See next page.

The positioning brackets and convection gap filler brackets installed on the appliance are not needed with this kit and must be removed. See next page.

The 1130 Fixed Framing Kit is not compatible with any other trim or door kits.

Hearth considerations

You need to know whether there will be a hearth or not in front of the appliance and some rules must be considered.

Without hearth (up the wall)

In the case where there is no hearth, the bottom of the appliance must be raised at least 4" inches above any combustible floor in front.

With hearth

Only a non-combustible hearth can be installed in front of the appliance if within 4" vertically of the bottom of the appliance. See Framing on pages 15-18 of this manual for hearth requirements details.

The non-combustible hearth in front of the appliance, if within 4" of the bottom of the appliance, must include the 1/2" vermiculite insulation board provided to be used as thermal break between non-combustible and combustible material underneath.

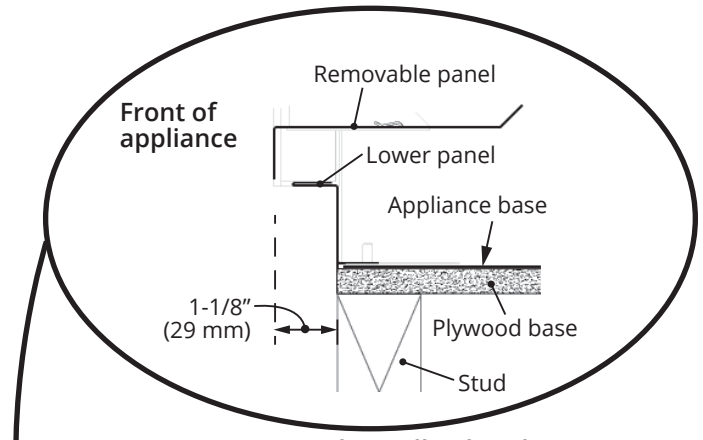

Section view, up the wall—detail

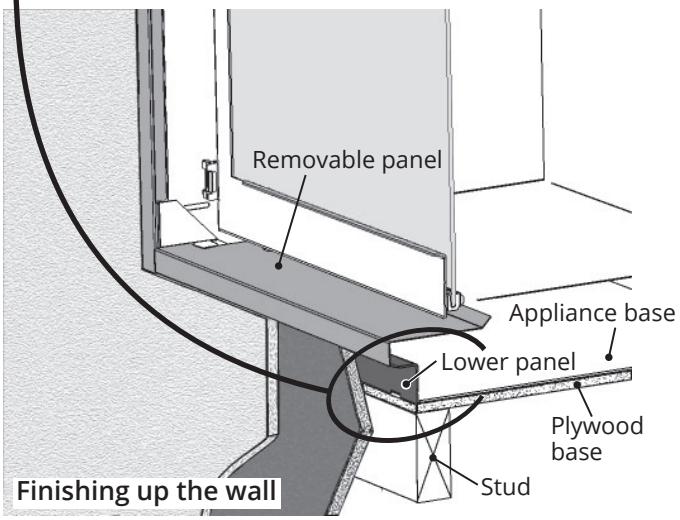

Finishing up the wall

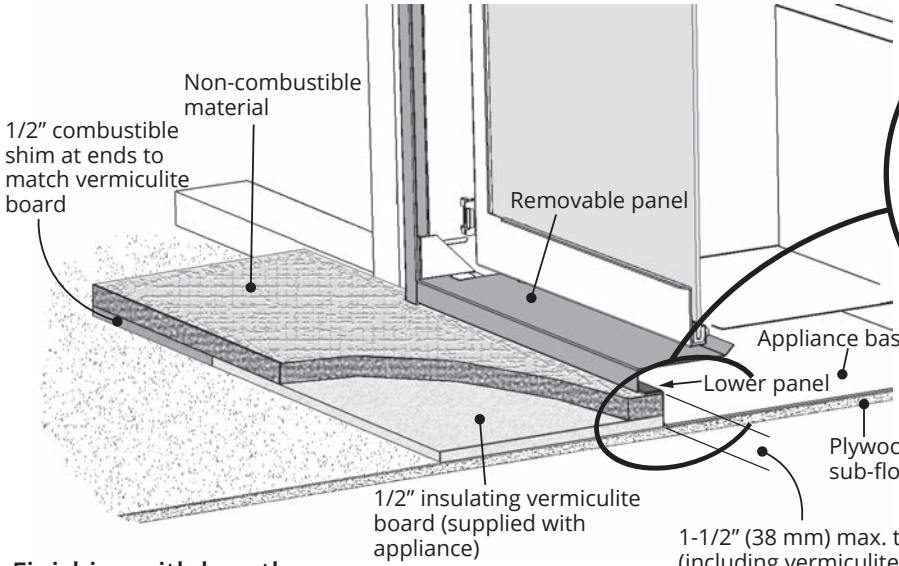

Finishing with hearth

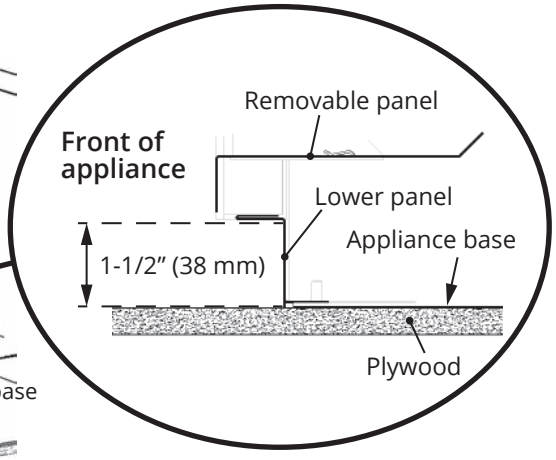

Section view, hearth—detail

Framing—1130FFK Fixed Framing Kit

Appliance Depth in Framing—with 1130 Fixed Framing Kit

The 1130 installs to the appliance during the framing stage and the appliance's position is fixed in the framing. Wall finishes are then applied over top of the flanges and butted up to the frame of the 1130.

1130FFK Fixed Framing Kit

NOTE

Non-combustible wall finish material is required above the unit, see page 28.

1130 Fixed Framing Kit, fixed position

- **side brackets** supplied with appliance **not required**
- appliance **positioning brackets** supplied on appliance **not required**
- appliance **convection gap filler brackets** supplied on appliance **not required**
- **see installation instructions on page 51**

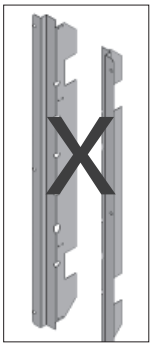

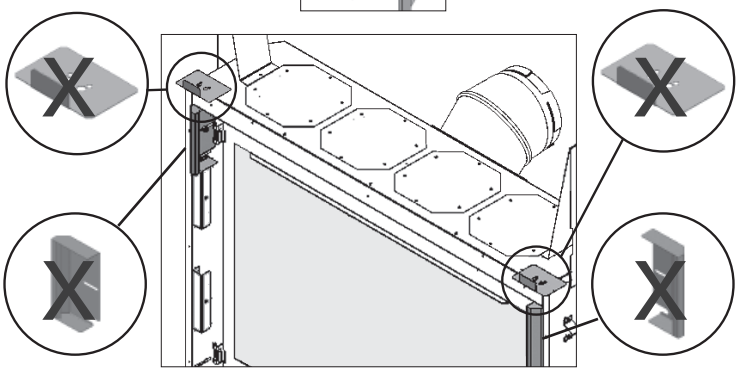

Using 1130CIK—Clean Install Kit

Part of the 1130CIK Clean Install Kit installs at the time of framing the appliance.

The side brackets provided loose with the appliance are not needed with this kit. See next page.

The positioning brackets, convection gap filler brackets and trim support brackets installed on the appliance are not needed with this kit and must be removed. See next page.

The 1130CIK Clean Install Kit is not compatible with any other trim or door kits.

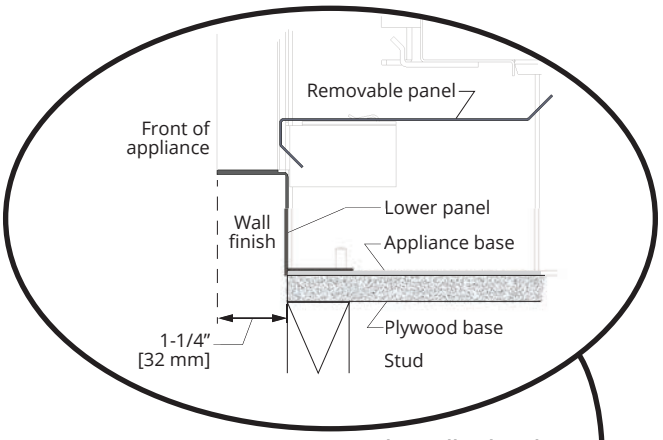

Section view, up the wall—detail

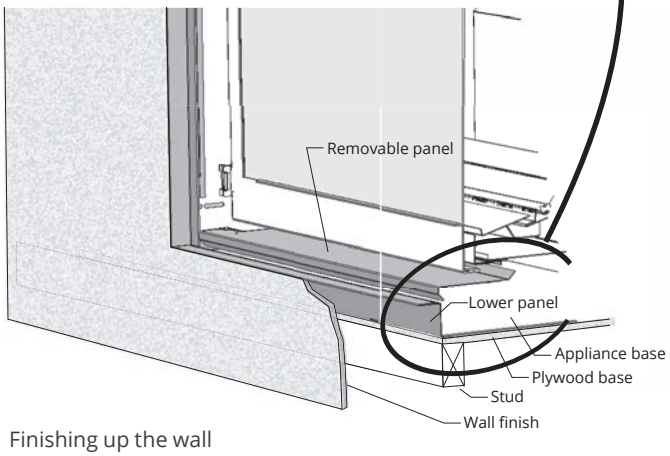

Finishing up the wall

Hearth considerations

You need to know whether there will be a hearth or not in front of the appliance and some rules must be considered.

Without hearth (up the wall)

In the case where there is no hearth, the bottom of the appliance must be raised at least 4" inches above any exposed combustible floor in front.

With hearth

Only a non-combustible hearth can be installed in front of the appliance if within 4" vertically of the bottom of the appliance. See Framing on pages 15-18 of this manual for hearth requirements details.

The non-combustible hearth in front of the appliance, if within 4" of the bottom of the appliance, must include the 1/2" vermiculite insulation board provided to be used as thermal break between non-combustible and combustible material underneath.

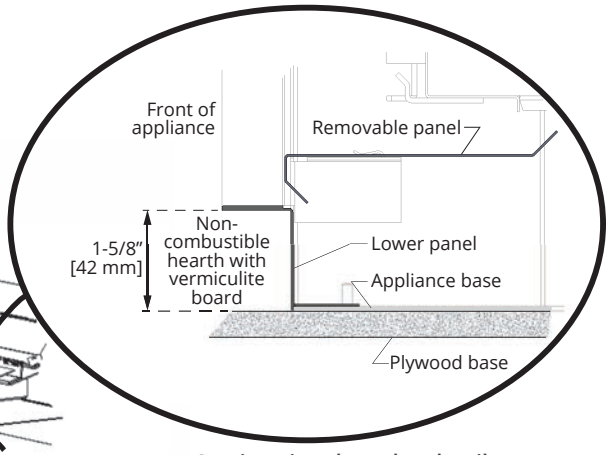

Section view, hearth—detail

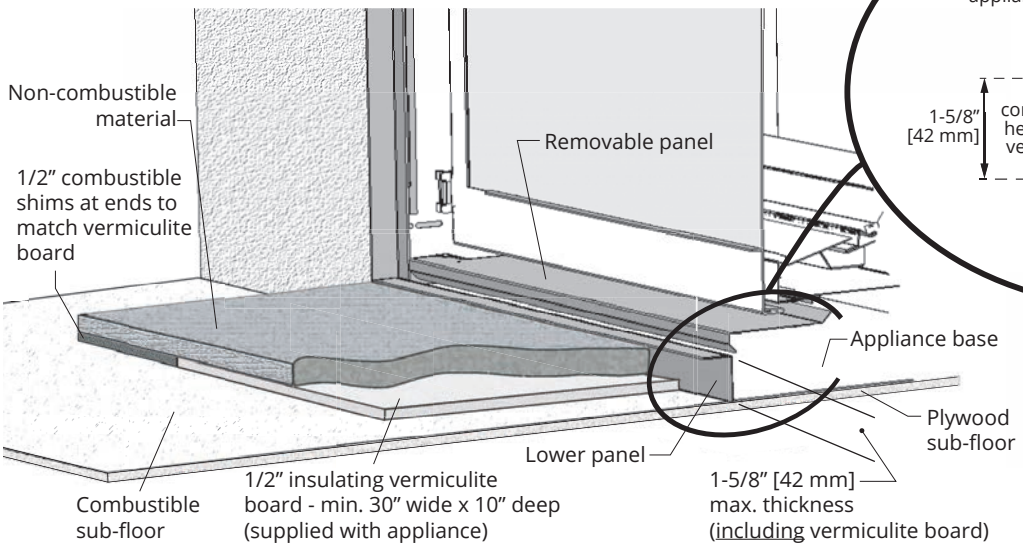

Finishing with hearth

Framing—1130CIK Clean Install Kit

Appliance Depth in Framing—with 1130CIK Clean Install Kit

The 1130CIK installs to the appliance during the framing stage and the appliance's position is fixed in the framing. Wall finishes are then applied over top of the flanges and butted up to the frame of the 1130CIK.

NOTE

Non-combustible wall finish material is required above the unit, see page 28.

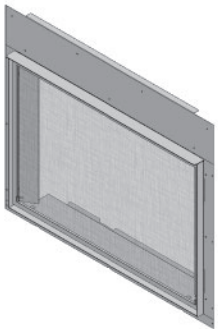

1130CIK Clean Install Kit

1130CIK Clean Install Kit, fixed position

- **side stud brackets** supplied with appliance **not required**
- appliance **positioning brackets** supplied on appliance **not required**
- appliance **convection gap filler brackets** supplied on appliance **not required**
- **appliance inboard side trim fixing brackets not required**

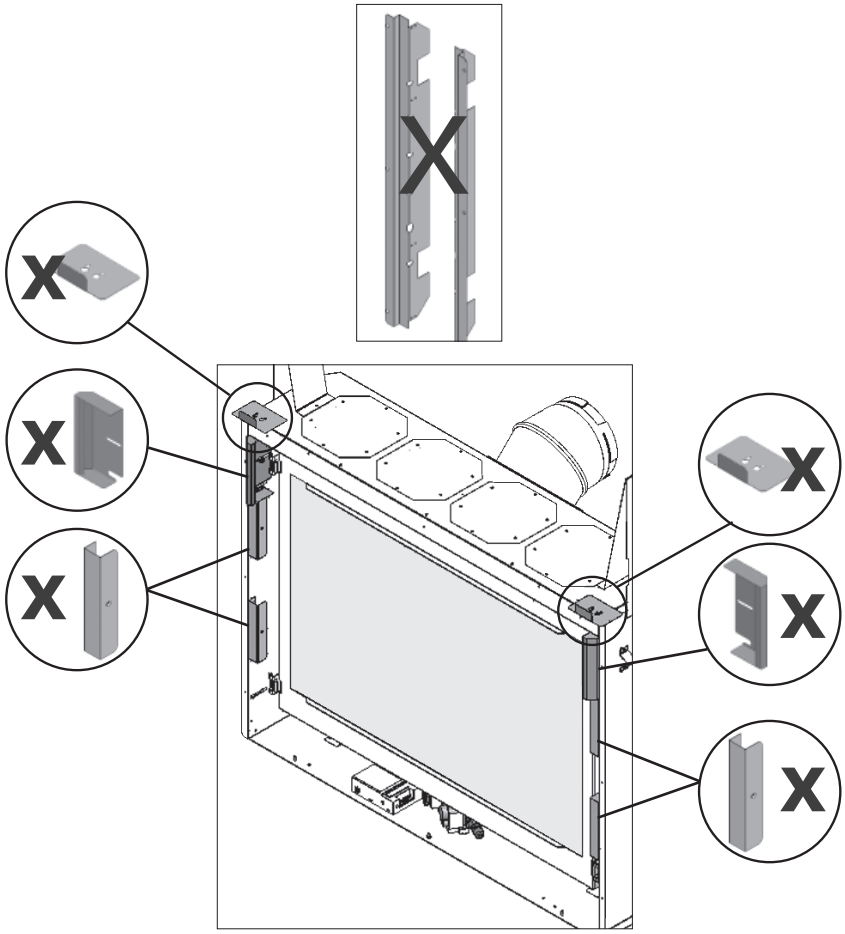

Using 3 or 4-Sided Trims

The 3-sided trims (1135, 1184) and 4-sided trim (1140v2) are fitted to the appliance once its installation and the wall finish application have been completed.

The side brackets provided loose with the appliance are required for those trims and fronts.

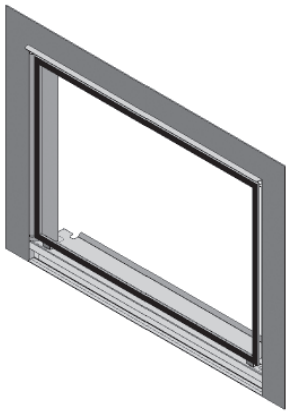

1135 3-sided trims

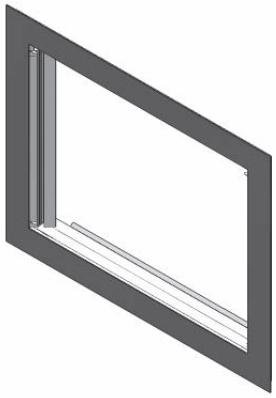

1140 4-sided trim

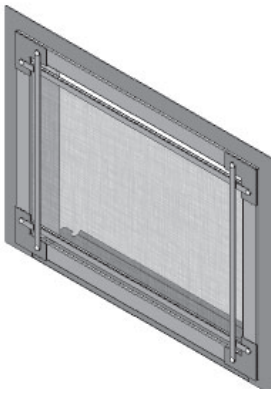

1184EC Edgemont Craftsman trims

Hearth considerations

You need to know whether there will be a hearth or not in front of the appliance and some rules must be considered:

Without hearth

In the case where there is no hearth, the bottom of the appliance must be raised at least 4" inches above any exposed combustible floor in front.

With hearth

- The bottom of the appliance must be installed level with the top of the hearth surface in most cases other than with **the 4-sided trim 1140 which hangs 1-1/2" below the bottom of the appliance**.
- Only a non-combustible hearth can be installed in front of the appliance if within 4" vertically of the bottom of the appliance.
- The non-combustible hearth in front of the appliance, if within 4" of the bottom of the appliance, must include the 1/2" vermiculite insulation board provided to be used as thermal break between non-combustible and combustible material underneath.
- See Framing on pages 15-18 of this manual for hearth requirements details

Appliance Depth in Framing—with 3 and 4-Sided Trims

- The 3 and 4-sided trims are adjustable to accomodate up to an additional 3/4” of tile or other finish overtop of the 1/2” non-combustible wall board.
- The appliance’s position within the framing cavity may also be adjusted for depth in the framing to accomodate additional wall finish thickness “tucked” behind the trim.

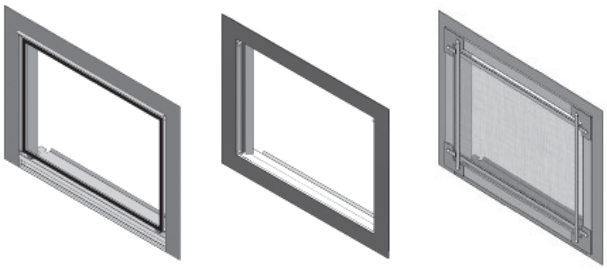

1135 3-sided trims | 1140 4-sided trims | 1184EC Edgemont Craftsman Trims

3 and 4-Sided Trims—adjustable position

Installation Method 1

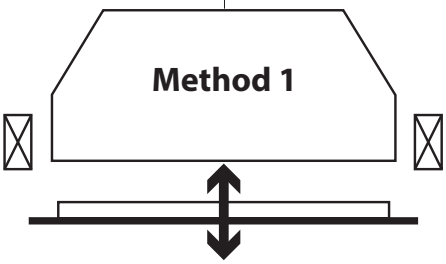

- wall finish thickness: **up to** 3/4” + 1/2” non-combustible board
- trim’s depth on appliance can be adjusted to accomodate wall finish thickness

- side brackets fixing position

Use hole

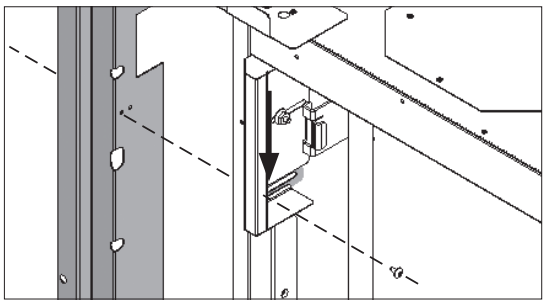

Installation Method 2

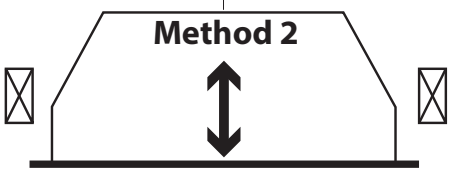

- wall finish thickness: **more than** 3/4” + 1/2” non-combustible board
- appliance’s depth can be adjusted in the framing to accomodate additional wall finish thickness of up to approximately 2”

- side brackets fixing position

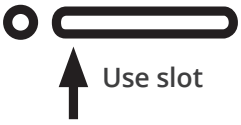

Use slot

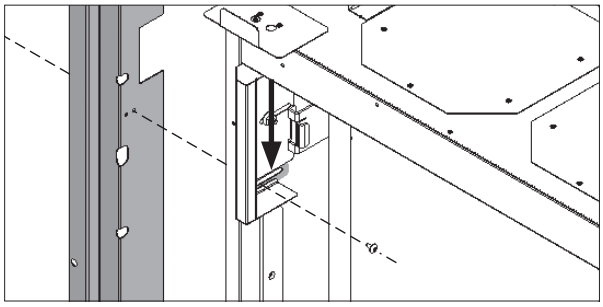

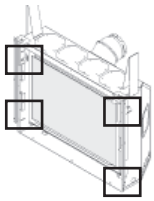

Planning

Plan the Wall Finish

Non-Combustible Materials Specifications

Non-combustible materials are those which will not ignite and burn. Such materials are those consisting entirely of steel, iron, brick, tile, concrete, slate, glass or plasters, or any combination thereof.

Materials that are reported as passing ASTM E 136, *Standard Test Method for Behavior of Materials in a Vertical Tube Furnace* at 750 °C shall be considered non-combustible materials.

Combustible Materials Specifications

Materials made of or surfaced with wood, compressed paper, plant fibers, plastics, or other material that can ignite and burn, whether flame proofed or not, or plastered or unplastered shall be considered combustible materials.

Non-Combustible Cement Board

The H5 fireplace requires a 1/2" (13 mm) thick non-combustible cement board or equivalent, to be used as a wall surface immediately above the unit—see diagram for minimum coverage.

Extending the cement board well beyond the minimum shown will help avoid cracking due to differential expansion of materials.

Pre-drill cement board with oversized holes and do not over-tighten screws to avoid cracking due to heat expansion.

Standard gypsum wall board may be used beyond the perimeter of the cement board although it is preferable not to change materials to help avoid cracking.

Finishing Around Trims

Additional non-combustible material such as tile, etc., may be applied over top of the wall surface or you may choose to leave it finished clean with no tile.

Be aware that a trim is always required and that the wall finish thickness must be taken into account for all installations other than the 1130FFK—Fixed Framing Kit and the 1130CIK—Clean Install Kit.

All the other trims, 1135, 1140v2 and 1184 will accept wall finish tucked under their edge up to approximately 2" thick.

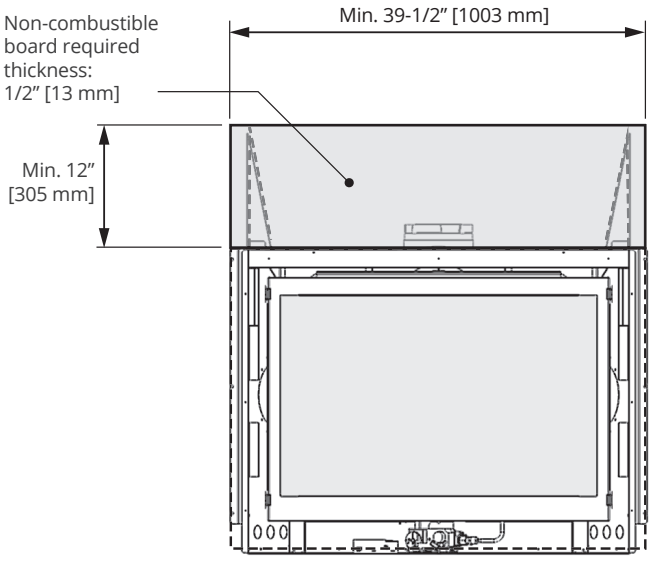

Minimum cement board dimensions

1130CIK
Clean Install Kit

1130FFK
Fixed Framing Kit

1130FFK Fixed Framing Kit 1130CIK Clean Install Kit

- Installs at framing stage
- Wall finish butts up to the frame
- Does not accept other optional surrounds

1135TSB
3-Sided Trims

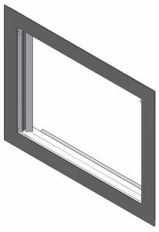

1140FSBv2
4-Sided Trims

1184EC Edgemont
Craftsman Trims

1135TSB 3-Sided Surround, 1184EC Edgemont Craftsman trims and **1140FS_2 4-Sided Surround**

- Installs **after** wall finish is applied
- Surround overlaps wall finish

Cracking Wall Finishes

We recommend installing the optional HeatShift System to reduce the wall temperatures and minimize the possibility of cracking wall finishes. See Appendix D - HeatShift System on pages 83-101.

If a clean finish with no tile, etc. is desired, joints in the non-combustible board and the transition to gypsum board will require special attention if future cracking is to be controlled.

Shrinkage and differential movement of the framing and non-combustible wall board can transmit cracking through to tiles, etc.

Be aware that temperatures on the non-combustible wall surface above the appliance can exceed 200°F.

Below are some tips on how to best avoid any cracking:

- Allow materials to dry thoroughly before finishing the wall. Cement board has the ability to absorb up to 30 percent of its weight in water and may shrink as much as 1/8" over a 48" length when drying from a saturated condition. Running the fireplace for an extended period before final finishing will help drive out moisture.
- Always pre-drill screw holes through cement board and use screws with self-milling head.
- Always use mesh tape over joints.
- Always stagger joints in wall board.
- Behind joints, double up studs or use studs "on the flat" to add extra support to the joint. Adhesive on the backside of wall board behind any joints can help control differential movement.
- Use multiple, thinner coats of joint compound and allow to dry thoroughly between coats.
- Ensure framing materials are dry.
- After finishing the wall, introduce heat gradually to slowly dry any excess moisture rather than drying too fast.
- Avoid notching cement board or tiles around corners of window opening and instead provide a joint that intersects the corner.
- Avoid using large, one-piece slab of material with a cut-out in the middle as a surround for the fireplace. Expansion above the opening will cause cracking at inside corners. Provide a joint that intersects the inside corner to avoid cracking.

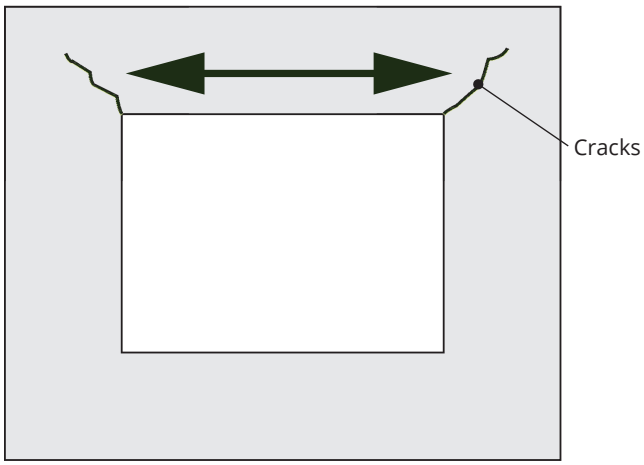

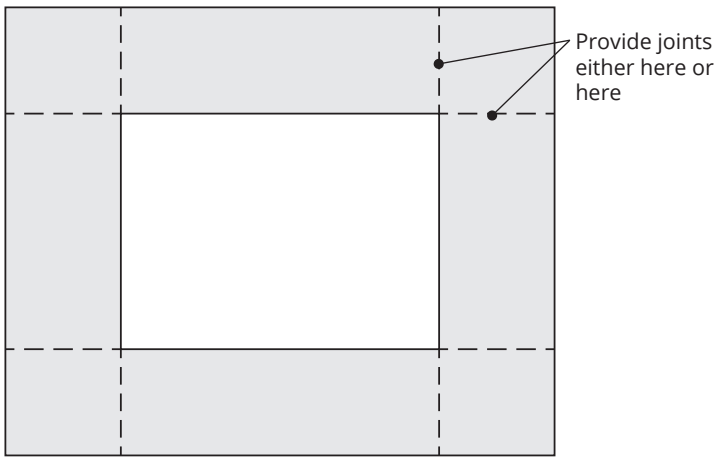

Top or Rear Facing Outlet

This unit is supplied with a 45 degrees top facing vent take-off which can be field-converted to a rear facing one. See Vent Take-Off on page 43 for more information.

Vent Material

This unit is approved for installation using 4 x 6-5/8-inch co-axial direct vent pipe and accessories as listed in Approved Venting Components on pages 8-9. Follow the installation instructions supplied with the individual venting accessories.

This unit may also be converted to co-linear (3 x 4 in) venting for use in solid-fuel burning fireplaces and chimneys using adapters and accessories—see Approved Venting Components on pages 8-9 and Co-linear Conversion on pages 37-41.

Vent Sealing

Seal all **outer** coaxial pipe and elbow joints, including sectioned elbow **outer** joints, using high quality, high temperature 2 inch wide self-adhesive aluminum foil tape (Nashua-322-2 brand or similar). Wrap the tape completely around all **outer** joints and press firmly to seal.

A high temperature black silicone sealant may be used in the **outer** joints as a substitute to foil tape.

Ensure all the pipe joints have a minimum of 1 ¼ inch overlap.

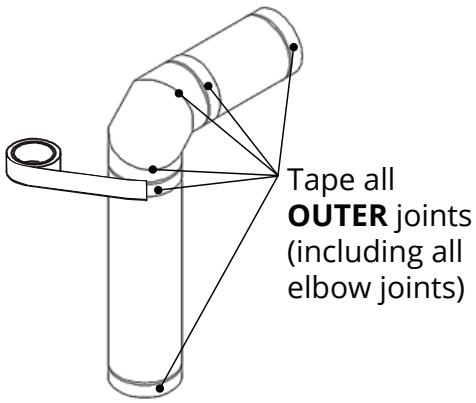

Wall Thickness

The appliance vent is suitable for penetrating a combustible wall assembly up to 8 inches in thickness. A non-combustible wall can be of any thickness up to the maximum horizontal run of vent pipe allowed for the particular installation.

Framing Vent in Combustible Walls & Ceilings

When penetrating through combustible walls and ceilings, frame a minimum of 10 in x 10 in opening and ensure that the insulation is kept clear of the vent pipe using either a wall thimble or an attic insulation shield. Follow the installation instructions supplied with the individual venting components.

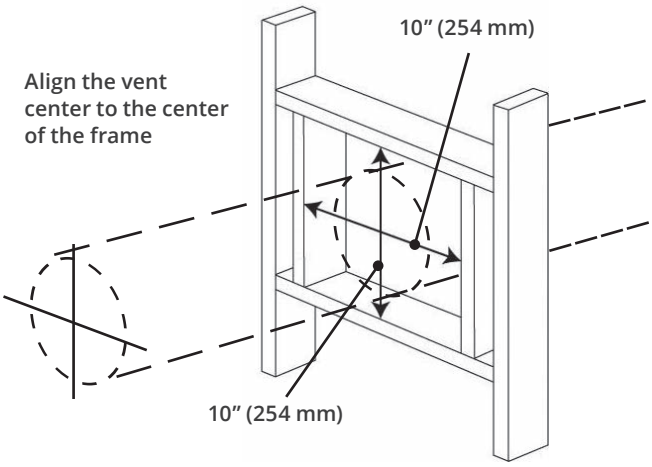

Important Installer Notice – Weather Sealing & Vapor Barriers

It is the installer's responsibility to ensure that vent installations through exterior walls are caulked and weatherproofed in such a manner as to:

- Prevent rain water from entering the wall from the weather side by adequately caulking the outer vent plate to the exterior wall surface.
- Prevent moisture inside the home from penetrating into the wall structure by ensuring the inside wall plate is adequately sealed to the inside vapor barrier.
- Prevent rain water and moisture from entering the walls by sealing the joints between the outer vent tube and the inner and outer wall plates.

We recommend the use of a high quality polyurethane sealant.

All horizontal pipe runs must be graded 1/4 inch per foot upwards in the direction of the exhaust flow. The final pipe length, when terminating through the wall may be graded downwards slightly to prevent water migration.

Typical Co-axial Venting Components

IMPORTANT

Provide support for vertical pipe runs, particularly offsets. Do not rely on the appliance for support of long vertical pipe runs. Horizontal pipe runs should be supported every 4 feet using strapping.

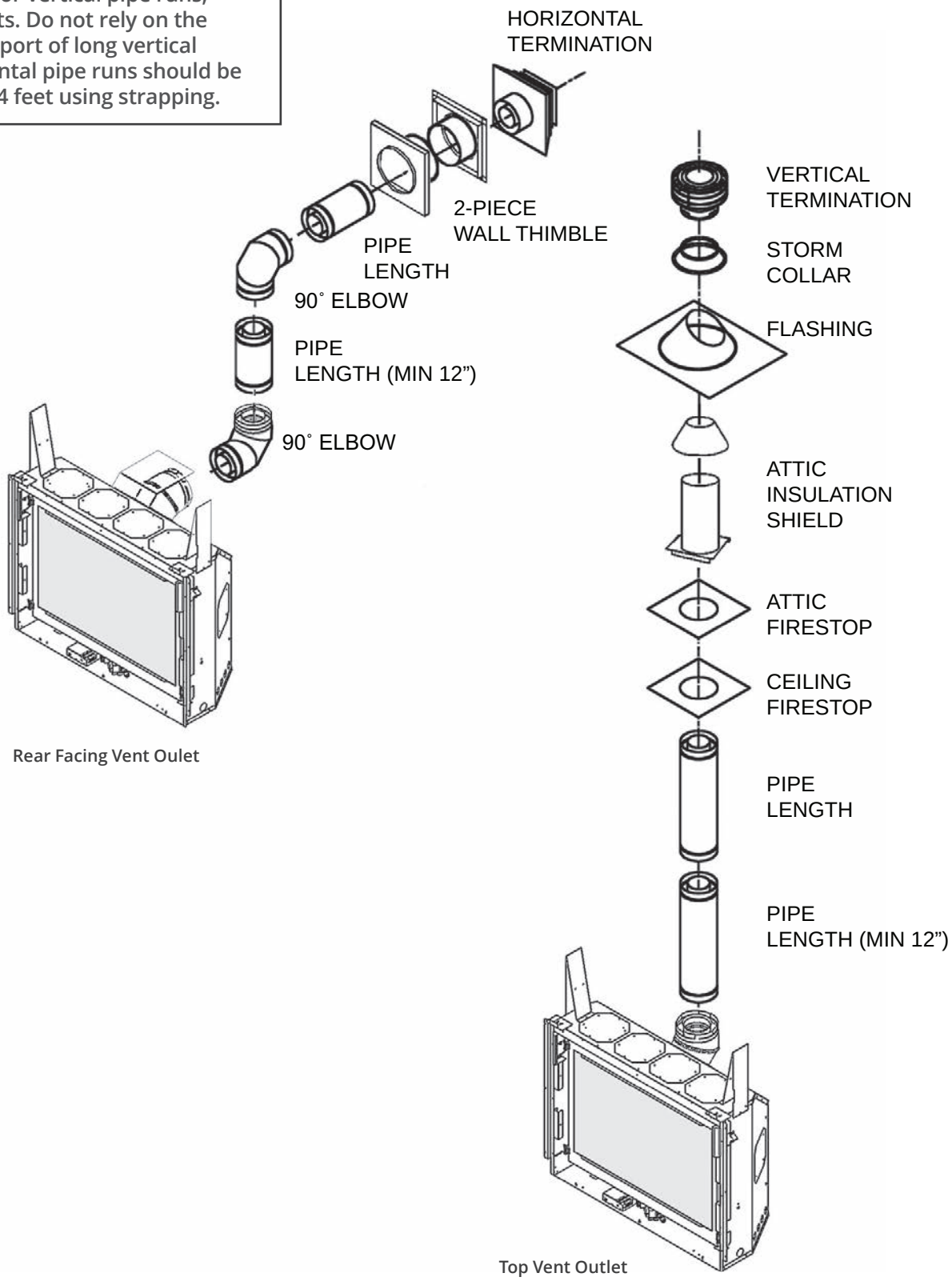

How to Read the Venting Chart

The chart below applies to co-axial roof or wall termination.

1. Minimum 12" vertical rise required in venting system directly of unit or after first elbow as shown on following page.
2. The total length of the vent pipe cannot exceed 40 feet.
3. The minimum vertical height with roof termination is 6 feet.
4. Any combination of rise and run can be used as long as they are within the allowable limits shown on the chart at right.
5. A maximum of 4 x 90 degrees elbows—or equivalent (2 x 45 degrees = 90 degrees)—can be used.
6. Each 90 degrees elbow installed on the horizontal plane is equivalent to a 3 feet horizontal pipe; therefore, 3 feet must be subtracted from allowable horizontal run. (45 degrees elbow is equivalent to 18 inches horizontal pipe.)
7. All horizontal pipe runs must be graded 1/4 inch per foot upwards in the direction of the exhaust flow. The final pipe length, when terminating through the wall may be graded downwards slightly to prevent water migration.
8. A restrictor adjustment is required for all installations—see next section.
   Note: The restrictors are shipped loose with the appliance.

Venting Chart

Allowable Co-Axial Vent Configurations with restrictor positions

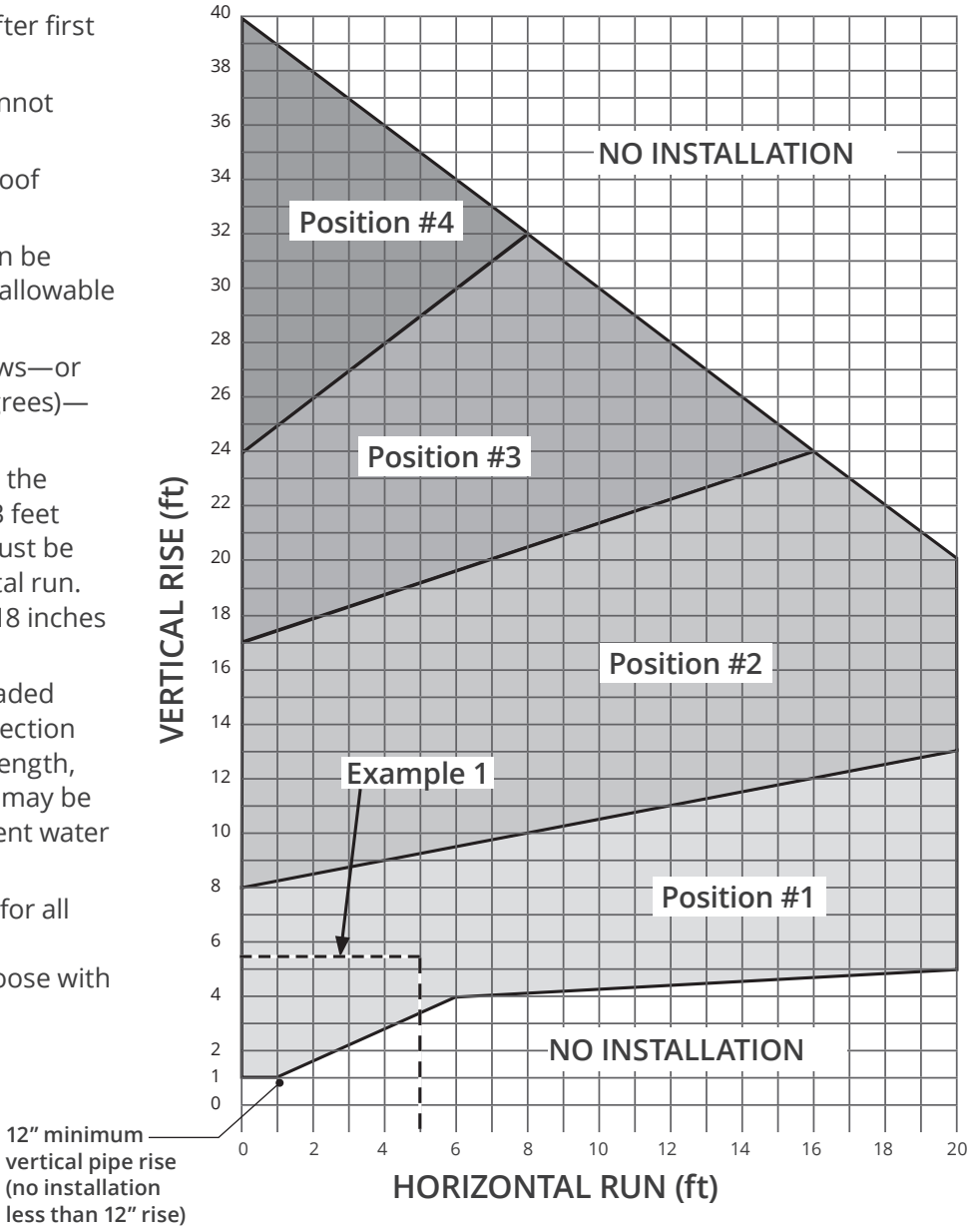

Example 1
V Value = V1 (3') + V2 (1.5') + V3 (1')= 5.5'
H Value = H1 (3') + H2 (2') = 5'
Restrictor position #1 required

4 x 90° ELBOWS MAXIMUM
(or equivalent)

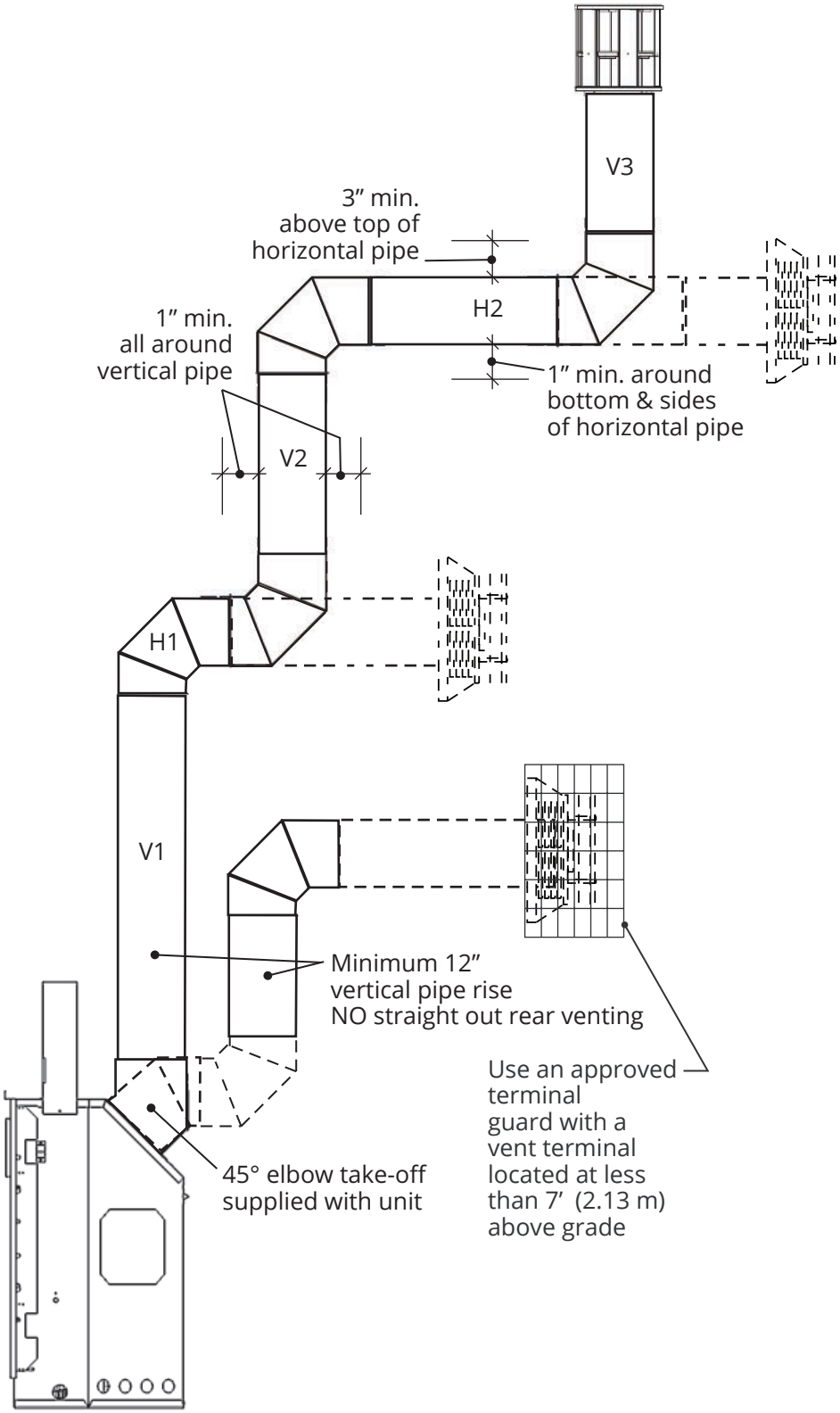

Restrictors

Install the restrictors in the roof of the firebox behind the top liner panel. Adjust the restrictors before installation of the top liner panel. Should subsequent adjustment be required, you will need to remove the top liner panel—see page 56.

ALL INSTALLATIONS REQUIRE RESTRICTORS for improved flame picture and performance. This unit is supplied with restrictors having four different positions or settings. The level of restriction required depends on the vertical rise in the venting system and, to a lesser degree, the horizontal run and number of elbows.

The amount of restriction is based on laboratory tests. The ideal restrictor position may vary slightly, especially when the vent pipe length is near the limits of the acceptable configurations for each type of restrictor.

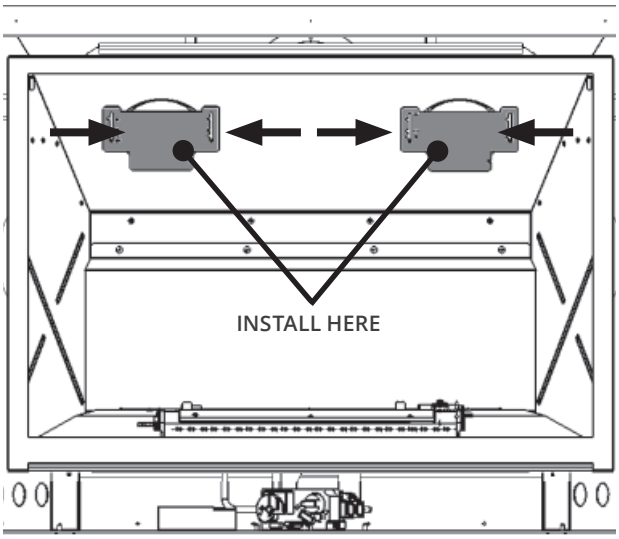

The chart on the previous page shows the vent restrictor positions required relative to the length of the vent pipe.

To set the restrictors position:

1. Establish the required position of the restrictors looking up the venting table on the previous page.
2. Fasten the restrictors using the screws (2) already installed on each side of **the firebox roof ports.**
3. Slide the restrictors in the required position.
4. Tighten the screws.

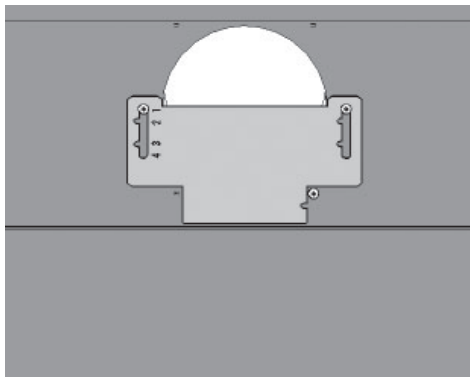

Position #1

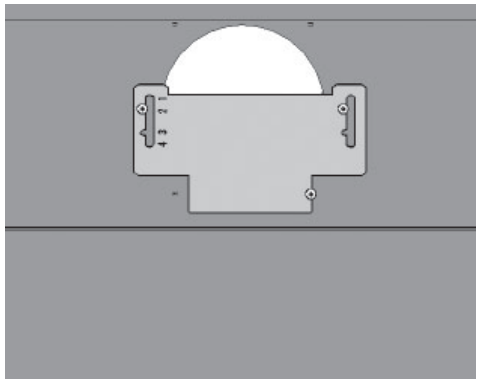

Position #2

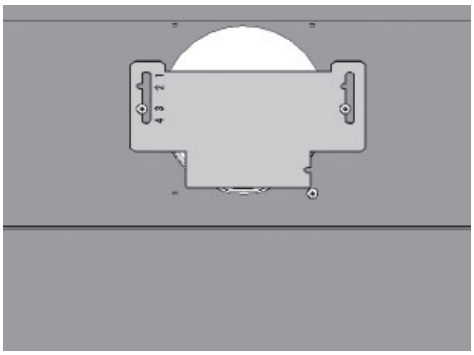

Position #3

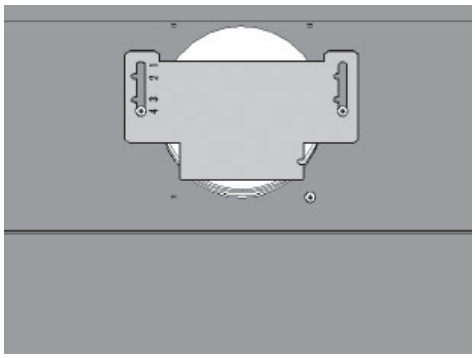

Position #4

Horizontal Vent Termination Location

- The vent terminal must be located on an outside wall or through the roof.
- This direct vent appliance is designed to operate when an undisturbed airflow hits the outside vent terminal from any direction.
- The minimum clearances from this terminal that must be maintained when located on an outside wall are shown in figure below. Any reduction in these clearances could result in a disruption of the airflow or a safety hazard. Local codes or regulations may require greater clearances.
- The vent terminal must not be recessed into a wall or siding.
- The vent terminal should be positioned where any snowdrifts will not cover it.
- Sidewall vent terminations require a terminal guard such as 658TG or 845TG when accessible—within 7' of ground.

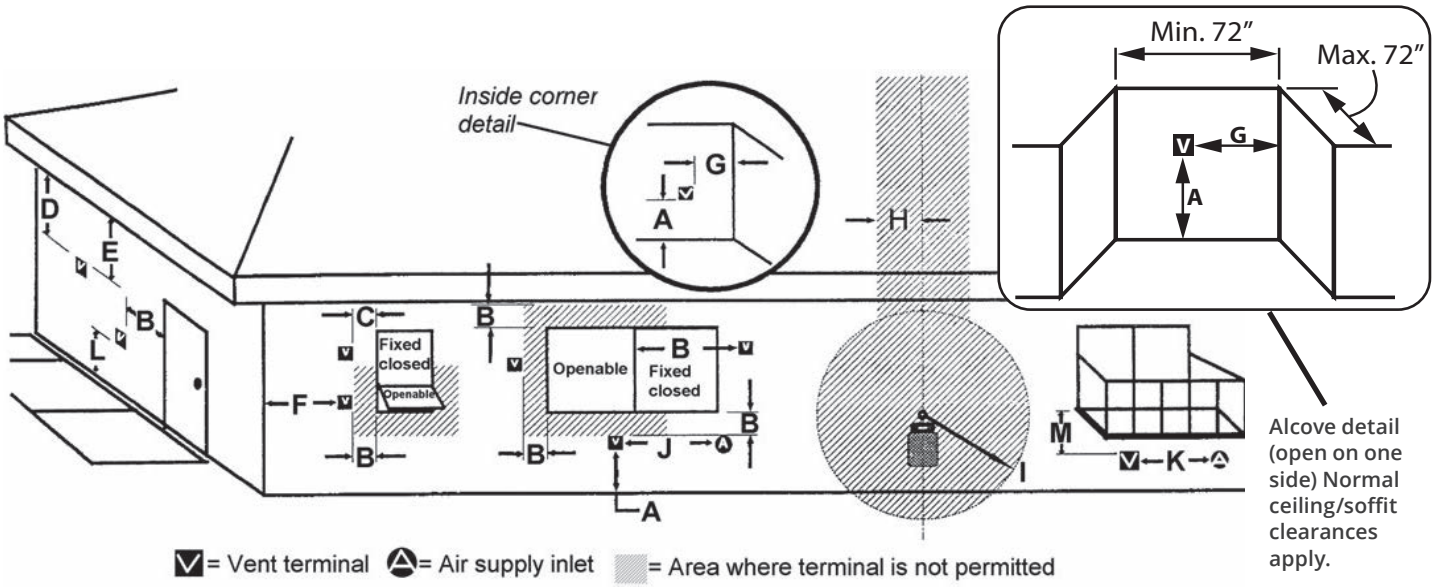

KEY	VENT TERMINAL LOCATIONS - MINIMUM DISTANCES	MINIMUM CLEARANCE	
		Inches	Cm
A	Clearance above grade, verandah, porch, deck or balcony	12	30
B	Clearance to window or door that may be opened	12	30
C	Clearance to permanently closed window (recommended to prevent condensation on window)	12	30
D	Vertical clearance to ventilated soffit located above the terminal within a horizontal distance of 2 feet (60 cm) from the center-line of the terminal	18	46
E	Clearance to unventilated soffit	12	30
F	Clearance to outside corner (measured from the center of vent)	12	30
G	Clearance to inside corner (measured from the center of vent)	12	30
H	Horizontal clearance to center-line of meter/regulator assembly located within 15 feet (4.6 m) below the terminal	36	90
I	Clearance to service regulator vent outlet	36	90
J	Clearance to non-mechanical air supply inlet to the building or the combustion air inlet to any other appliance	12	30
K	Clearance to a mechanical air supply inlet	72	180
L	Clearance above paved sidewalk or a paved driveway located on public property ***Note:*** *A vent must not terminate directly above a sidewalk or paved driveway, which is located between two single-family dwellings and serves both dwellings.* ***THIS DOES NOT APPLY to direct vent, non-consdensing appliances in the Province of Ontario.***	84	210
M	Clearance under a verandah, porch, deck or balcony *Only permitted if veranda, porch, deck or balcony is fully open on a minimum of 2 sides beneath the floor*	12	30

Note: Local codes and regulations may require different clearances.

Vertical Vent Termination

Roof Pitch	Minimum "H" (feet)
Flat to 7/12	1'
Over 7/12 to 8/12	1.5'
Over 8/12 to 9/12	2'
Over 9/12 to 10/12	2.5'
Over 10/12 to 11/12	3.25'
Over 11/12 to 12/12	4'
Over 12/12 to 14/12	5'

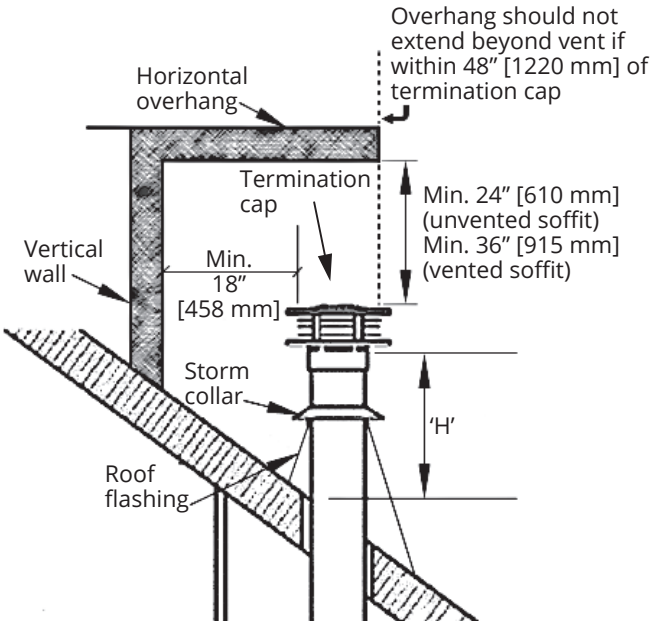

Applications

This appliance can be converted to install as a co-linear application. The co-linear portion of the vent system may only be installed within a solid-fuel burning fireplace and chimney.

This appliance must not be connected to a chimney flue serving a separate solid-fuel burning appliance.

Types of Installations

- Installation into an existing fireplace
- Partial installation into an existing fireplace
- Installation into an adjacent chimney

See the following pages for each installation details.

Rules for Co-Linear Venting

- Maximum 40 feet vertical pipe
- Minimum 10 feet vertical
- Maximum offset 8 feet with liners at minimum 45 degrees from horizontal plane
- Restrictor: Use #4 position for all co-linear venting applications.

NOTE

Co-linear flexible aluminum venting liners should be professionally inspected periodically for corrosion and damage and replaced when necessary. If the installation does not allow for future inspection or replacement of the flexible aluminum liners, then stainless steel vent liners are recommended.

Existing Fireplace Preparation

A few points must be considered before inserting the H5 into an existing fireplace cavity. Generally, no modifications are allowed to the existing fireplace that will compromise the integrity of the existing fireplace.

Cutting away any sheet metal parts of the existing fireplace to accommodate the installation of the H5 is prohibited. Check with local authorities if in doubt.

Components that are bolted or screwed on such as dampers or baffles may be removed to accommodate the installation of the H5 engine. Refractory bricks, glass doors, screen rails, screen mesh, and log grates can be also removed.

Clean Fireplace and Chimney

Have the chimney swept and the fireplace cavity including ash dumps and clean-outs cleaned before installing the H5 heater and vent liners. Any creosote or soot residue remaining in the fireplace cavity chimney or clean-out may cause odors or stains once the H5 insert is installed. Consult with chimney sweep for information on how best to clean.

Existing Dampers

Factory-built, zero-clearance fireplaces will require the damper to be removed in order to install the vent liners. These dampers are usually bolted into place. Dampers in masonry fireplaces must be fixed open and may remain in place.

Ash Retaining Curbs

Some fireplaces (particularly factory-built) have a raised curb at the front edge to retain ashes. Check the dimensions carefully to ensure the H5 engine will fit behind any raised curb (some curbs may be removed separately from the refractory base).

Gas Line Routing

Plan the routing of the gas line before proceeding. Utilize the existing hole for the gas line of the factory-built fireplace.

If the fireplace has no access hole, carefully drill an access hole of 1.5 inch (37.5 mm) or less through the lower sides or bottom of the firebox in a proper workmanship manner. This access hole must be plugged with non-combustible insulation after the gas supply line has been installed.

See *Dimensions* section for detailed location of gas inlet. Also, take into consideration whether or not a fan or shut-off valve will interfere when planning routing of the gas line.

Combustible Mantels

Combustible mantel clearances must conform to those required for the original solid-fuel fireplace into which the H5 is being installed.

Attach Warning Conversion Plate to Existing Fireplace

(Label supplied with vent adapter)

Attach the “This fireplace has been converted...” label **to the existing fireplace** using screws or other mechanical means and store any removed parts in back of the existing fireplace for future use.

Installing Into an Existing Fireplace

Required accessories:

- Valor Co-axial to co-linear adapter 1156CLA;
- 2 lengths of 2-ply, flexible chimney liner approved for venting gas appliances:
  - 1 x 3-inch diameter for air inlet and
  - 1 x 4-inch diameter for exhaust;
- Co-linear termination kit 3 x 4 and flashing or co-linear to co-axial adapter and either high wind vertical vent terminal cap or a low profile vertical termination.

Note: A 3" diameter exhaust liner may be used if conditions will not allow for the 4" exhaust liner. Cold start-up problems may be experienced however when using a 3" exhaust liner.

Firebox zero clearance standoffs supplied with the heater are not required for this application.

1156CLA Co-Linear Vent Adapter

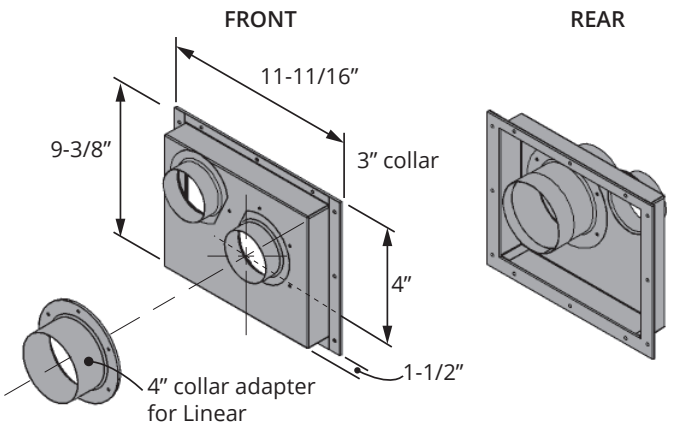

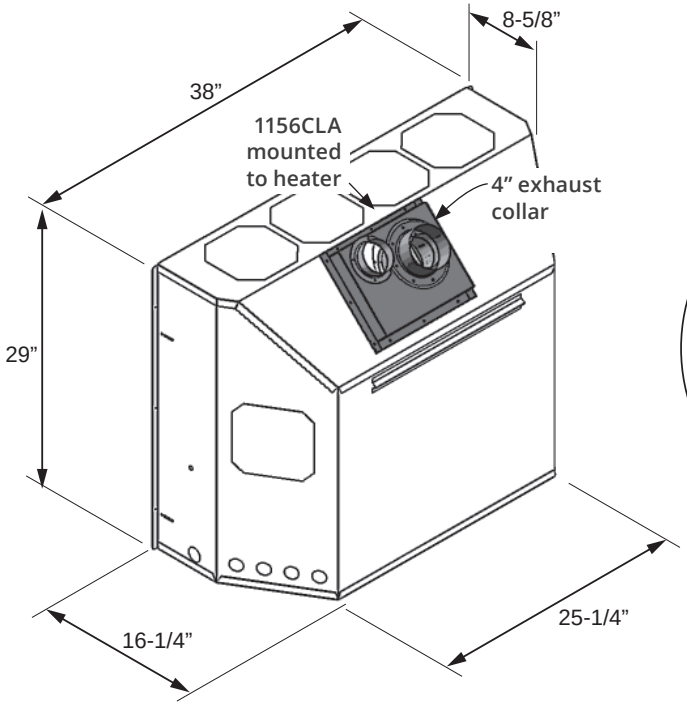

Dimensions with Co-linear Adapter 1156CLA

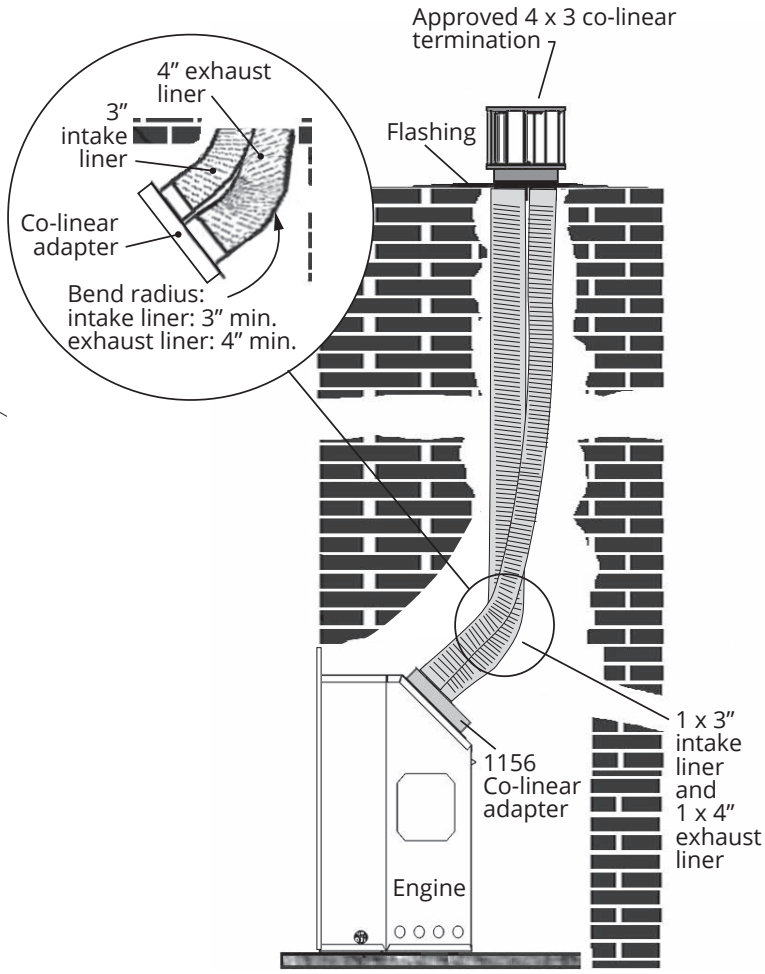

Co-linear installation into existing F/P

Partial Installation Into an Existing Fireplace

Required accessories:

- Co-axial to co-linear adapter at appliance Valor 1156CLA, 46DVA-GCL34 or equivalent;
- 2 lengths of 2-ply, flexible chimney liner approved for venting gas appliances:
  - 1 x 3-inch diameter for air inlet and
  - 1 x 4-inch diameter for exhaust;
- Co-linear termination kit 3 x 4 and flashing or co-linear to co-axial adapter and either high wind vertical vent terminal cap or a low profile vertical termination.

Note: A 3" diameter exhaust liner may be used if conditions will not allow for the 4" exhaust liner. Cold start-up problems may be experienced however when using a 3" exhaust liner.

NOTE

This appliance must be completely framed and maintain clearances to combustibles as shown in this manual.

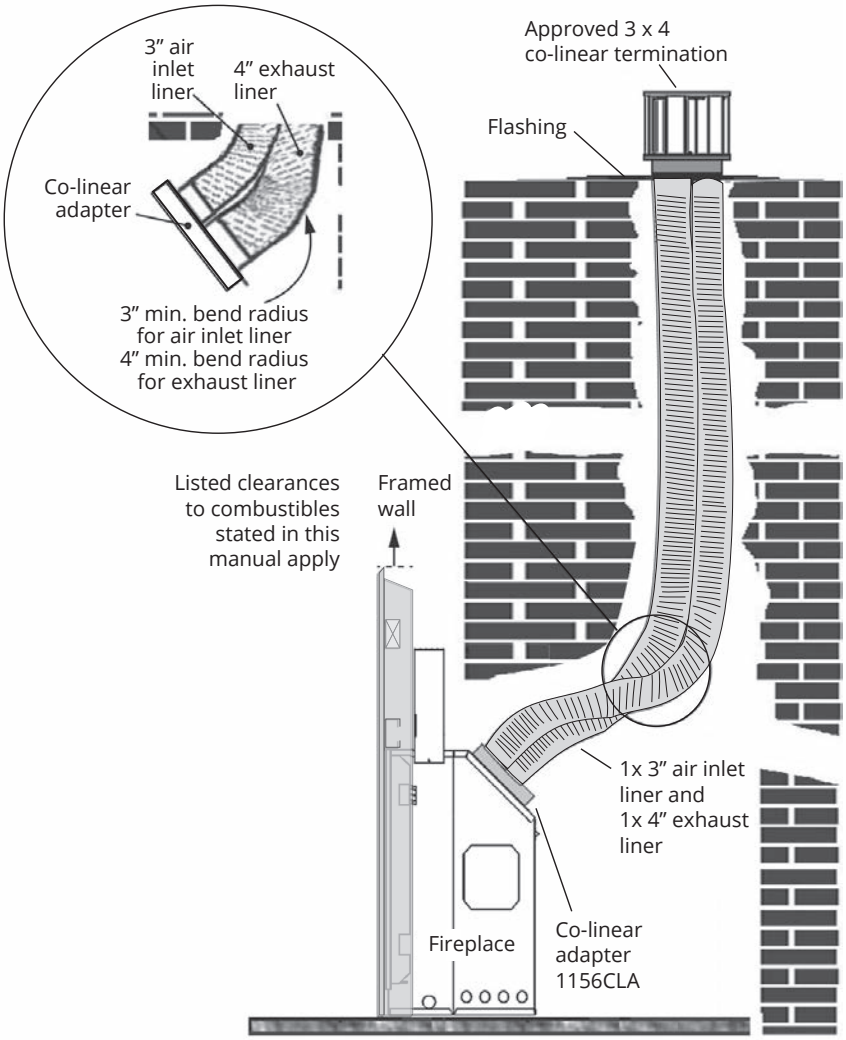

Co-linear installation on appliance partially into existing fireplace

Installation Into an Adjacent Chimney

Required accessories:

- Co-axial to co-linear adapter at appliance 46DVA-34CLAA, 46DVA-GCL34 or equivalent;
- 2 lengths of 2-ply, flexible chimney liner approved for venting gas appliances:
  - 1 x 3-inch diameter for air inlet and
  - 1 x 4-inch diameter for exhaust;
- Co-linear termination kit 3 x 4 and flashing or co-linear to co-axial adapter and either high wind vertical vent terminal cap or a low profile vertical termination.

Note: A 3" diameter exhaust liner may be used if conditions will not allow for the 4" exhaust liner. Cold start-up problems may be experienced however when using a 3" exhaust liner.

NOTE

This appliance must be completely framed and maintain clearances to combustibles as shown in this manual.

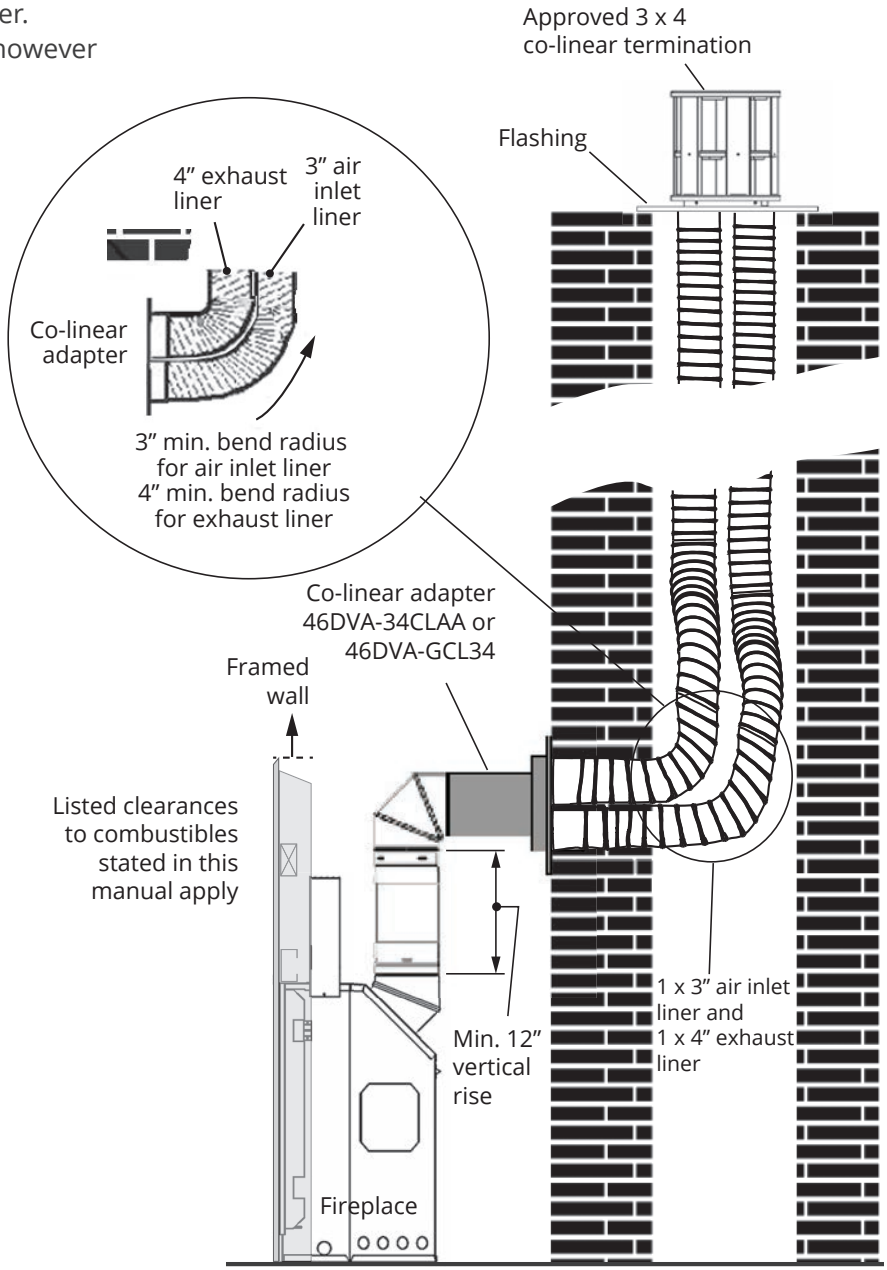

Co-linear installation into adjacent existing chimney

Typical Co-linear Venting Components

Co-axial to Co-linear Appliance Adapters

46DVA-GCL34

46DVA-34CLAA

Co-linear Terminal Configurations

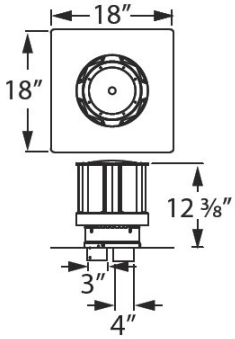

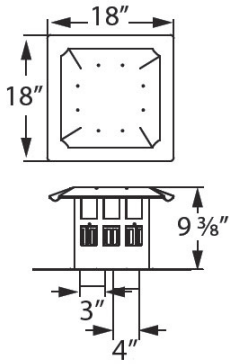

Co-linear Kits

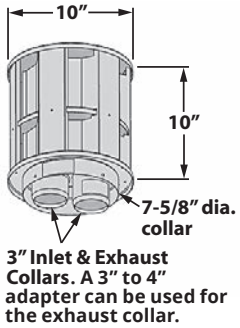

Co-Linear Terminal (typical)

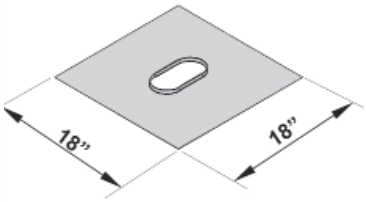

Flashing Kit

Alternate Co-linear to Co-axial Conversion at Terminal

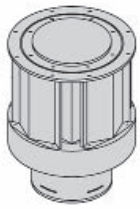

Co-axial Terminal Cap

With...

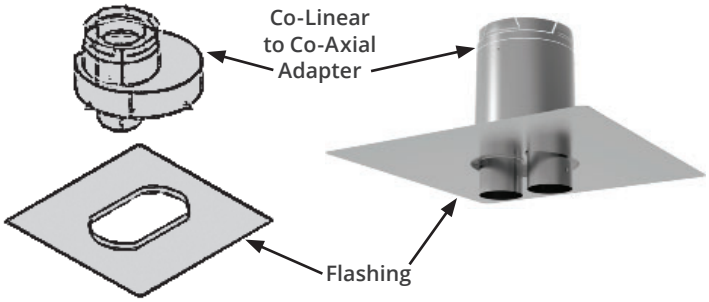

Preparation

Stand-offs & Heat Shields

Unpack Appliance

Caution

Beware of sharp edges! Wear gloves!

1. Remove cardboard wrapping and wood pallet from appliance and recycle.
2. Unpack any loose items packed around appliance.
3. **Verify that you have all the components required for the installation, including:**
   - approved non-combustible cement board (not supplied);
   - liners and fuel beds (packed separately);
   - trim kit with barrier screen;
   - venting components and accessories;
   - HeatShift System components, if used;
   - electrical components, if necessary.

Install Standoffs

The standoffs are supplied flat on the firebox sides and secured at one end.

Swivel up the flat standoffs, bend them as shown and screw their loose end to the top of the firebox.

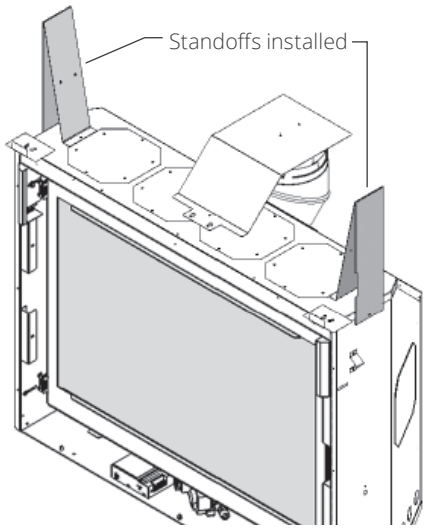

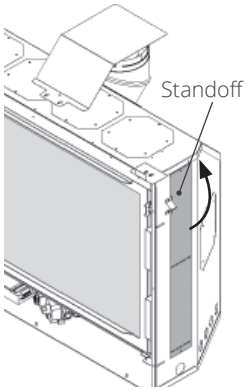

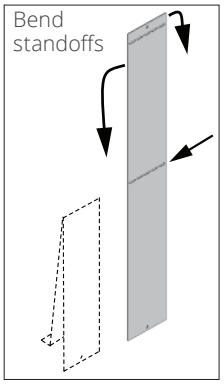

Remove Heat Shield

Remove the heat shield from the top of the appliance case (3 screws).

If using the top outlet or HeatShift, discard the shield. If using the rear outlet, keep the shield to reinstall after converting the top to rear outlet—see next page.

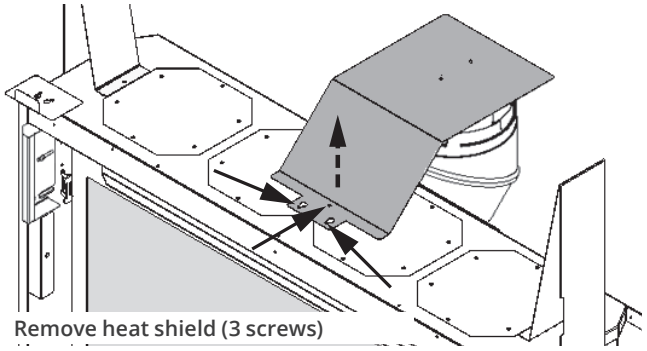

Stand-off Heat Shield (if required)

This heat shield is required when a built-in recess is framed into the wall above zero clearance stand-offs—see page 19. This shield is provided with the appliance.

Secure the shield to each top stand-off using 2 screws as shown. Note that this shield is not used with the HeatShift system.

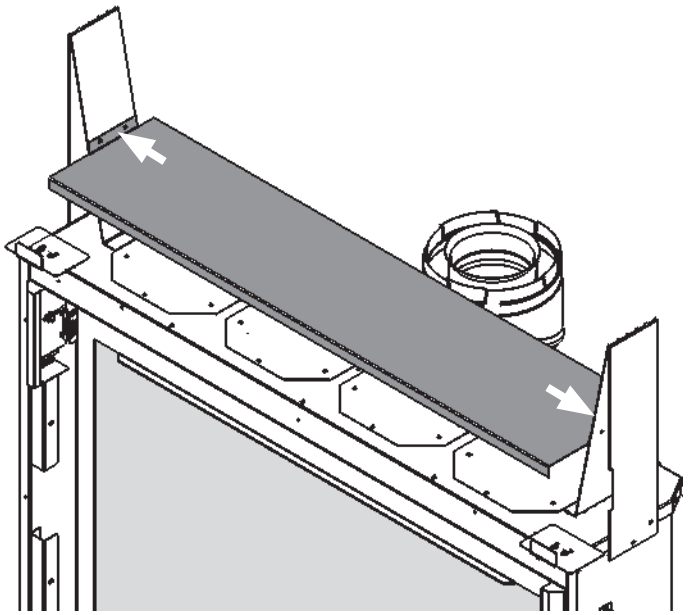

Convert Vent Take-Off (if required)

This unit is supplied with a top facing vent take-off which can be field-converted to a rear vent take-off. **Please note that the rear facing take-off requires the installation of the heat shield on top of the heater case as indicated** *unless fitted with optional HeatShift***.**

1. Remove top facing take-off (6 screws).

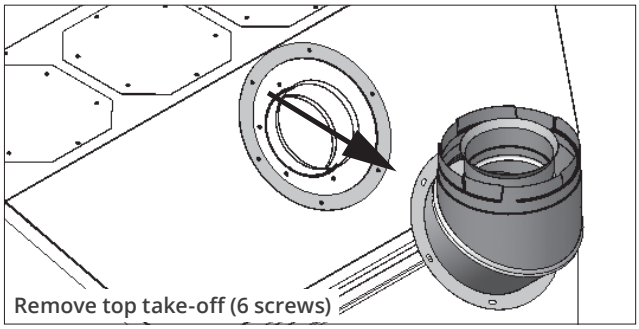

2. Swivel collar and install as a rear facing one (6 screws).
3. Reinstall heat shield to top of appliance case (3 screws).

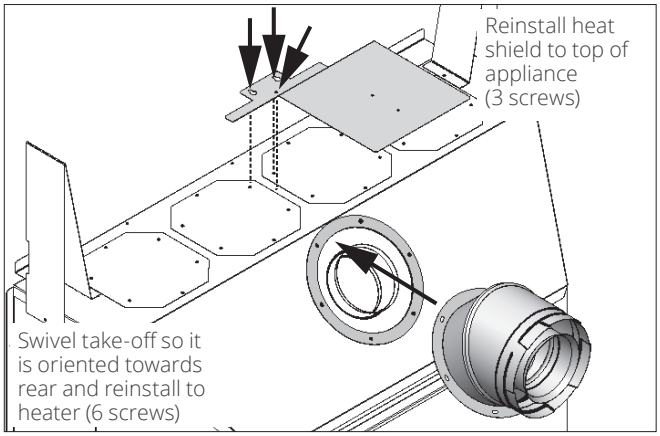

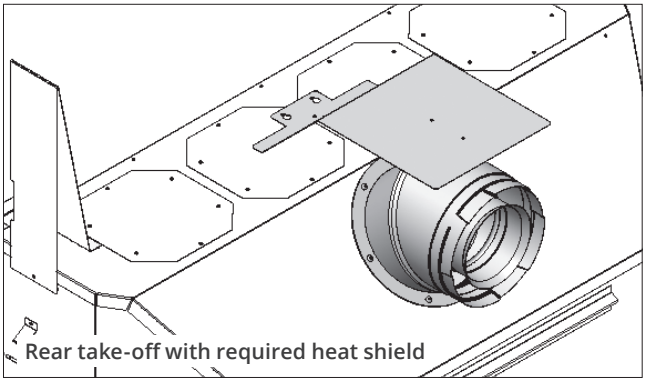

Remove Window

The window is held in place by 4 spring-loaded latches, 2 on each side of the firebox. A handle is necessary to unhook the latches.

1. Locate the handle on the bottom front of the fireplace. It is held in place by *Velcro*. Pull it out.

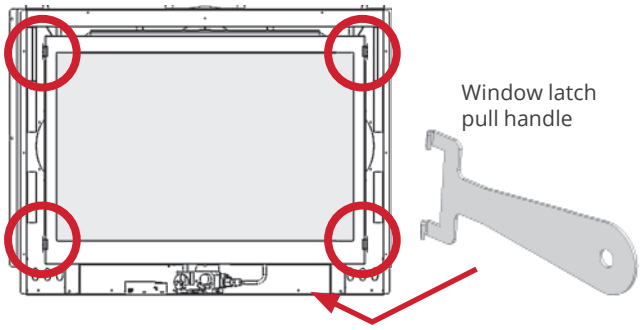

2. Locate the four latches around the window frame.
3. Starting with the bottom latches, hook the pull handle to the latches' vertical tabs and firmly pull forward and outward to unhook. Repeat with the top latches.

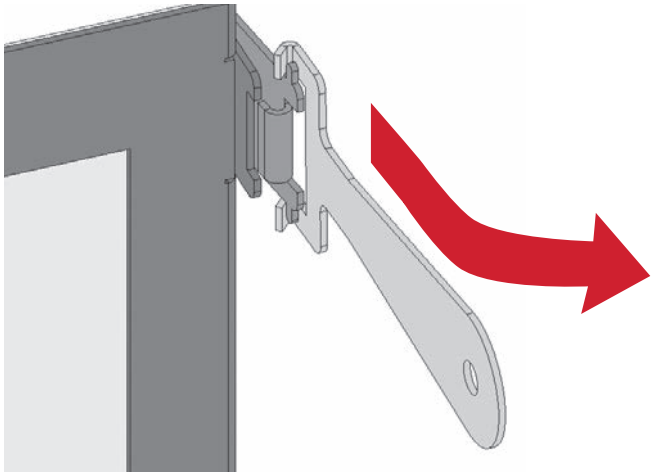

4. Carefully lift up the window and pull it outward.
5. Set it aside in a safe place to avoid damage.
6. Reattach the handle to its *Velcro* at the bottom of the fireplace so it is easy to find later.

Reinstall and Check Window

To reinstall the window you need the window latch pull handle, located on the bottom front of the fireplace.

1. Place the top window frame tabs on the firebox top and push against the firebox, ensuring it's centered left to right.

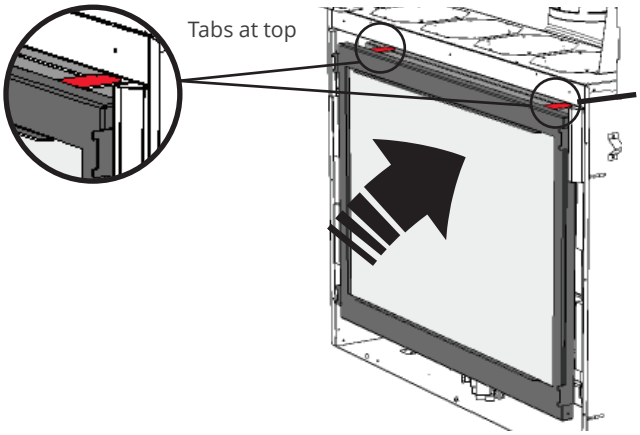

2. The window is secured by four spring-loaded latches which hook to two tabs on each side of the frame. While holding the top of the window to the firebox, hook the handle to the latches's vertical tabs and hook the top two latches to the frame's top tabs. Repeat with the bottom latches and tabs.

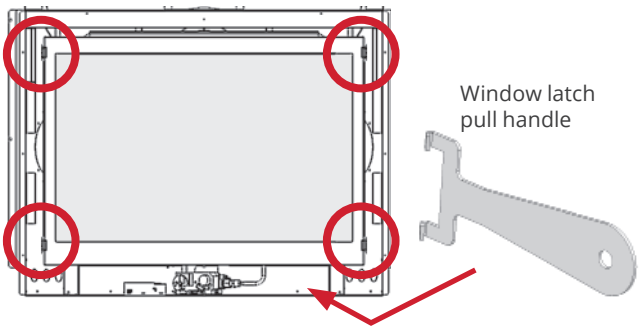

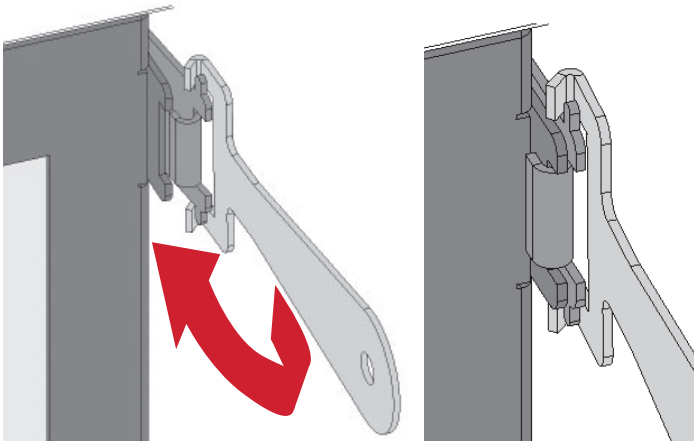

⚠ WARNING

The window unit must be correctly installed, fastened and sealed after servicing or serious bodily injury and/or damage to the appliance may result.

To ensure a safe operation:

- **Double-check that the top of the window frame is correctly installed;**
- **Verify that the spring-loaded latches are hooked properly to the four window tabs then;**
- **Pull out the top of the window and release it to ensure the springs return it; repeat with the bottom of the window;**
- **Ensure the window is sealed by pressing firmly around it before operation.**

⚠ WARNING

Failure to install the window correctly can:

- **Leak carbon monoxide.**
- **Affect the performance of the fireplace.**
- **Damage components.**
- **Cause overheating resulting in dangerous conditions.**

Damage caused by incorrect window installation is not covered by the Valor Warranty.

3. Firmly pull and release the top of the window frame to ensure the spring-loaded mechanism returns the window to the firebox. Repeat with the bottom of the window frame.
4. Apply firm hand pressure around window frame to make sure window is sealed tight against firebox.
5. Reattach the handle by its *Velcro* to the bottom of the fireplace so it is easy to find when needed.
6. **If the Hot Glass Warning plate has been removed from the front lower corner of the window, re-install it by sliding it between the glass and the frame as indicated.**

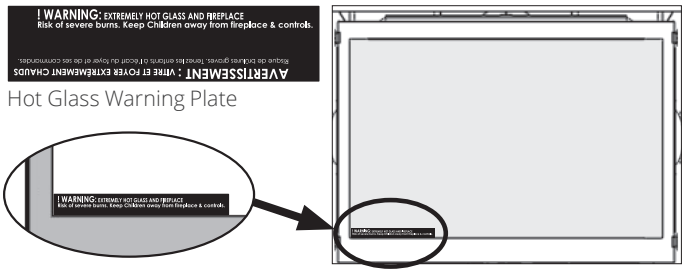

Hot Glass Warning Plate

Appliance Preparation

ONLY If You Are Installing HeatShift

Perform the following steps and see Appendix D - HeatShift System on pages 83-101 for more details regarding HeatShift planning and installation.

Remove Convection Baffle

To be effective, the HeatShift system requires that an internal convection baffle located above the firebox inside the appliance case be removed to allow the hot air flow to convect upwards into ducts installed on the fireplace.

Remove the convection baffle from the appliance. It is held in place by 3 screws located right behind the upper edge of the fireplace opening. Recycle this panel as it is no longer needed.

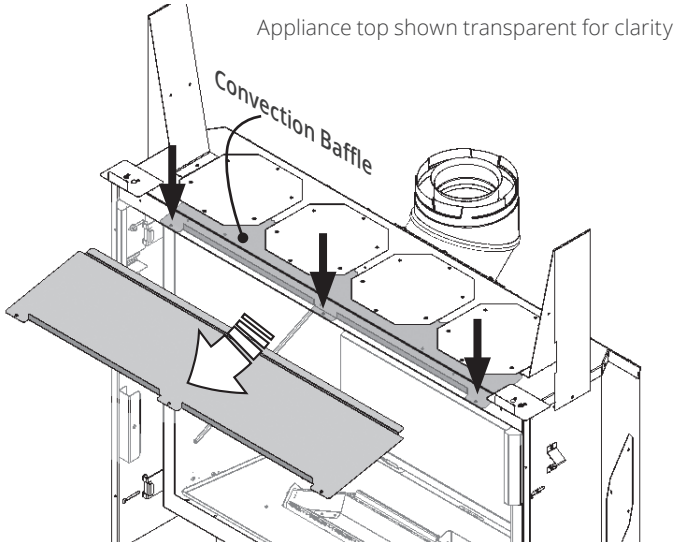

Remove convection baffle—1100M

Install HeatShift Take-Off Collars

1. Remove the four cover plates on top of the appliance case (6 screws each).

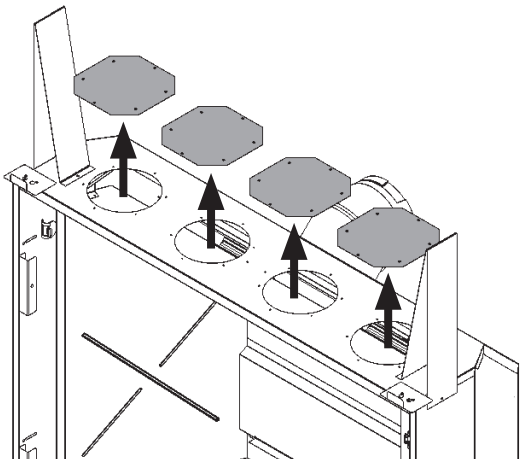

2. Install the four take-off collars on the holes on top of the appliance's case (6 screws each).

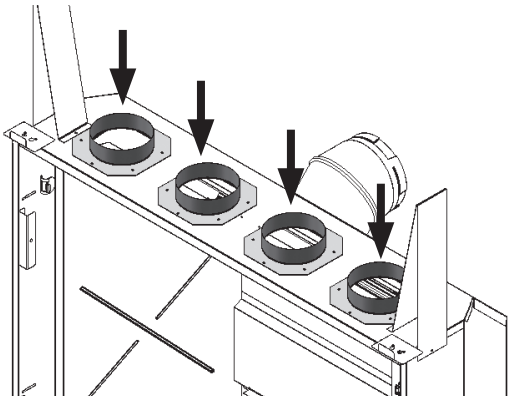

⚠ WARNING

The H5 fireplace requires the removal of the internal convection baffle for the HeatShift system to function properly—read instructions carefully!

⚠ WARNING

All FOUR (4) takeoffs MUST BE CONNECTED TO PLENUM(S).

Install Electrical Wiring (if needed)

This section provides information to install the electric pre-wiring required for use with the 1195CFK Circulating Fan Kit or GV60WIFI WiFi module.

We recommend connecting the electrical box even if the optional accessories have not been purchased. It is much easier to wire before the trim is installed and the wall finish is applied.

⚠ WARNING

All wiring must be done by a qualified electrician in accordance with local codes or, in the absence of local codes, with the National Electrical Code, ANSI/NFPA 70 or the Canadian Electrical Code, CSA C22.1.

Electrical Requirements

1195CFK—120 V, 60 Hz, less than 1 amp

GV60WIFI—6 VDC (from receiver), less than 1 amp

General Requirements

Both optional 1195CFK and GV60WIFI kits require a GV60VM power supply (V-module), which includes a three-prong grounded plug to plug into a grounded receptacle, to be installed within the fireplace enclosure by a qualified electrician.

Notes

- Wiring within the receptacle enclosure must have a minimum 90°C temperature range.
- Wire nuts not included.
- The 1195CFK kit includes a junction box and receptacle as well as a V-module. See instructions package with the kit.
- The GV60WIFI kit includes a WiFi module only. It requires H5/6-WPK—WiFi Power Kit J-box and GV60VM—V-module (all sold separately) if the fan kit is not installed. See instructions packaged with the kit.

⚠ WARNING

NO ELECTRICAL CONNECTION ALLOWED for any outdoor installation!

Installation

Thread the power supply cable through the cable clamp (not provided) and through the hole in the lower left hand side of the fireplace casing. Do not tighten the clamp yet.

If simply roughing in power at this point, ensure wiring is not live or terminate at this location in a temporary metal junction box using wire nuts to cap wires.

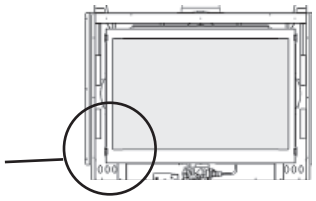

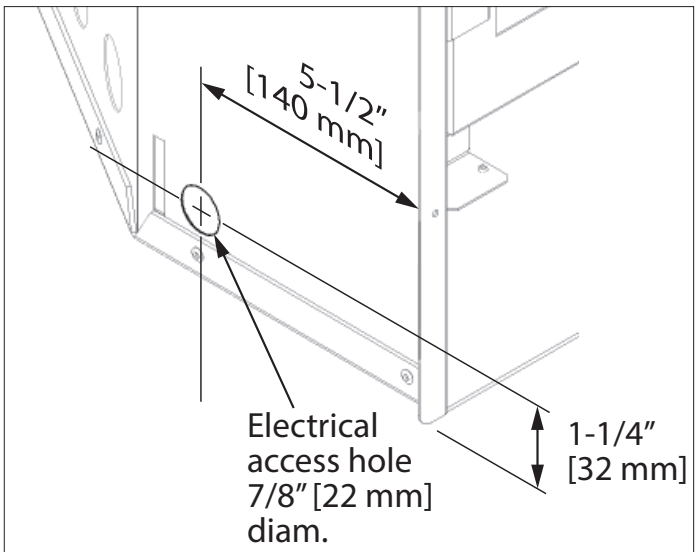

Electrical access—left side view

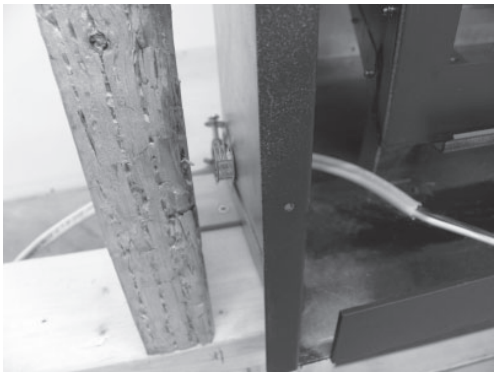

Install Appliance for Fixed Framing Kit

1. Unpack the 1130FFK kit checking that you have all the pieces on hand.

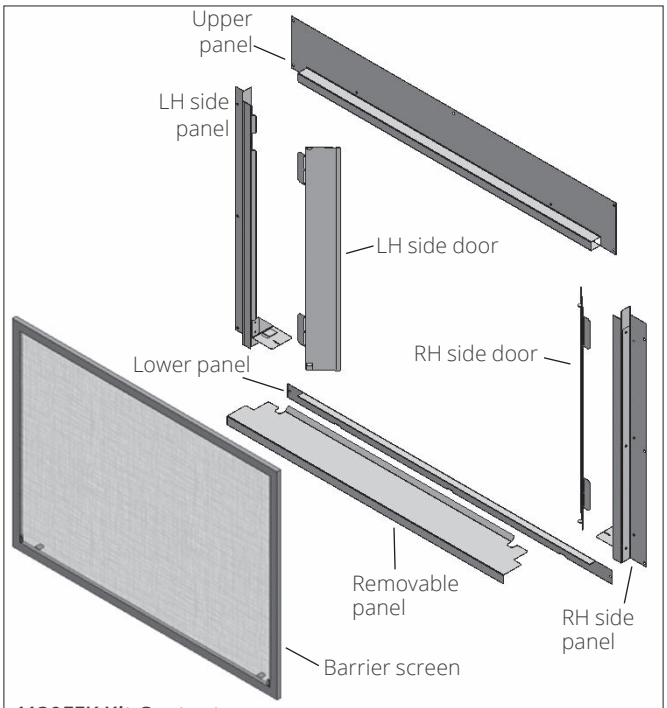

1130FFK Kit Content

2. On top of appliance's case, in front of the stand-offs, remove positioning brackets (2 screws each).

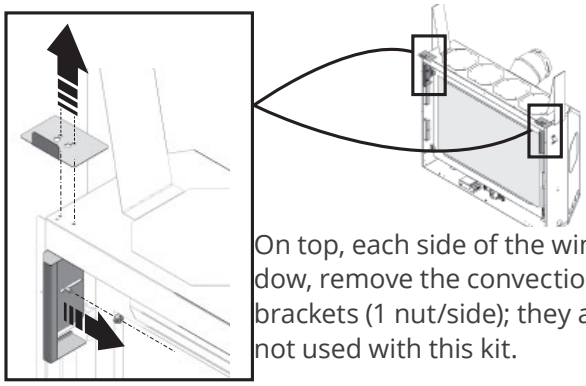

On top, each side of the window, remove the convection brackets (1 nut/side); they are not used with this kit.

3. At bottom of appliance case, install the lower panel provided with the kit, as indicated (3 nuts).

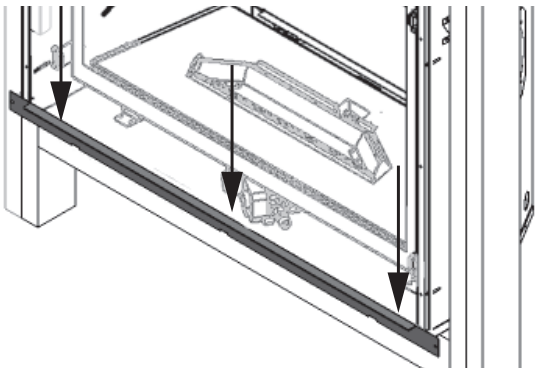

4. On the appliance, install the side panels as indicated (3 screws per side).

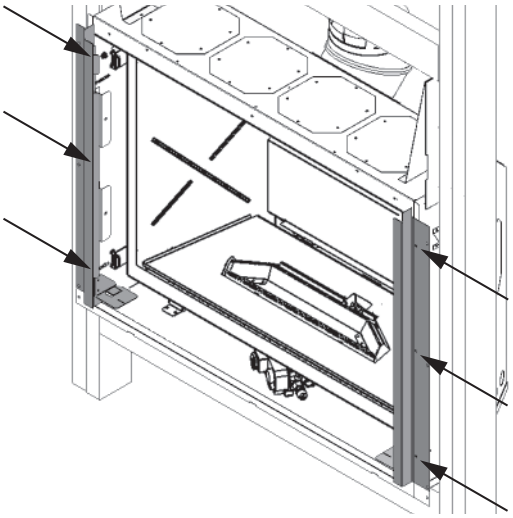

5. Install the upper panel as indicated (2 screws).

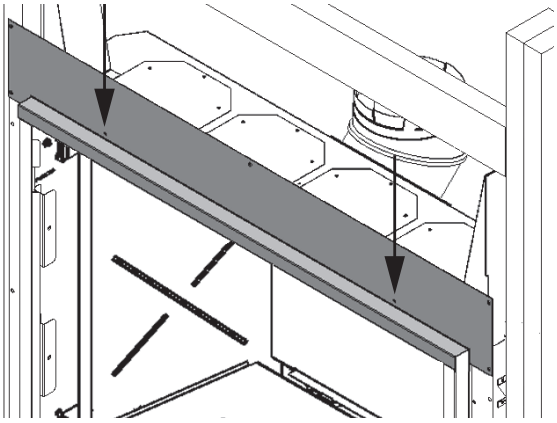

6. Slide the appliance into the framing and secure it to the studs on each side (6 fixing points per side).

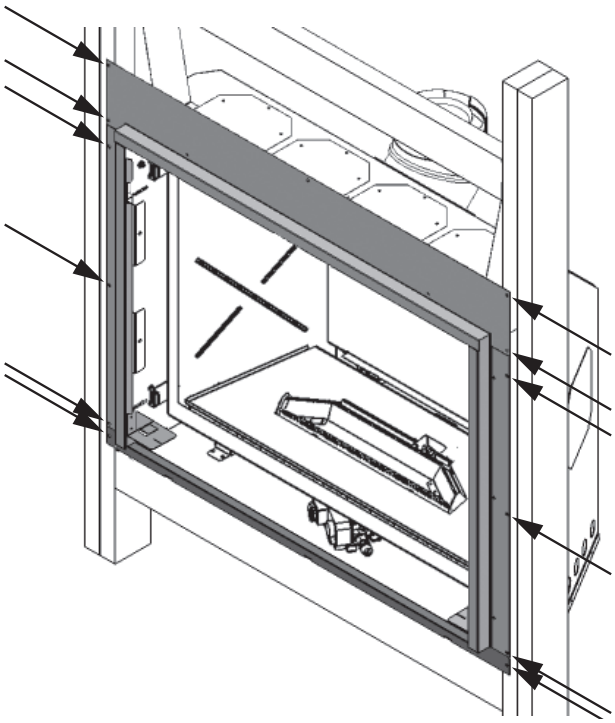

7. Set aside the side doors, removable panel and barrier screen to install later when the appliance's set-up and wall finish application are completed.
8. Continue the installation of the fireplace.

Installation

With 1130CIK—Clean Install Kit

Install Appliance for Clean Install Kit

1. Unpack the 1130CIK kit checking that you have all the pieces on hand.

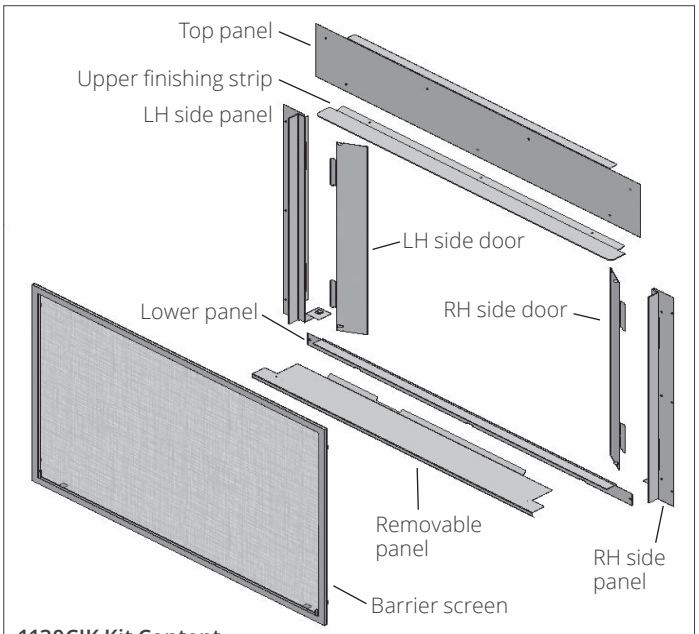

1130CIK Kit Content

2. On top of the appliance's case in front of the stand-offs, remove the positioning brackets (2 screws each).

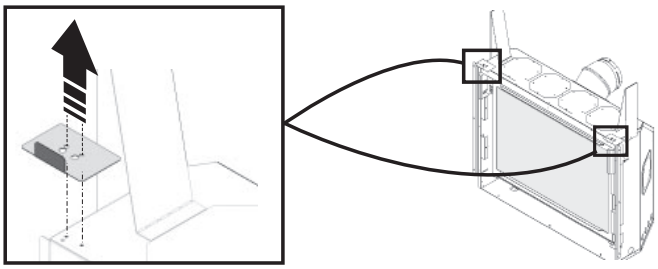

3. On top, each side of the window, remove the convection brackets (1 nut/side).

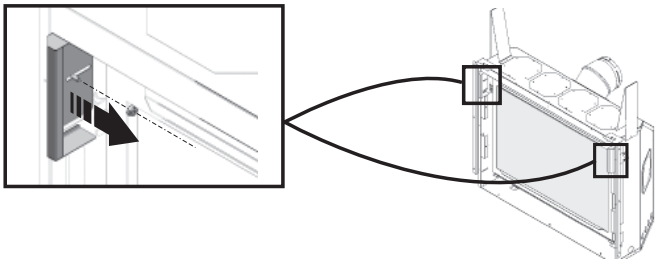

4. On each side of the firebox, remove, from outside of the appliance's case, four brackets which are used with other fronts (2 screws each).

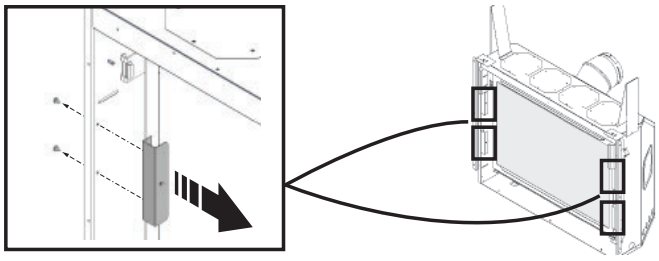

Installation

1. Align the appliance with the cavity, and push it in until the front face is flush with the studs.

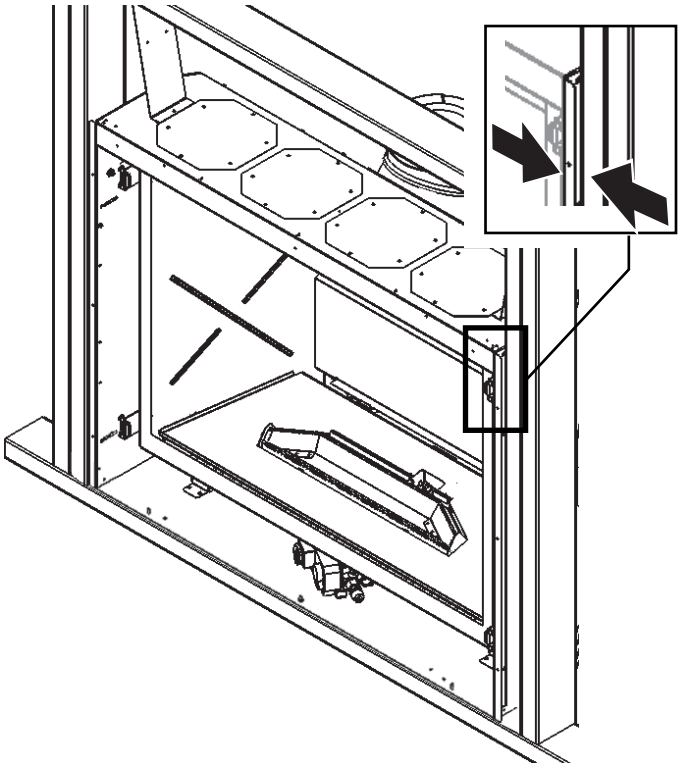

2. Install the lower panel using the three studs at the base of the appliance (3 nuts).

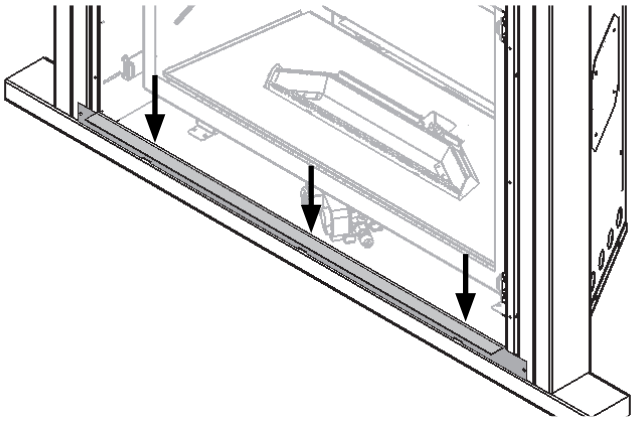

3. On the appliance, install the side panels as indicated (3 x 1/2" screws per side).

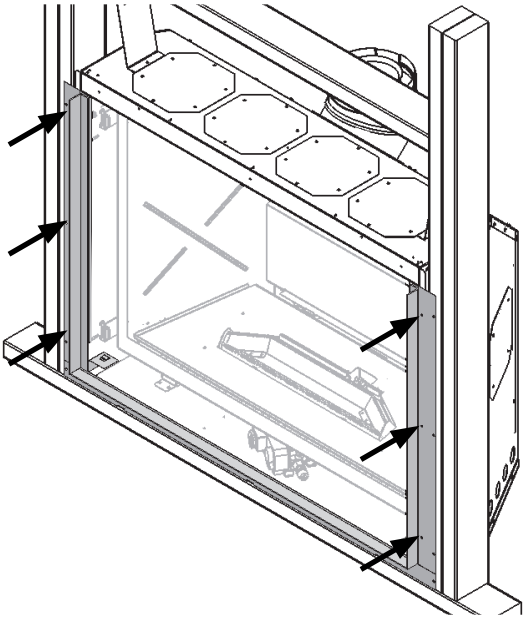

4. Install the upper finishing strip under the appliance`s case top edge:

   With no HeatShift. Remove the 3 screws retaining a removable convection baffle and slide the finishing strip over the baffle`s tabs, then secure the strip and baffle together with 3 countersunk screws supplied.

   ONLY with HeatShift. Remove the 3 screws retaining the removable convection baffle, remove the baffle, then slide the finishing strip over the screw holes and secure it with 3 countersunk screws supplied. Discard the convection baffle.

> **NOTE**
>
> **Use of the optional HeatShift System requires the convection baffle to be removed above the firebox. See Appliance Preparation, Optional HeatShift on page 47 or Appendix D - HeatShift System on pages 83-102.**

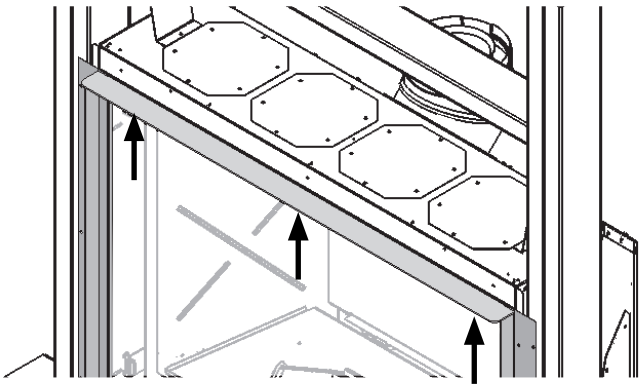

5. Install the top panel as indicated (3 x 1/2" screws).

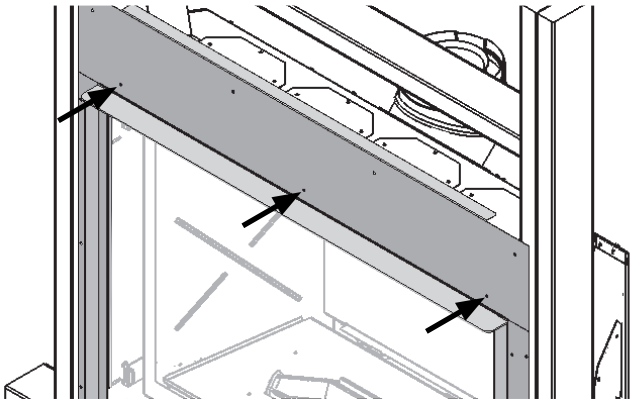

6. Ensure the appliance is snug against the framing and secure it to the studs on each side (5 fixing points per side). Use wood screws (not supplied).

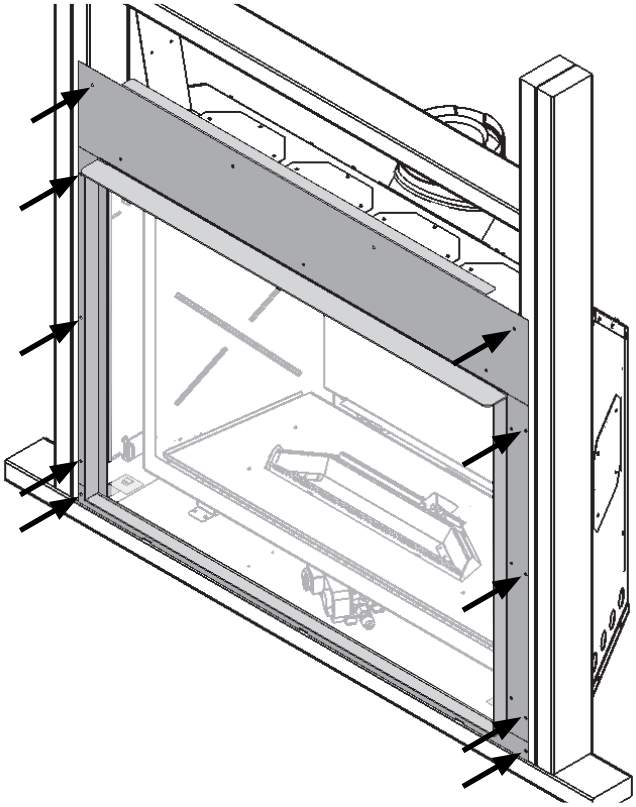

7. Set aside the side doors, removable panel and barrier screen to install later when the appliance's set-up and wall finish application are completed.
8. Continue the installation of the appliance.

Install Appliance for 3 or 4-Sided Trims

Place appliance in framing

1. Install stud brackets on each side of appliance (2 screws per bracket). Use the hole or slot according to the thickness of wall finish—see Planning, Framing—3-4 sided trims on page 27.

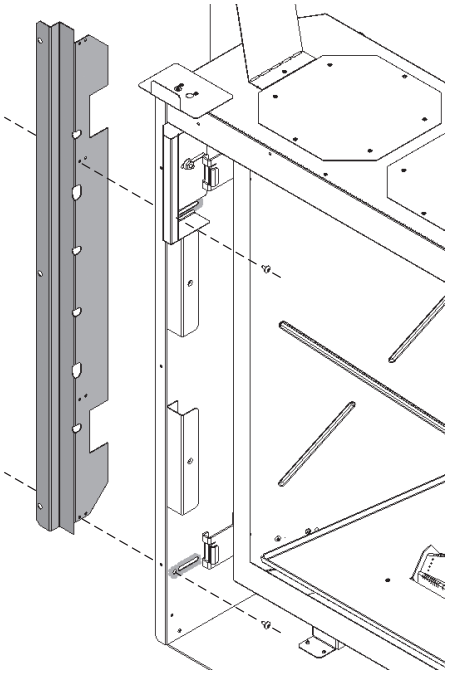

2. Taking great care not to cut your hands on sheet metal edges, lift appliance up and insert into framing. *Ensure that unit is at the right height with consideration to the height of hearth or combustible flooring.* When setting the position of the appliance within the framing, the front surface of the positioning bracket indicated should always be flush with where you anticipate the finished wall surface to be. Adjust the position of the side brackets to suit.
If in doubt, allow for slightly less material thickness as the trims have additional 3/4" of adjustment.

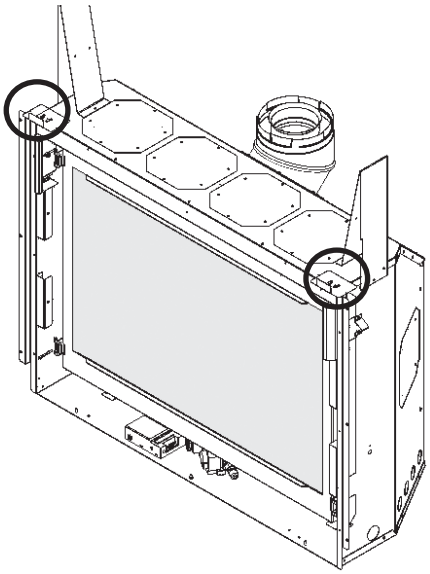

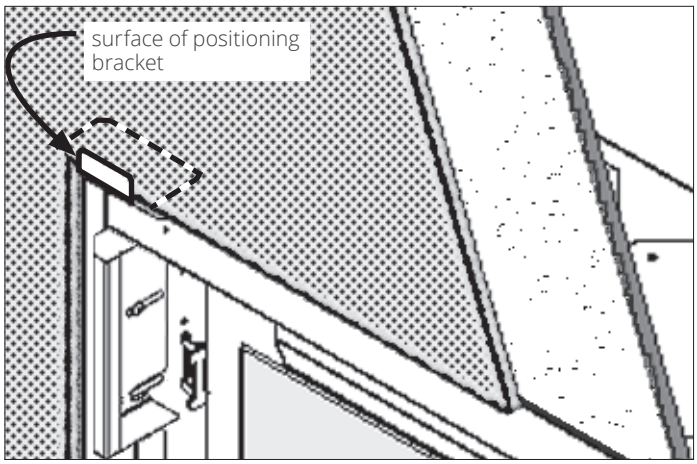

Complete Installation of Optional HeatShift (if used)

See HeatShift installation instructions in this manual Appendix D - HeatShift System on pages 83-102.

Connect Gas Supply

The gas supply inlet connection is a 3/8" NPT male connector located on the right hand side of the firebox.

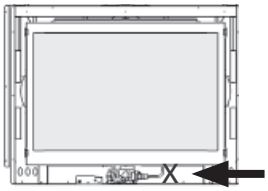

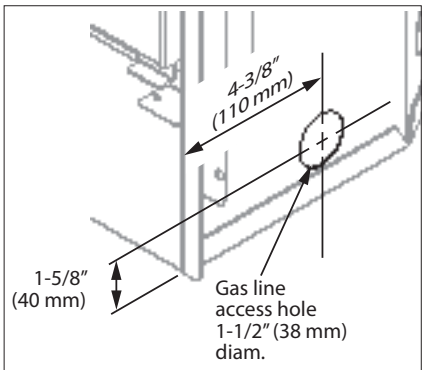

Gas line access—right side view

The unit is supplied with a stainless steel flex line to allow the appliance to be disconnected for service. An individual shut-off valve (not supplied) is required on the supply line ahead of the flex connector.

Use only new black iron or steel pipes, CSST, or copper tubing if acceptable—check local codes. **Note that in USA, copper tubing must be internally tinned for protection against sulfur compounds**.

Unions in gas lines should be of ground joint type.

The gas supply line must be sized and installed to provide a supply of gas sufficient to meet the maximum demand of the appliance without undue loss of pressure.

Sealant used must be resistant to the action of all gas constituents including propane gas. Sealant should be applied lightly to male threads to ensure excess sealant does not enter gas lines.

Pressure test the supply line for leaks

The appliance and its individual shut-off valve must be disconnected from the gas supply piping system during any pressure testing of that system at test pressures in excess of 1/2 psig (3.5 kPa).

The appliance must be isolated from the gas supply piping system by closing its individual manual shut-off valve during any pressure testing of the gas supply piping system at test pressures equal to or less than 1/2 psig (3.5 kPa).

Failure to either disconnect or isolate the appliance during pressure testing may result in regulator or valve damages and void the warranty. Consult your dealer in case of damages.

Pressure Test Points

The minimum supply pressure is given in the section *Specifications* of this manual—page 6.

All piping and connections must be tested for leaks after installation or servicing. All leaks must be corrected immediately.

When testing for leaks:

Caution

Never use an open flame to check for leaks! Correct any leak detected immediately.

- Make sure that the appliance is turned off.
- Open the manual shut-off valve.
- Test for leaks by applying a liquid detergent or soap solution to all joints. Bubbles forming indicate a gas leak.

The pressure test tapping locations are shown in the figure below. An internal regulator within the valve controls the burner manifold pressure.

The correct pressure range is shown in the table in section *Specifications* of this manual on page 6. The pressure check should be made with the burner alight and at its highest setting. See Appendix A - Lighting Instructions Plate on page 74 in this manual for full operating details.

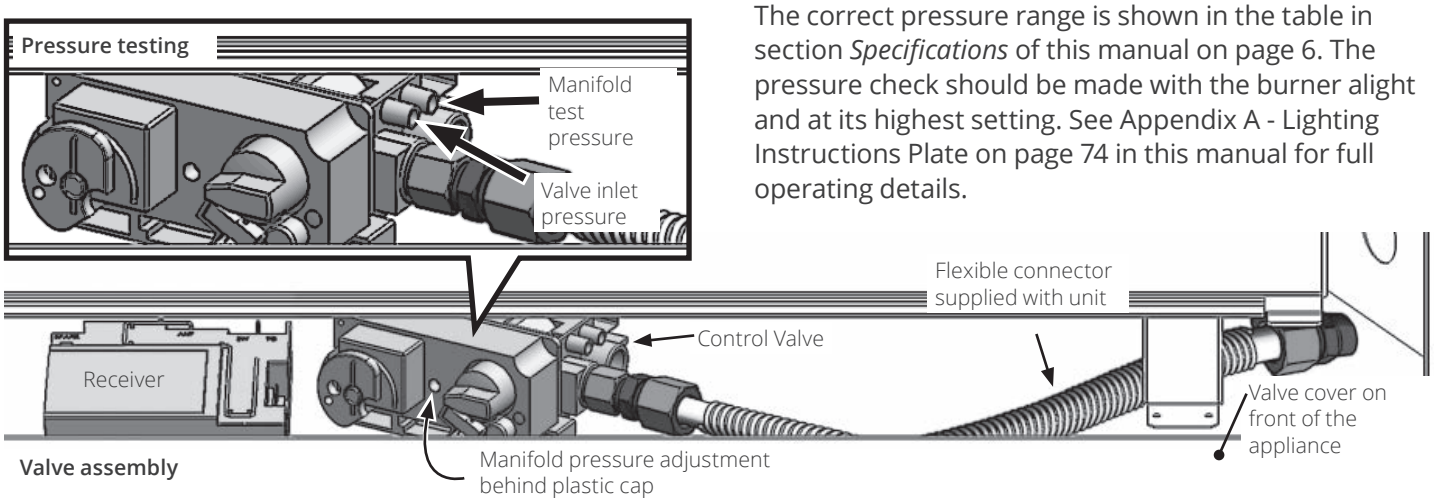

Valve assembly

Install Liners

The following guidelines apply for all liners with the exceptions of the **1170RGL Reflective Glass Liners**—see the instructions provided with this liner set.

1. Inside the firebox, remove the burner cover (4 screws).

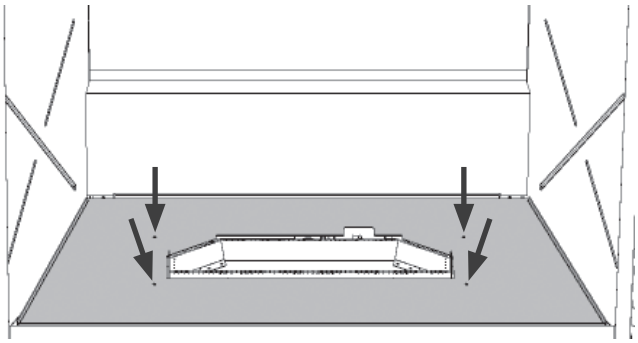

2. Loosen the 4 screws on the side panel anchors so they can rotate freely (two per side).

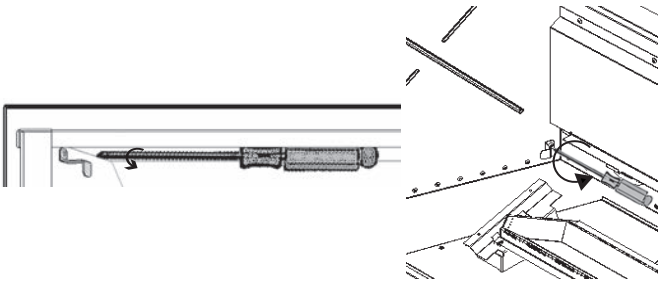

3. Insert the bottom of one of the side panels in the firebox rotating it slightly to fit it totally into the firebox. Place it against the side wall. Rotate the side panel anchors to hold the panel in place and retighten the screws.

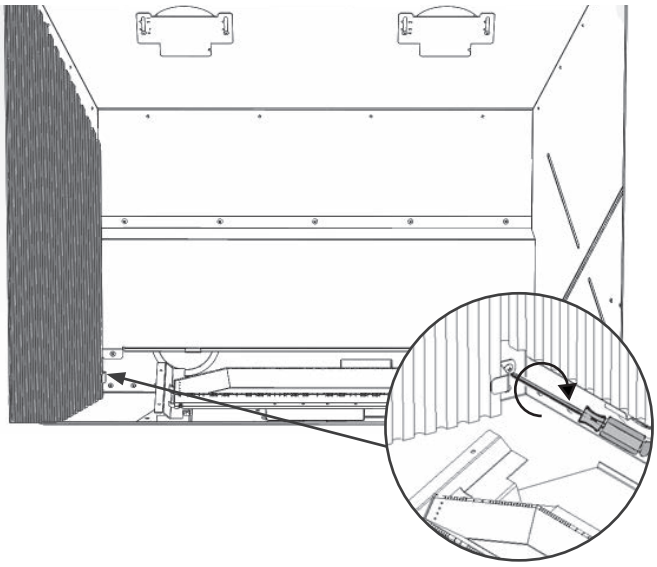

4. Place the rear panel, top edge angled, against the back of the firebox behind the rail retainers at the bottom and slide it behind the side panel already installed.

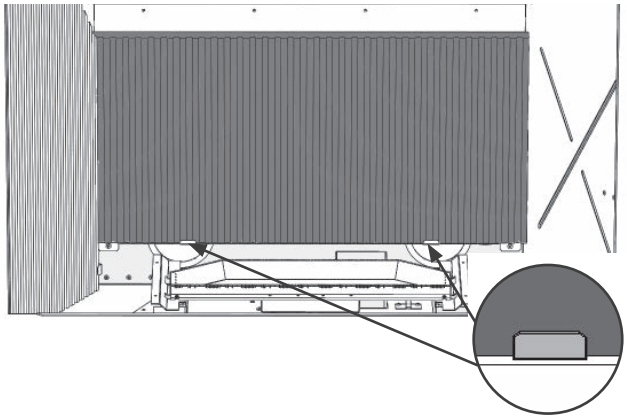

5. Insert the bottom of the other side panel in the firebox rotating it slightly to fit it totally into the firebox. Place it against the side wall. Rotate the side panel anchors to hold the panel in place and retighten the screws.

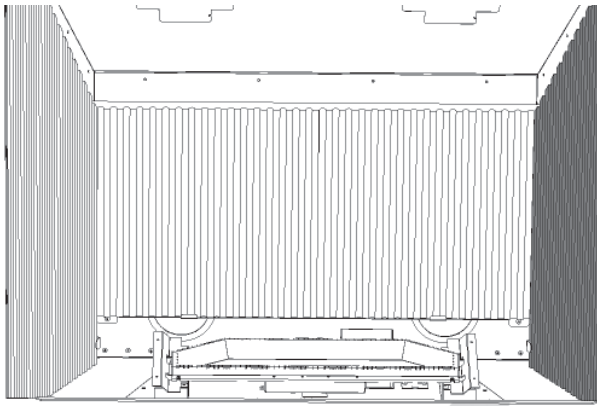

6. Insert the top panel into the firebox on top of the side and rear panels, beveled edge towards the back of the firebox. Slide it across to rest on both side panels and rear panel.

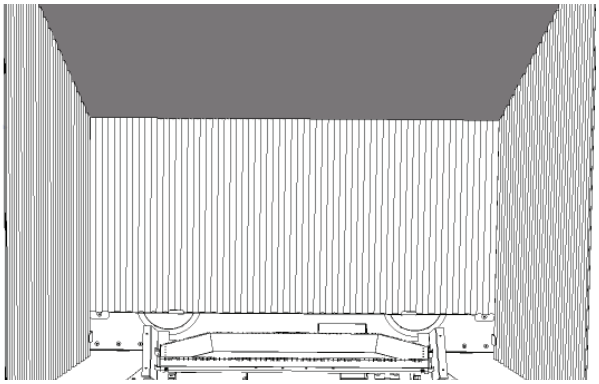

7. Replace the burner cover and secure it (4 screws).

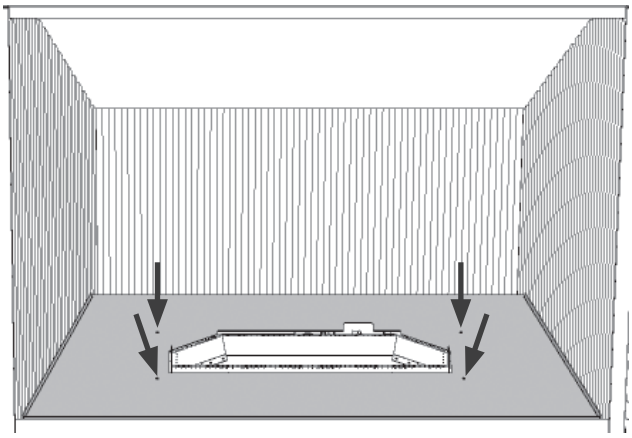

Birch Logs 1100BLK

Material required

- Birch log kit, which contains:
  - 7 logs
  - 1 ember bed
  - 4-piece ceramic plaque
- Gloves, if desired (not supplied)

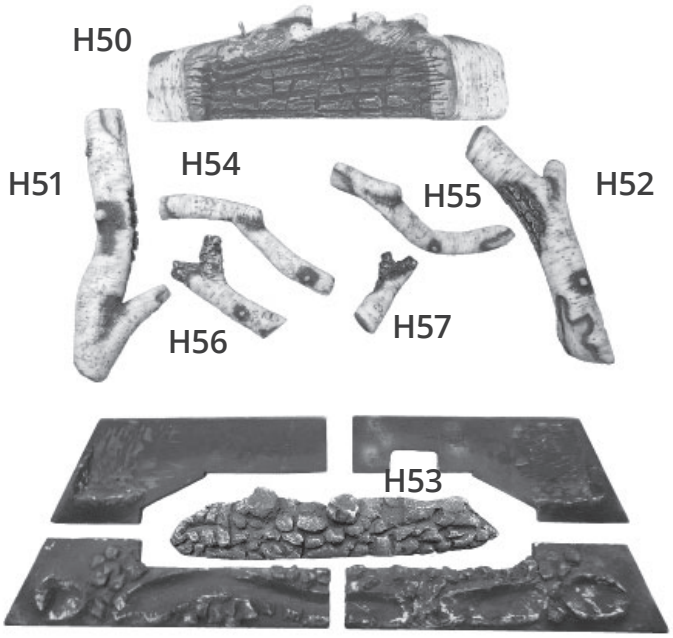

Installation

Carefully unpack the kit. Each log is stamped at the bottom with an alpha-numeric code to help identify it.

Ceramic Plaque

1. Place the front left and right ceramic pieces of the plaque on the burner cover as shown.

2. Place the rear right ceramic piece.

3. Place the rear left ceramic piece.

NOTE: Ensure the plaques are as forward as possible against the metal edge of the burner cover.

Ceramic plaque installed

Logs

1. Place ember bed H53 onto the burner. Carefully locate it centered left to right and front to back.

Ensure the ember bed is properly vertical and does not cover the front burner ports. There should be a gap between the front of the ember bed and the plaque as shown below.

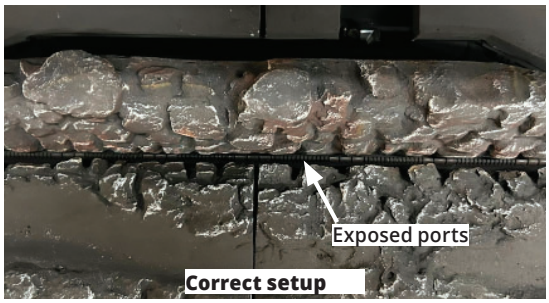

2. Place log H50 behind H53; bring log forward to rest it on both sides against the raised part of the rear ceramic plate pieces.

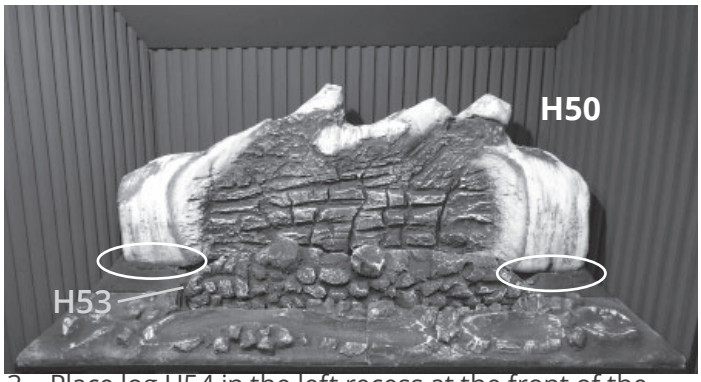

3. Place log H54 in the left recess at the front of the ceramic plaque as shown.

4. Place log H55 in the right recess at the right of the ceramic plaque and on the right flat knob on H53.

5. Place log H52 on the rear log's right pin, resting its other end in the recess in the plaque.

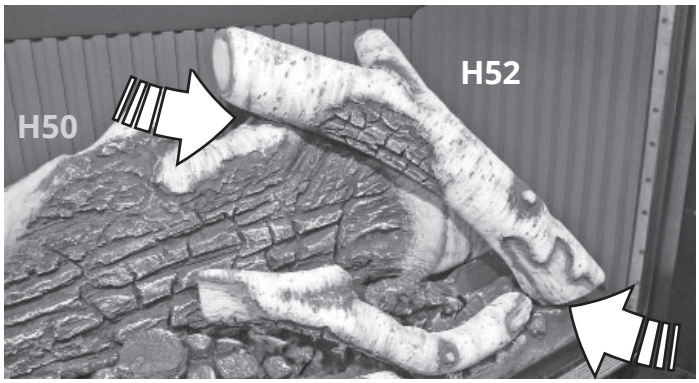

6. Place log H51 on the rear log's left pin, resting its forked end in the recess in the plaque.

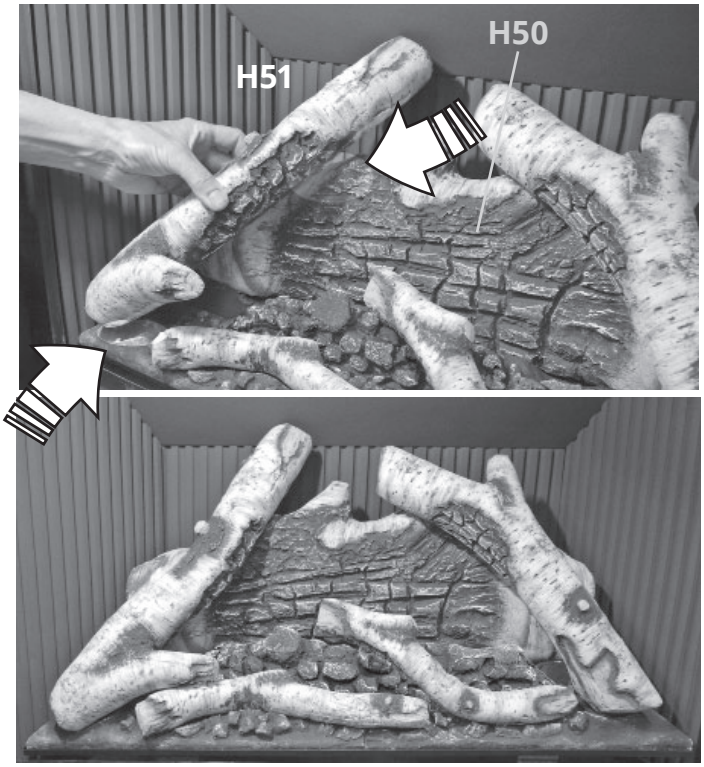

H51 installed

7. Place the bigger 'Y' shaped log H56 resting its forked end on the flat knob of H53 and its other end on H54.

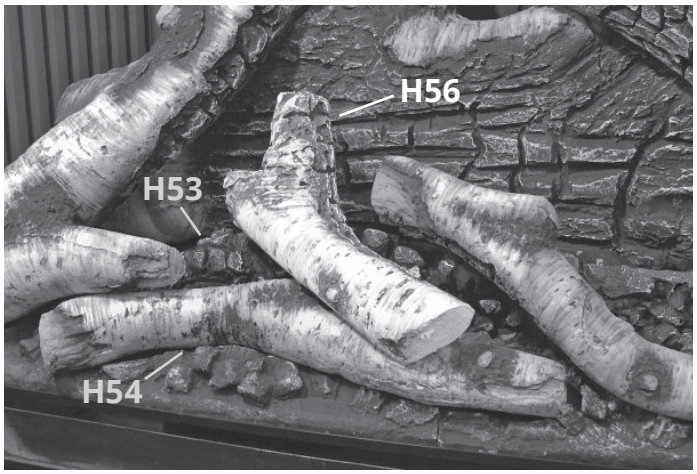

8. Place smaller 'Y' shaped log H57 resting its forked end on the center log H53, on a horizontal plane; its other end on H55.

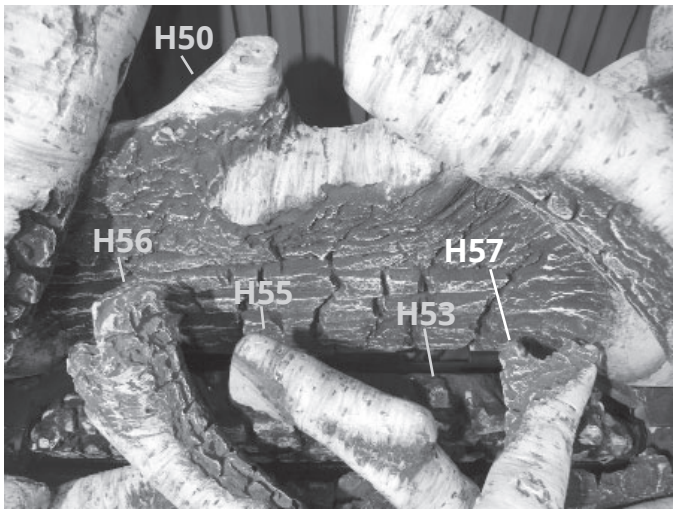

H57 installed—top view

NOTE

Logs H56, H55 and H57 resting on top of ember bed H53 DO NOT touch the rear log H50.

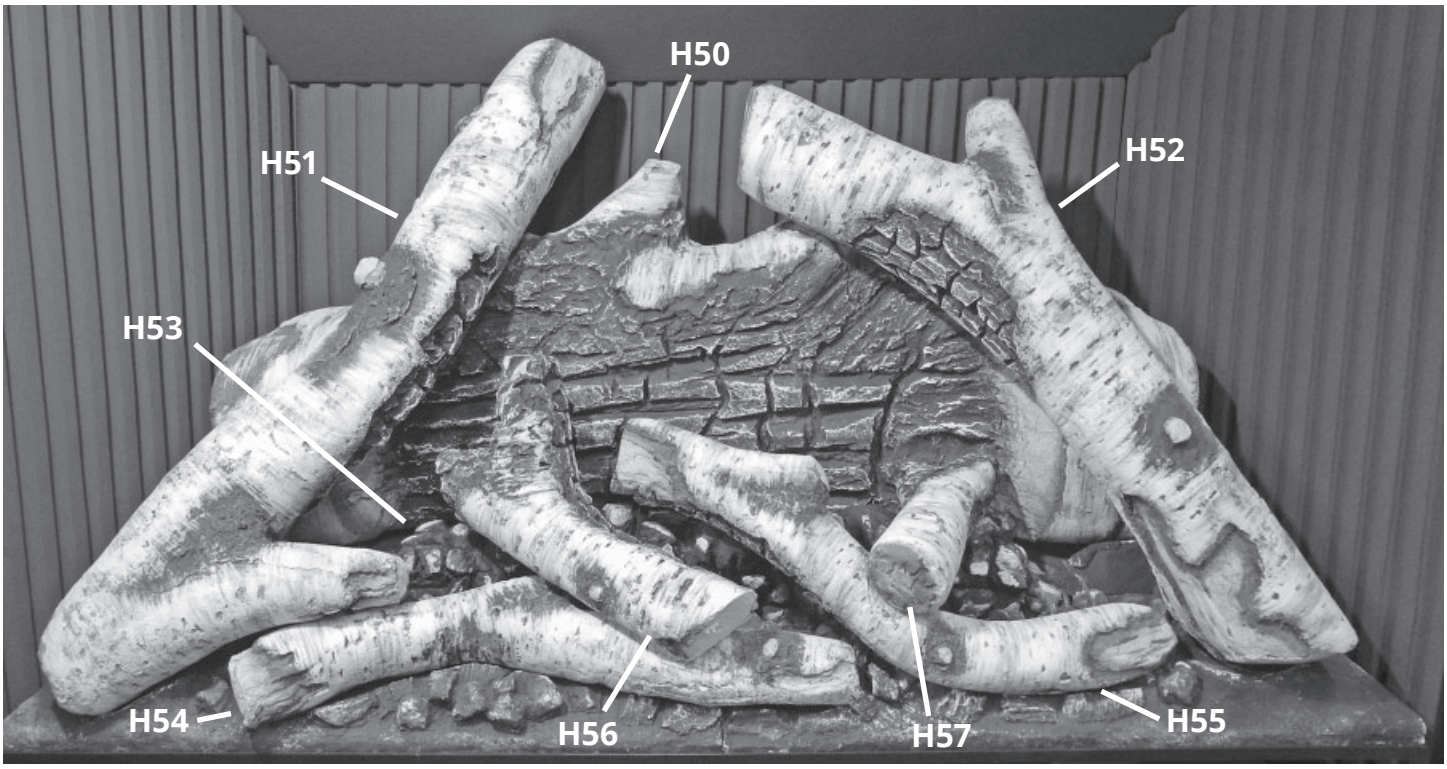

1100BLK installed

Driftwood Kit 1100DWK

Material required

- Driftwood Kit, which contains:
  - 4 logs
  - 4-piece ceramic plaque
  - 7 pebbles
- Gloves, if desired (not supplied)

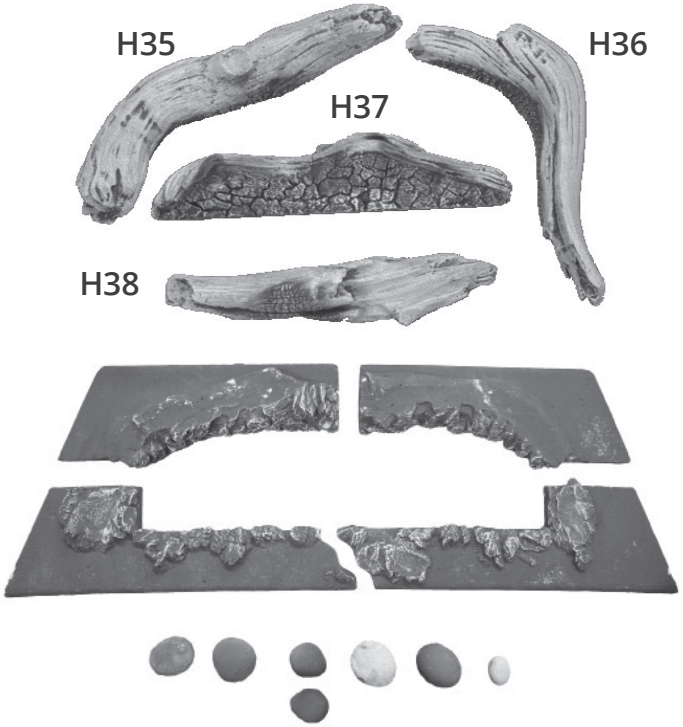

Installation

Carefully unpack the kit. Each log is stamped at the bottom with an alpha-numeric code to help identify it.

Ceramic Plaque

1. Place the front left ceramic piece of the plaque on the burner cover.

2. Place the front right ceramic piece.

3. Place the rear left ceramic piece.

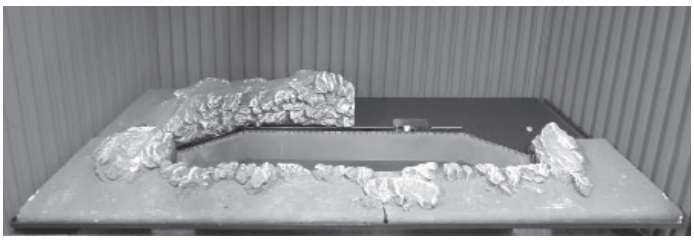

4. Place the rear right ceramic piece.

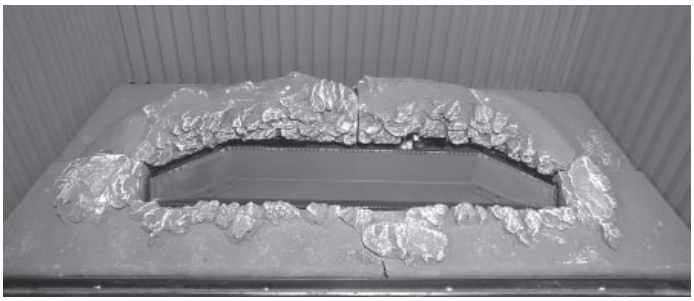

Ceramic plaque installed

NOTE: Ensure the plaques are as forward as possible against the metal edge of the burner cover.

Logs

1. Place ember bed H37 onto the burner. Carefully locate it centered left to right and front to back.

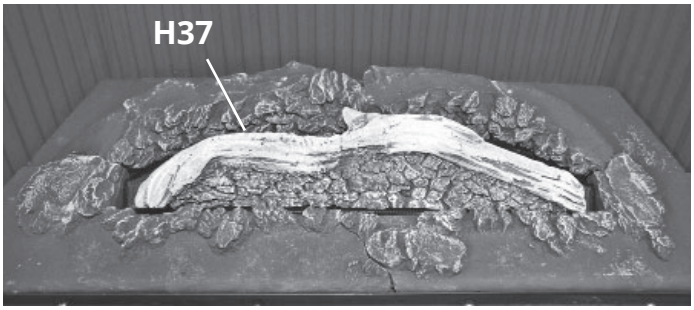

Ensure the ember bed is properly vertical and does not cover the front burner ports. There should be a gap between the front of the ember bed and the plaque as shown below.

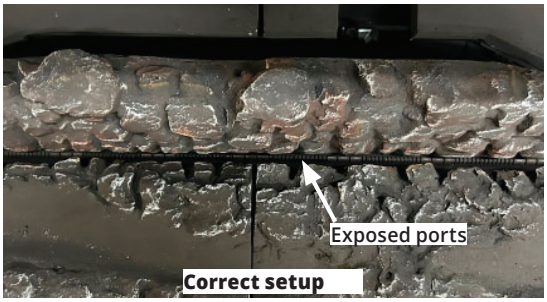

2. Install log H36 on the right side of the plaque resting it into depressions as shown.

H36 installed

3. Install log H35 on the left side of the plaque resting it into depressions as shown.

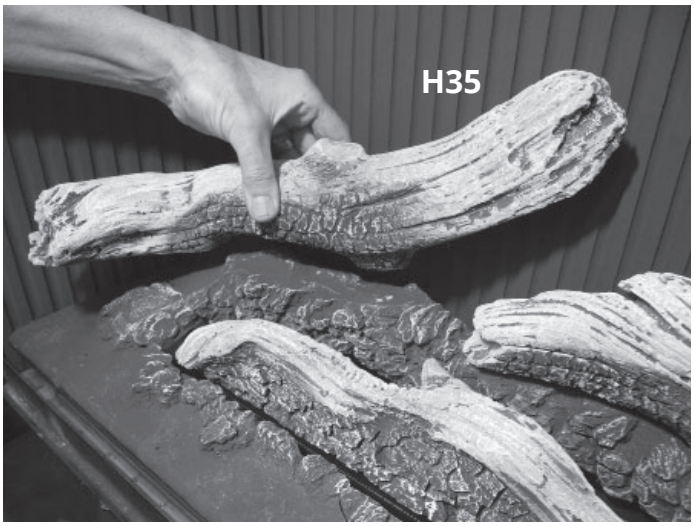

H35 installed

4. Install log H38 resting it on the knot on top of H35 and placing its other end in the indent at the front of the ceramic base as shown.

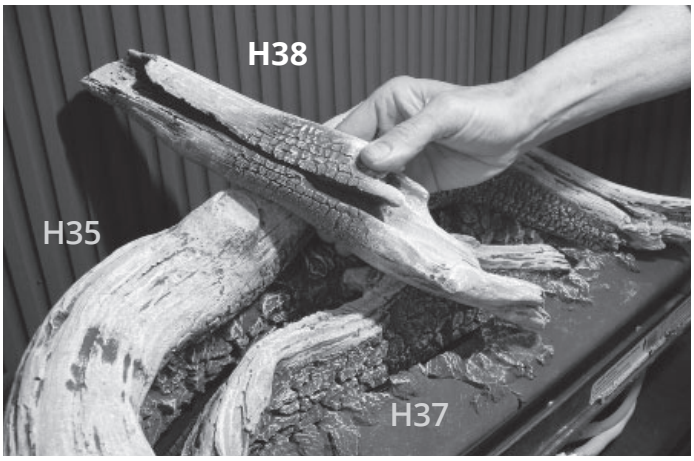

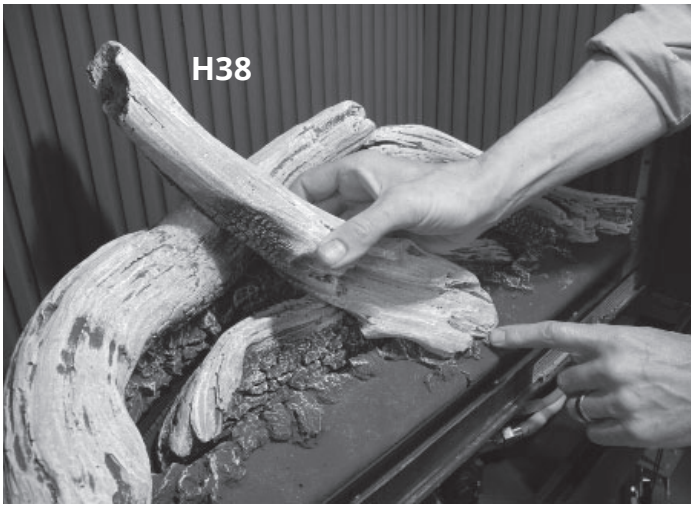

Logs installed

5. Add pebbles on the ceramic plaque only, as desired.

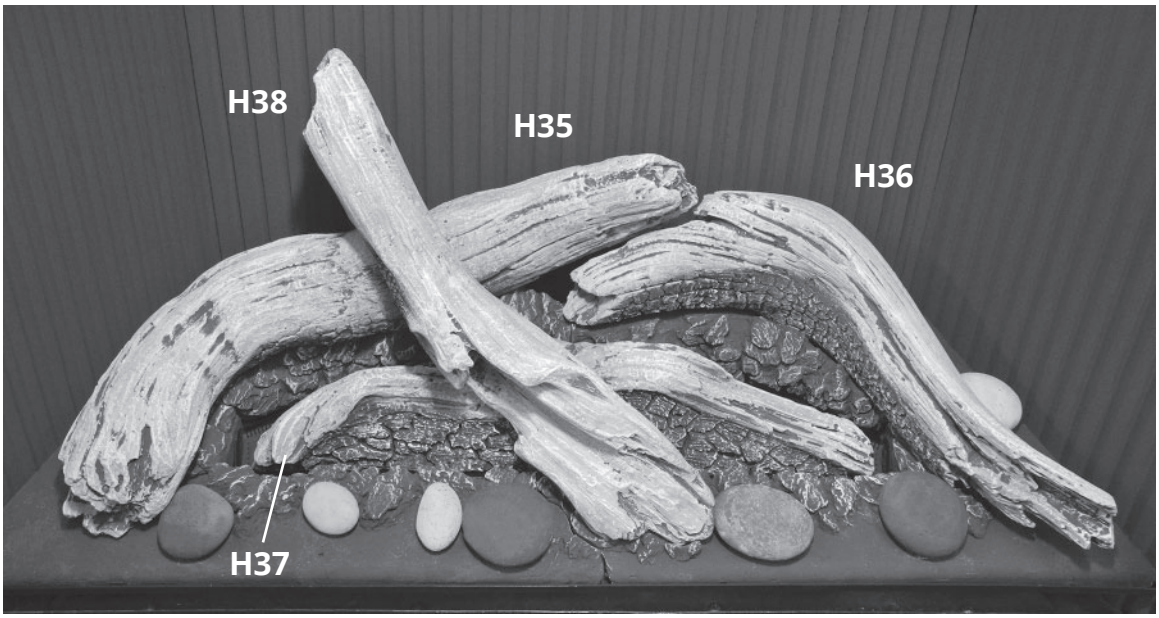

Traditional Logs 1100LSK

Material required

- Traditional log kit, which contains:
  - 7 logs
  - 1 ember bed
  - 4-piece ceramic plaque
- Gloves, if desired (not supplied)

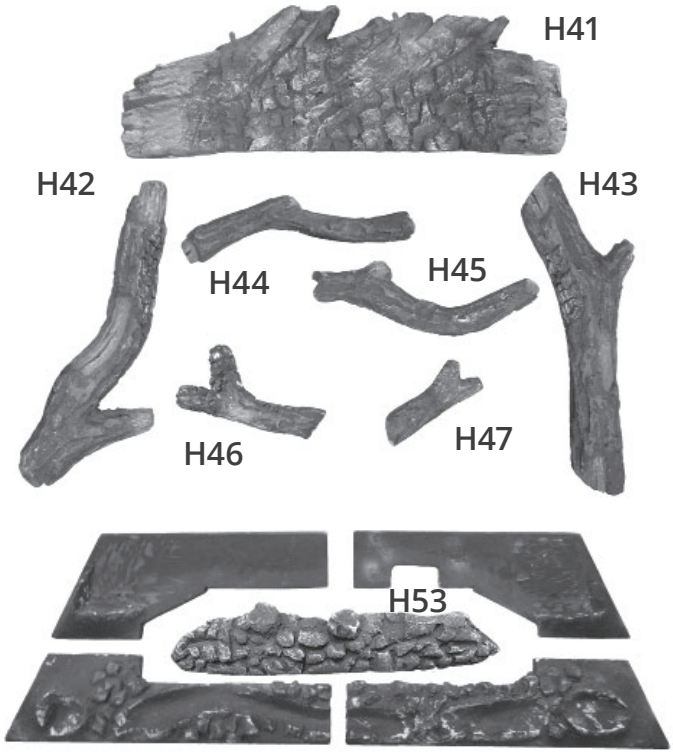

Installation

Carefully unpack the kit. Each log are stamped at the bottom with an alpha-numeric code to help identify it.

Ceramic Plaque

1. Place the front left and right ceramic pieces of the plaque on the burner cover.

2. Place the rear right ceramic piece.

3. Place the rear left ceramic piece.

Ceramic plaque installed

NOTE: Ensure the plaques are as forward as possible against the metal edge of the burner cover.

Logs

1. Place ember bed H53 onto the burner. Carefully locate it centered left to right and front to back.

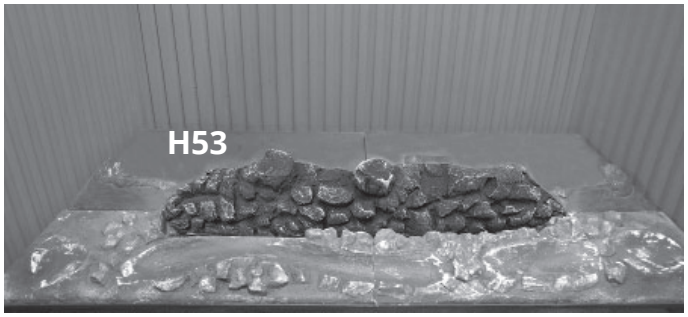

Ensure the ember bed is properly vertical and does not cover the front burner ports. There should be a gap between the front of the ember bed and the plaque as shown below.

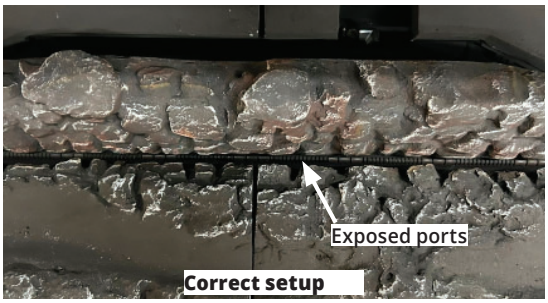

2. Place log H41 behind H53; bring log forward to rest it on both sides against the raised part of the rear ceramic plate pieces.

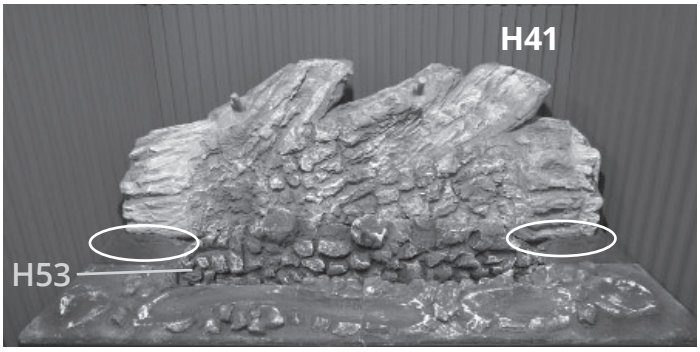

3. Place log H44 in the left recess at the front of the ceramic plaque.

4. Place log H45 in the right recess at the right of the ceramic plaque and on the right flat knob on H53.

5. Place log H43 on the rear log's right pin, resting its base in the recess in the plaque.

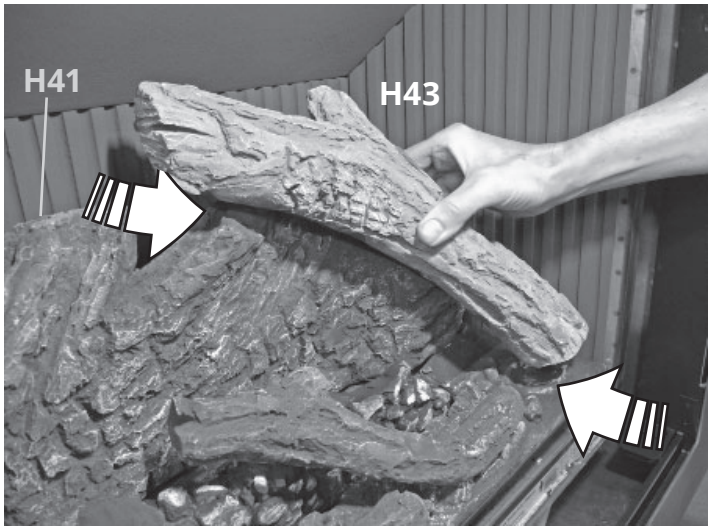

6. Place log H42 on the rear log's left pin, resting its base in the recess in the plaque.

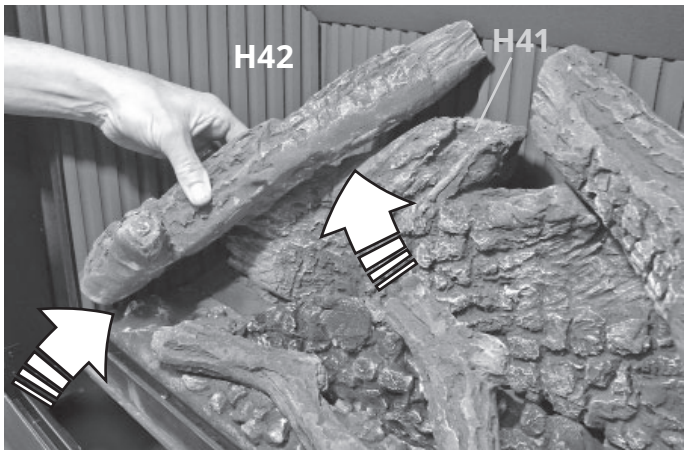

H42 & H43 installed

7. Place the bigger 'Y' shaped log H46 resting its forked end on the flat knob of ember bed H53 and its other end on a flater surface of H44.
   NOTE the space between H44 and H46 as indicated.

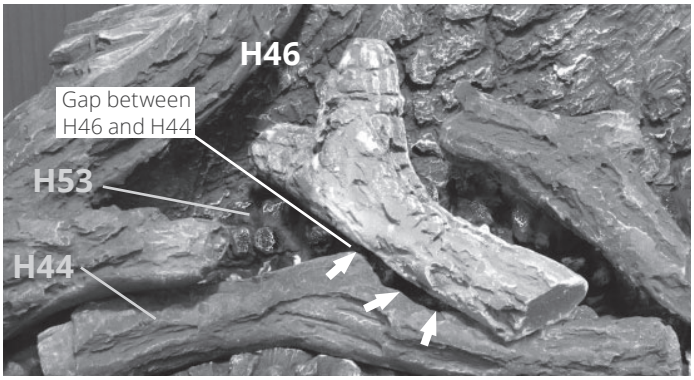

8. Place smaller 'Y' shaped log H47 resting its forked end on ember bed H53, on a horizontal plane; its other end on H45.

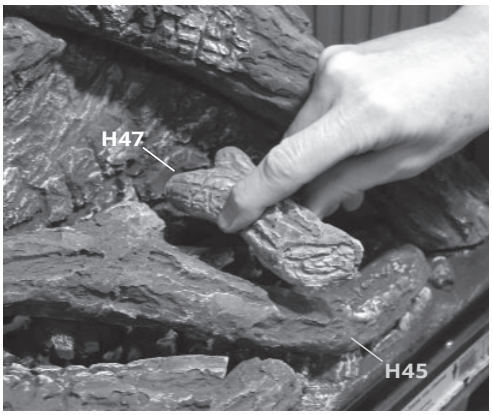

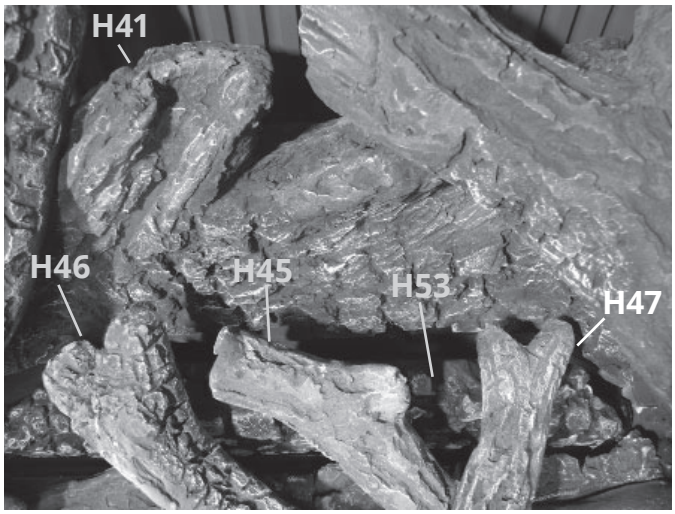

H47 installed—top view

NOTE

Logs H46, H45 and H47 resting on top of ember bed H53 DO NOT touch the rear log H41.

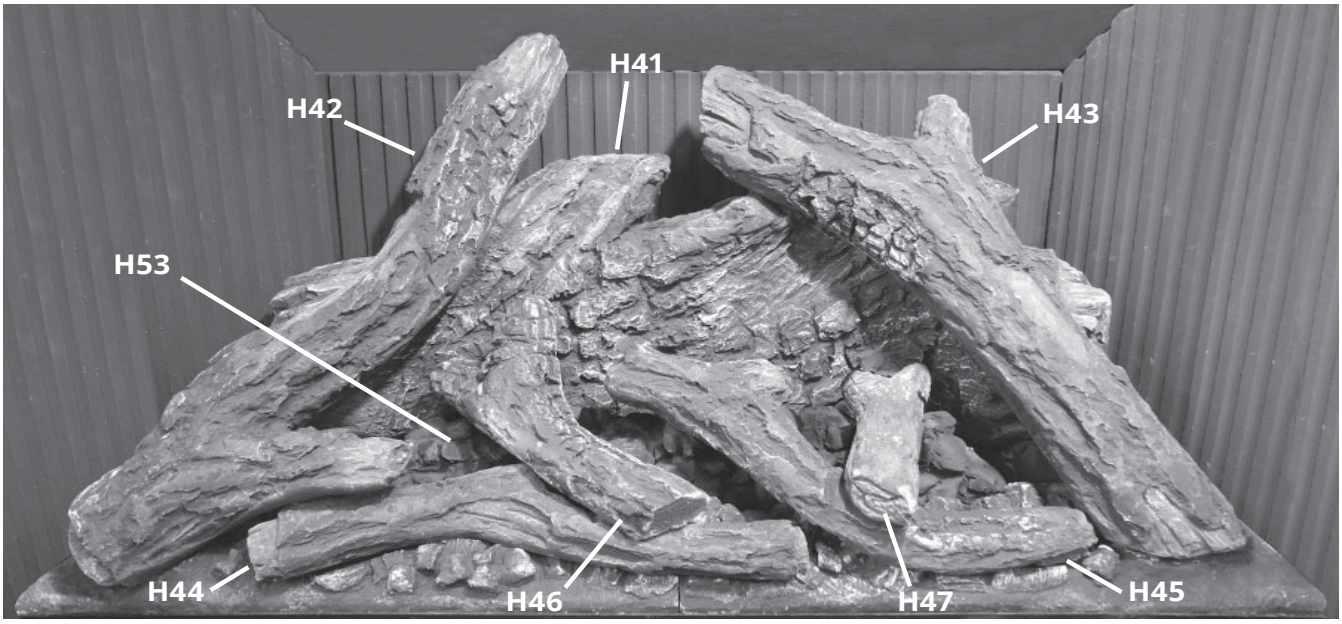

1100LSK installed

Install Remote Battery and Wall Switch Kit (required)

The Remote Battery and Wall Switch Kit is provided with this appliance. It connects to the receiver in the fireplace.

The receiver is located under the firebox, left of the control valve. It is maintained in position with **Velcro** bands.

1. Pull out the receiver from its location to connect the battery holder and wall switch.
2. Feed the 'white connector end' of the harness assembly through side holes in fireplace liner body to receiver. Ensure sufficient harness length to allow for removal of receiver. Note - coil up any extra harness at fireplace end.
3. Connect white connector to auxillary 5-pin junction, and power connection to jack.

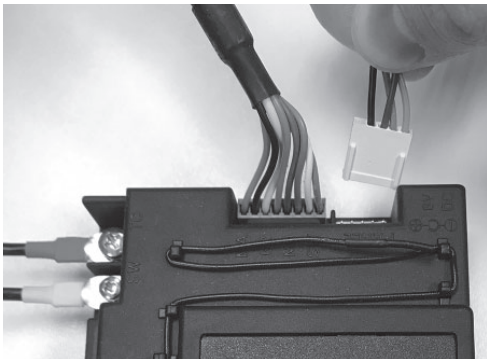

IMPORTANT: The connection can only be done one way.

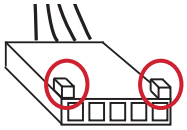

Do not force it or damage the pins on the receiver box!

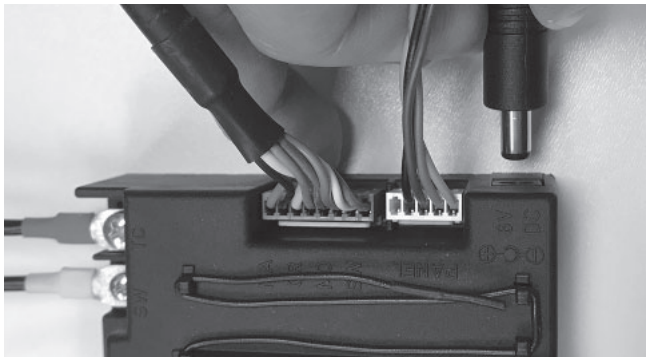

⚠ Caution

DO NOT PUT BATTERIES IN THE BATTERY HOLDER until the wires are connected to the burner control unit as short-circuit could result in the destruction of the electrical components.

Do not run the switch wire over the top of the firebox. Route the wire so it does not contact the firebox.

4. Run harness assembly to mounted position of junction box, securing harness to framing using insulated staples (not included)
5. Feed harness assembly through a restrain on rear of junction box, feeding through until harness sheath is pinched by retainer and providing sufficent length to make connection to rear of switch and battery holder.

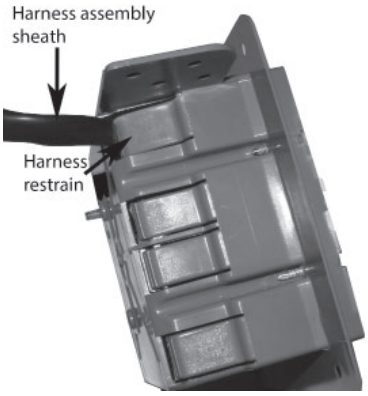

6. Secure junction box to the mounting surface using appropriate fasteners (not included)
7. Align molex connection on switch cable of harness assembly and connect to switch.

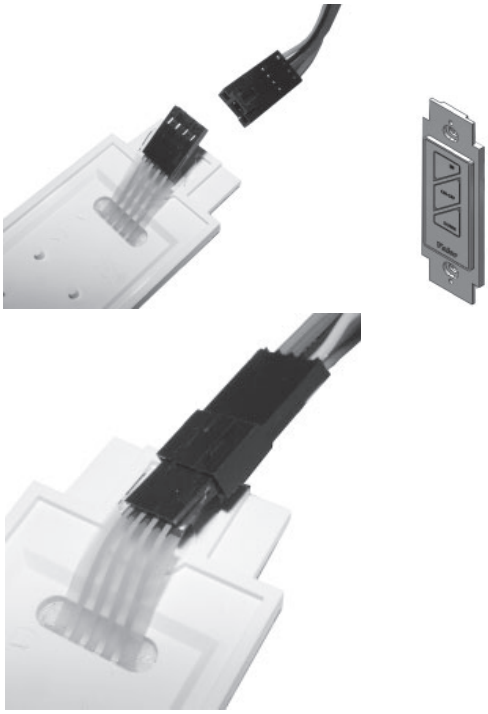

Installation

Remote Battery and Wall Switch

8. Mount switch plate to junction box with 2 long screws provided. Note: switch position left or right to suit homeowner wishes.

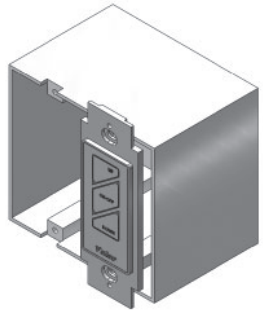

9. Locate and secure magnet plate using 2 'long' screws provided

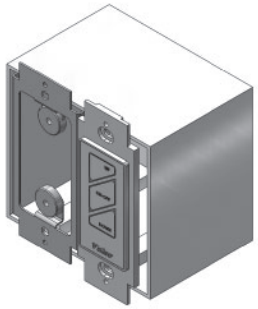

10. Place and secure cover plate to box using 4 screws provided

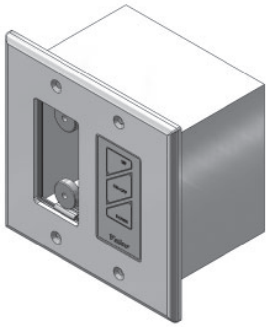

⚠ Caution

DO NOT USE a screwdriver or other metallic object to remove the batteries from the battery holder or the handset! This could cause a short circuit to the receiver.

To avoid short-circuit to the receiver, position the antenna so that it DOES NOT TOUCH the ignition wire.

11. Feed cable tie through the 2 side slots of battery cover assembly.
12. Position battery holder to rear face and secure together with cable tie. note clearance is required for battery snap connection.

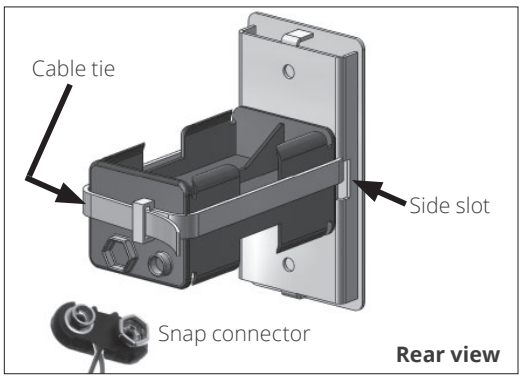

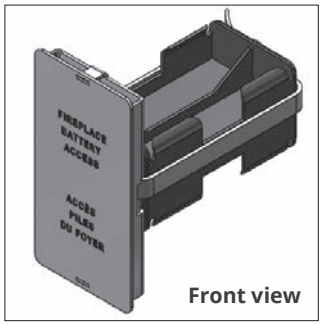

13. Make the snap connection, load 4 AA alkaline batteries into holder (included with fireplace) then feed back into junction box assembly.
Note: Do not put batteries in the receiver, only in the battery holder by the wall switch.

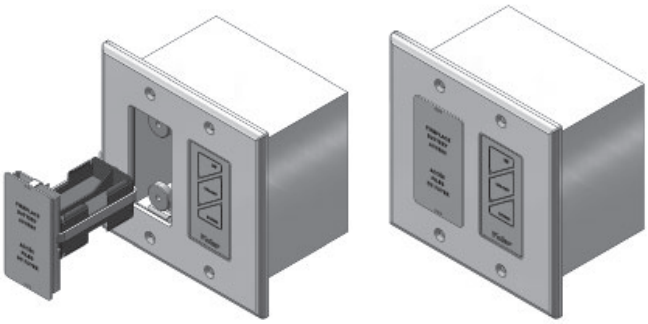

14. Test the operation of the wall switch—see Appendix C - Wall Switch Operation on page 82.

Installation

Remote Control Set-Up

Remote Control Initial Pairing

The receiver and the handset of the remote control system must be initially paired before the first use. (Note that batteries must already be installed in the wall mounted battery holder)

1. Insert two 1.5 V AAA **alkaline** batteries in the handset.
2. Locate the Reset button on the front side of the receiver.
3. With a thin object, press and hold the receiver's RESET button until you hear one short and one long beeps. After the second beep, release the reset button.
4. Within the subsequent 20 seconds, press and hold the ▼ button on the remote handset for 2-3 seconds. COM will be displayed on the handset during the pairing sequence. You will hear two short beeps confirming the pairing is done.

If you hear one long beep, the pairing sequence has failed or the wiring is incorrect.

This is a one time pairing only and is not required when changing the batteries of the handset or battery holder. The remote control system is now ready to use.

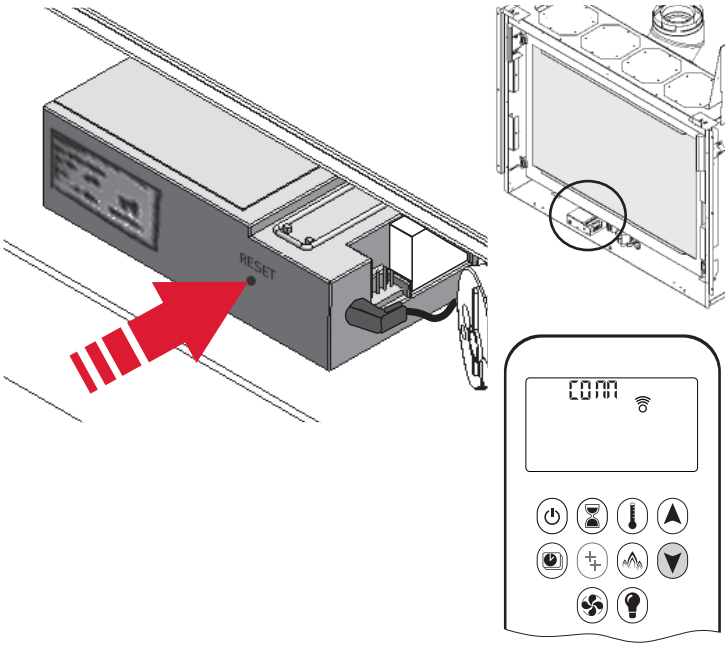

Radio Frequency

918.0 MHz for USA and Canada.

This device complies with Part 15 of the FCC Rules and with Industry Canada license-exempt RSS standard(s). Operation is subject to the following two conditions:

(1) this device may not cause harmful interference, and

(2) this device must accept any interference received, including interference that may cause undesired operation.

Install Remote Control Handset Wall Holder

The remote control kit for this fireplace comes complete with a wall-mounted holder. This holder is not required in all installations but is provided as an optional feature for those customers who wish to mount the remote handset to the wall.

To install the holder to the wall, find a convenient location and use the hardware provided with the kit. Cover the screws with the included caps to finish the mounting.

Once mounted, the holder is magnetic - simply place the remote gently into the holder.

IMPORTANT: The location of the remote control handset is important to assure proper temperature regulation. To obtain a constant temperature, we recommend that the handset should be **between 3 and 15 feet away from the appliance but not directly above it**. We also advise that the handset should be located away from any other heat source and not in direct sunlight as this may affect the temperature sensor located in the remote handset.

Check Operation

Turn the fireplace flame up and down using the remote control to confirm that the full range of inputs is achieved—see Appendix B - Remote Control Operation on pages 75-81 of this manual.

Adjust Aeration (if needed)

Light the fire and allow the unit to warm up for 10–15 minutes to evaluate the flame picture. The burner is equipped with an adjustable shutter to control primary aeration. The shutter is factory-set to an aeration gap which will give optimum performance for the vast majority of installations.

Depending of the fuel bed used, altitude and other considerations, the flame picture may be improved by adjusting the aeration. The need for adjustment should be determined only by operating the appliance with the fuel bed, panels and window installed and evaluating the flame picture after a 15-minute warm-up.

The installer is responsible for verifying aeration setting for ALL installations.

Increasing aeration (air shutter open) will cause the flames to appear more transparent and blue showing more ceramic effects glow.

Decreasing aeration (air shutter close) will cause the flames to appear more yellow or orange showing less ceramic effects glow.

Too little aeration may result in black carbon forming on logs or roof panel and dropping into the firebox. May also result in carbon or soot stains on the vent termination and exterior wall around the termination! The Manufacturer is not responsible for for any damage caused by an air shutter setting with too little aeration.

Operation and Burner Aeration

Air Shutter

The air shutter adjustment lever is located under the firebox. If the trim or front is already installed, remove the barrier screen and the removable panel at the bottom of the fireplace.

To adjust the air shutter:

1. Locate the aeration lever under the firebox.

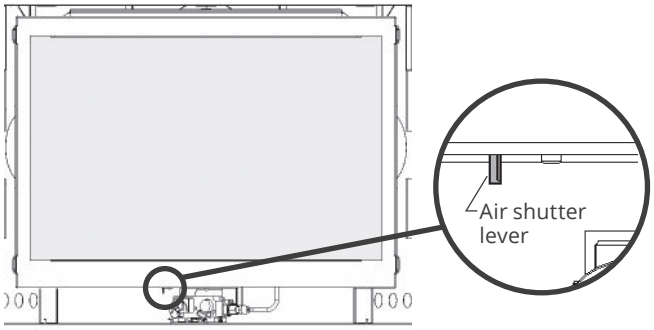

2. Move the lever left or right to the desired position. (parts shown cut away below for clarity)

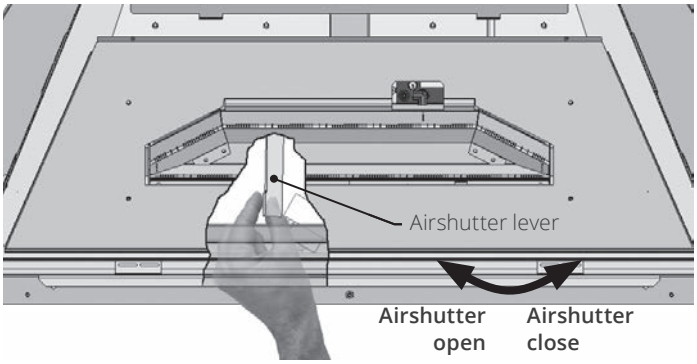

Trim and Barrier Screen

Install Trim and Barrier Screen

Install the trim chosen by the customer for the fireplace. Install as well the barrier screen which is provided with the trim.

Show the customer how to remove the barrier screen to access the controls.

Follow the instructions provided with the trim and leave those instructions behind for the customer's further reference.

Wiring Diagram

GV60

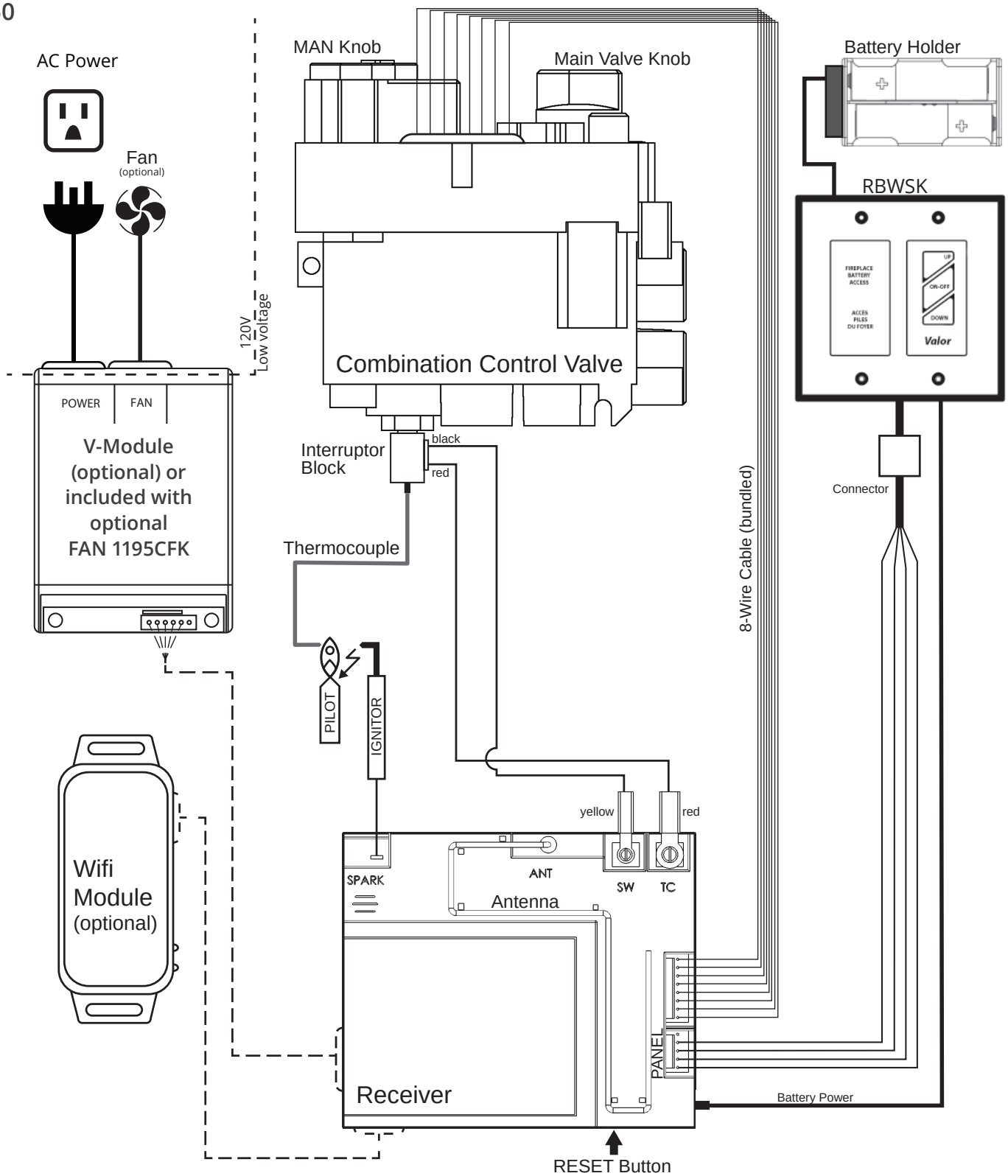

WARNING

NO ELECTRICAL CONNECTION ALLOWED for any outdoor installation!

Commonwealth of Massachusetts

State of Massachusetts Carbon Monoxide Detector/Vent Terminal Signage Requirements

For all side wall horizontally vented gas fueled equipment installed in every dwelling, building or structure used in whole or in part for residential purposes, including those owned or operated by the Commonwealth and where the side wall exhaust vent termination is less than seven (7) feet above finished grade in the area of the venting, including but not limited to decks and porches, the following requirements shall be satisfied:

1. INSTALLATION OF CARBON MONOXIDE DETECTORS. At the time of installation of the side wall horizontal vented gas fueled equipment, the installing plumber or gas fitter shall observe that a hard wired carbon monoxide detector with an alarm and battery back-up is installed on the floor level where the gas equipment is to be installed. In addition, the installing plumber or gas fitter shall observe that a battery operated or hard wired carbon monoxide detector with an alarm is installed on each additional level of the dwelling, building or structure served by the side wall horizontal vented gas fueled equipment. It shall be the responsibility of the property owner to secure the services of qualified licensed professionals for the installation of hard wired carbon monoxide detectors.

a. In the event that the side wall horizontally vented gas fueled equipment is installed in a crawl space or an attic, the hard wired carbon monoxide detector with alarm and battery back-up may be installed on the next adjacent floor level.

b. In the event that the requirements of this subdivision can not be met at the time of completion of installation, the owner shall have a period of thirty (30) days to comply with the above requirements; provided, however, that during said thirty (30) day period, a battery operated carbon monoxide detector with an alarm shall be installed.

2. APPROVED CARBON MONOXIDE DETECTORS. Each carbon monoxide detector as required in accordance with the above provisions shall comply with NFPA 720 and be ANSI/UL 2034 listed and IAS certified.

3. SIGNAGE. A metal or plastic identification plate shall be permanently mounted to the exterior of the building at a minimum height of eight (8) feet above grade directly in line with the exhaust vent terminal for the horizontally vented gas fueled heating appliance or equipment. The sign shall read, in print size no less than one-half (1/2) inch in size, “GAS VENT DIRECTLY BELOW. KEEP CLEAR OF ALL OBSTRUCTIONS”.

4. INSPECTION. The state or local gas inspector of the side wall horizontally vented gas fueled equipment shall not approve the installation unless, upon inspection, the inspector observes carbon monoxide detectors and signage installed in accordance with the provisions of 248 CMR 5.08(2)(a)1 through 4.

(b) EXEMPTIONS: The following equipment is exempt from 248 CMR 5.08(2)(a)1 through 4:

1. The equipment listed in Chapter 10 entitled “Equipment Not Required To Be Vented” in the most current edition of NFPA 54 as adopted by the Board; and

2. Product Approved side wall horizontally vented gas fueled equipment installed in a room or structure separate from the dwelling, building or structure used in whole or in part for residential purposes.

(c) MANUFACTURER REQUIREMENTS - GAS EQUIPMENT VENTING SYSTEM PROVIDED. When the manufacturer of Product Approved side wall horizontally vented gas equipment provides a venting system design or venting system components with the equipment, the instructions provided by the manufacturer for installation of the equipment and the venting system shall include:

1. Detailed instructions for the installation of the venting system design or the venting system components; and

2. A complete parts list for the venting system design or venting system.

(d) MANUFACTURER REQUIREMENTS - GAS EQUIPMENT VENTING SYSTEM NOT PROVIDED. When the manufacturer of a Product Approved side wall horizontally vented gas fueled equipment does not provide the parts for venting the flue gases, but identifies “special venting systems”, the following requirements shall be satisfied by the manufacturer:

1. The referenced “special venting system” instructions shall be included with the appliance or equipment installation instructions; and

2. The “special venting systems” shall be Product Approved by the Board, and the instructions for that system shall include a parts list and detailed installation instructions.

(e) A copy of all installation instructions for all Product Approved side wall horizontally vented gas fueled equipment, all venting instructions, all parts lists for venting instructions, and/or all venting design instructions shall remain with the appliance or equipment at the completion of the installation.

Appendix A - Lighting Instructions Plate

FOR YOUR SAFETY, READ BEFORE LIGHTING

WARNING: If you do not follow these instructions exactly a fire or explosion may result causing property damage, personal injury or loss of life.

A. This appliance has a pilot which must be lighted by hand or by remote control. Follow these instructions exactly. To save gas, turn the pilot off when not using the appliance for a prolonged period of time.

B. BEFORE LIGHTING, smell all around the appliance area for gas. Be sure to smell next to the floor because some gas are heavier than air and will settle on the floor.

WHAT TO DO IF YOU SMELL GAS

- Do not try to light any appliance.
- Do not touch any electric switch; do not use any phone in your building.
- Immediately call your gas supplier from a neighbor's phone. Follow the gas supplier's instructions.
- If you cannot reach your gas supplier, call the fire department.

C. Use only your hand to push in or turn the control knobs. Never use tools. If the knobs will not push in or turn by hand, don't try to repair them; call a qualified service technician. Force or attempted repair may result in a fire or explosion.

D. Do not use this appliance if any part has been under water. Immediately call a qualified service technician to inspect the appliance and to replace any part of the control system and any gas control, which has been under water.

LIGHTING INSTRUCTIONS

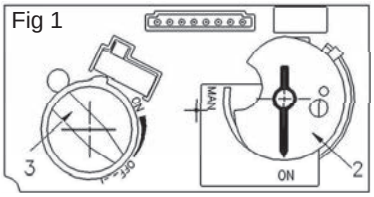

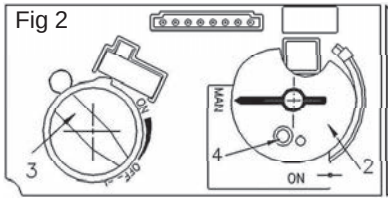

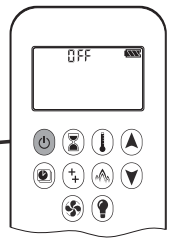

1. STOP! Read the safety information above

2. TO CLEAR ANY GAS, turn main valve off by pressing the button on remote handset (1). Wait five (5) minutes to clear out any gas, then smell for gas, including near the floor. If you smell gas,STOP! follow "B" in the safety information above on this label. If you don't smell gas, go to the next step.

3. AUTOMATIC IGNITION: MAN-knob (2) in ON position. Ensure Flame Adjustment knob (3) is set to lowest setting (Fig. 1). Locate the pilot (Fig. 3.) inside the firebox.

On the remote control handset, press the button; a short acoustic signal confirms the start has begun. Further short acoustic signals indicate the ignition process is in progress When the pilot is lit, the Flame Adjustment knob (3) will automatically rotate to the highest setting. Press the button on the remote control handset to reduce the flame height.

4. MANUAL IGNITION: MAN-knob (2) in MAN position (Fig. 2). With the window off, locate the pilot (Fig. 3) inside the firebox. Set Flame Adjustment knob (3) to the lowest setting. Push down the metallic core (4) with a pen or similar instrument; this will establish the pilot gas flow. Light gas at the pilot (5) with a match. Continue holding down metal core (4) for about 10 seconds; after release, pilot should remain lit. If the pilot will not stay lit after several tries, turn the gas control knob (3) to OFF and call your local service technician or gas supplier. Reinstall the window and set the MAN-knob (2) to ON; turn Flame Adjustment knob (3) up or down manually or use the and buttons on the remote control handset to adjust the flame height.

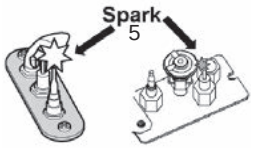

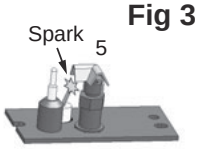

Fig 3

TO TURN OFF GAS TO APPLIANCE

AUTOMATIC SHUT-OFF (using the remote control handset):

Press and hold the button on the remote control handset to shut-off the main burner gas flow.

Press the button on remote handset to shut-off the appliance, including pilot flame.

Appendix B - Remote Control Operation

Initial Pairing

Before the remote control can be used with the fireplace, it must be paired. See Remote Control Set-Up on page 69.

Main Display and Remote Handset

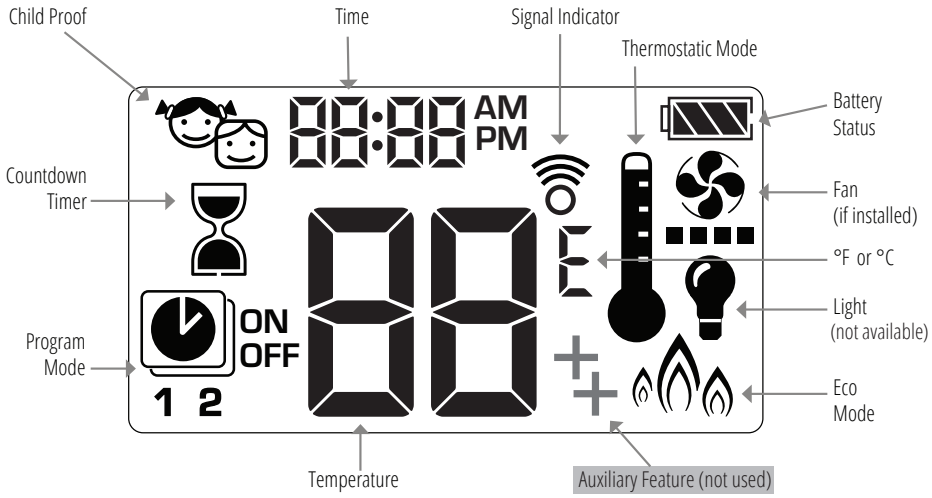

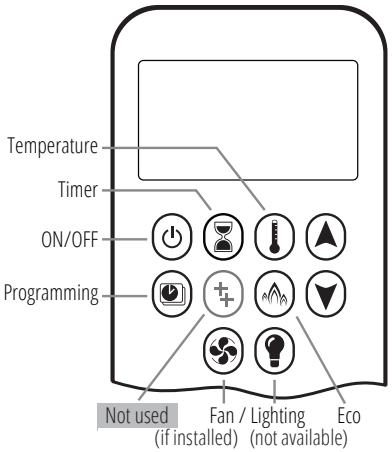

To Turn On Fire

NOTE: When pilot ignition is confirmed, motor automatically turns to maximum flame height.

One-Button lighting (default): ⏻
Two-Button lighting: ⏻ + ▲ simultaneously

Press and hold for 4 seconds, until 8 short beeps and a blinking series of lines confirms the start sequence has begun. Release button.

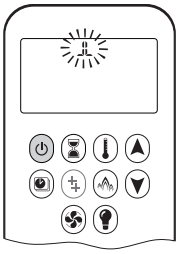

Main gas flows once pilot ignition is confirmed.

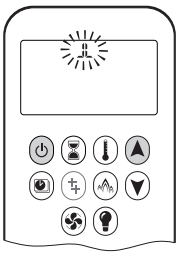

Handset automatically goes into manual mode after main burner ignition.

Standby Mode (Pilot Flame)

Press and hold ▼ to set appliance to pilot flame.

CAUTION: If the pilot does not stay lit after several tries call your local service technician or gas supplier.

To Turn Off Fire

Press ⏻ to turn OFF.

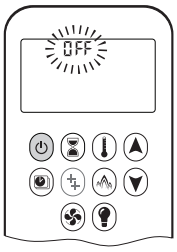

Note: There is a 2 minute delay after switching off before the next ignition is possible.

CAUTION: Always check the fire and pilot visually to ensure they are off.

Flame Height Adjustment

To increase flame height, press and hold ▲.

To decrease flame height, press and hold ▼. You may hold the button down until the fire is set to pilot flame only.

Appendix B - Remote Control Operation

Designated Low Fire and High Fire

To go to low fire, double-click ▼. "LO" is displayed.

Note: Flame goes to high fire first before going to low fire.

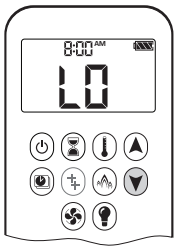

To go to high fire, double-click ▲. "HI" is displayed.

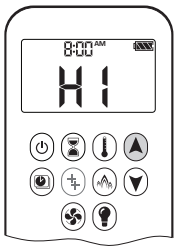

Choosing 1-Button or 2-Button Ignition

On the remote control handset, you can choose a 1-button or 2-button ignition. You can also choose to activate or deactivate some of the functions. By default, the handset is set to a 1-button ignition.

To change from 1-button to 2-button ignition, remove the batteries, wait 10 seconds, reinsert batteries, and immediately when the display flashes, press and hold the ⏻ button for 10 seconds. **ON** is displayed and **1** is flashing. When change is complete, **1** changes to **2**.

To change from 2-button to 1-button ignition, proceed the same as above. **ON** is displayed and **2** is flashing. When change is complete, **2** changes to **1**.

Deactivating or Activating Functions

These functions are active by default, but can be deactivated at any time:

- Child Proof
- Program Mode
- Thermostatic Mode
- Eco Mode
- Circulating Fan Operation
- Countdown Timer

NOTE: The function Auxiliary Feature is not used.

To deactivate functions:

1. Install batteries. All icons are displayed and flashing.
2. While the icons are flashing, press the relevant function button and hold for 10 seconds.
3. The function icon will flash until deactivation is complete. Deactivation is complete when the function icon and two horizontal bars (▬ ▬) are displayed.

Note: If a deactivated button is pressed, there is no function, and the two horizontal bars are displayed.

To activate functions:

1. Install batteries. All icons are displayed and flashing.
2. While the icons are flashing, press the relevant function button and hold for 10 seconds.
3. The function icon will continue to flash until activation is complete, and then turn solid. Activation is complete when the function icon is displayed.

Setting Celsius or Fahrenheit

To change between °C and °F, press and hold ⏻ + ⌛ simultaneously.

Note : °C = 24-hour clock
°F = 12-hour clock

Setting the Time

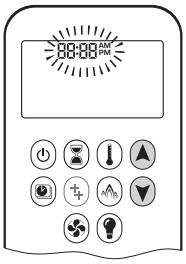

1. Press ▲ + ▼ simultaneously. **Day** flashes.
2. Press ▲ + ▼ to select a number to correspond with the day of the week.
   - 1 = Monday
   - 2 = Tuesday
   - 3 = Wednesday
   - 4 = Thursday
   - 5 = Friday
   - 6 = Saturday
   - 7= Sunday
3. Press ▲ + ▼ simultaneously. **Hour** flashes.
4. To select hour press ▲ or ▼.
5. Press ▲ + ▼ simultaneously. **Minutes** flash.
6. To select minutes press ▲ or ▼.
7. To confirm, press ▲ + ▼ simultaneously or wait.

Appendix B - Remote Control Operation

Child Proof

Your handset can be set to lock out all commands to the fireplace, except OFF.

To turn Child Proof ON:

1. Press and hold ⏻ + ▼ simultaneously.
2. is displayed. Child Proof is now active.

To turn Child Proof OFF:

1. Press and hold ⏻ + ▼ simultaneously.
2. disappears. Child Proof is now inactive, and the handset has full function.

Countdown Timer

You can set your fireplace to automatically turn off at the end of a timer.

To set a Countdown Timer:

1. Press and hold ⌛ until ⌛ is displayed. **Hour** flashes.
2. Press ▲ or ▼ to select Hour.
3. To confirm, press ⌛. **Minutes** flash.
4. Press ▲ or ▼ to select Minutes.
5. To confirm, press ⌛ or wait.

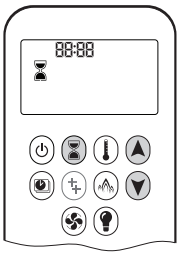

To turn off a Countdown Timer:

1. Press ⌛, and the ⌛ countdown disappears.

Note: The Countdown Timer only works in Manual, Thermostatic, and Eco modes. Maximum countdown time is 9 hours and 50 minutes.

Light/Dimmer Operation (not available)

Circulating Fan Operation (if installed)

Setting:

1. Press and hold ✇ until ✇ flashes.
2. Press ▲ to increase or ▼ to decrease fan speed.
3. To confirm setting, either press ✇ or wait. ✇ is displayed.

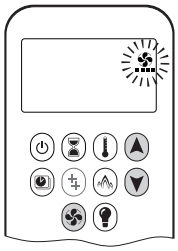

Off:

Press ▼ until all 4 speed level bars disappear.

Note: When setting, if the fan was not switched off after last use, it starts automatically 4 minutes after ignition at maximum speed, and goes to the last set level after 10 seconds. The fan stops 10 minutes after the gas is OFF or at pilot.

Appendix B - Remote Control Operation

Modes of Operation

Thermostatic Mode

The room temperature is measured and compared to the set temperature. The flame height is automatically adjusted to achieve the set temperature.

Program Mode

The temperature is controlled by Programs 1 and 2, each of which can be set to go on and off at specific times, at a set temperature.

Eco Mode

Flame height modulates between high and low. If the room temperature is lower than the set temperature, the flame height stays on high for a longer period of time. If the room temperature is higher than the set temperature, the flame height stays on low for a longer period of time. One cycle lasts approximately 20 minutes.

If any of the above modes (Thermostatic, Program, or Eco) are engaged by the MyFire app over WiFi, the handset will display **APP**.

Manual Mode

The on/off status of the fireplace, as well as flame height, are manually controlled by the user.

Thermostatic Mode

On:

Press . is displayed. Preset temperature displays briefly, followed by the room temperature.

Setting Desired Temperature:

1. Press and hold until is displayed and set temperature flashes.
2. To adjust set temperature, press or .
3. To confirm, press or wait.

Off:

1. Press .
2. Press or to go to Manual Mode.
3. Press to go to Program Mode.
4. Press to go to Eco Mode.

Program Mode

On:

Press .
, **1** or **2**, **ON** or **OFF** are displayed.

Off:

1. Press , , or to go to Manual Mode.
2. Press to go to Thermostatic Mode.
3. Press to go to Eco Mode.

Note: The set temperature for Thermostatic Mode is the temperature for the ON time in Program Mode. Changing the Thermostatic Mode set temperature also changes the ON time temperature in Program Mode.

Default Settings:

- ON TIME (Thermostatic) TEMPERATURE: 70°F / 21°C
- OFF TIME TEMPERATURE: "– –" (pilot flame only)

Appendix B - Remote Control Operation

Temperature Setting:

1. Press and hold until flashes. **ON** and set temperature (set in Thermostatic Mode) is displayed.
2. To continue, press or wait. , **OFF** displayed, temperature flashes.
3. Select off temperature by pressing or .
4. To confirm, press .

Note: The on (Thermostatic) and off set temperatures are the same for each day.

Day Setting:

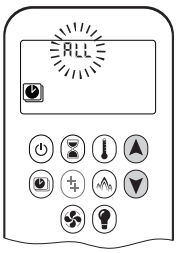

1. **ALL** flashes. Press or to choose between:
   - **ALL** = same settings ON-OFF every day
   - **SA:SU** = same settings ON-OFF Saturday and Sunday
   - **1, 2, 3, 4, 5, 6, 7** = daily timer—unique ON-OFF settings for a single day of the week, for multiple days of the week or for every day of the week.
2. To confirm, press .

ALL Selected (same settings every day)

On Time Setting (PROGRAM 1)

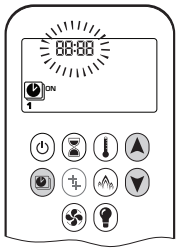

1. , **1, ON** are displayed. **ALL** is displayed briefly. Hour flashes.
2. To select hour, press or .
3. To confirm, press . , **1, ON** are displayed. **ALL** displayed briefly. Minutes flash.
4. To select minutes, press or .
5. To confirm, press .

Off Time Setting (PROGRAM 1)

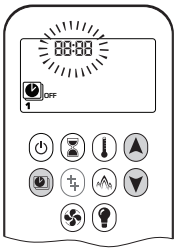

1. , **1, OFF** are displayed. **ALL** is displayed briefly. Hour flashes.
2. To select hour, press or .
3. To confirm, press . , **1, OFF** are displayed. **ALL** displayed briefly. Minutes flash.
4. To select minutes, press or .
5. To confirm, press .

Note: Either continue to PROGRAM 2 and set ON and OFF times or stop programming at this point, and PROGRAM 2 remains deactivated.

Note: PROGRAM 1 and 2 use the same ON (Thermostatic) and OFF temperatures. Once a new ON (Thermostatic) and/or OFF temperature has been set, that temperature becomes the new default setting.
Note: ON and OFF times programmed for PROGRAM 1 and PROGRAM 2 become the new default times.

The batteries must be removed to clear the PROGRAM 1 and PROGRAM 2 ON and OFF times and temperatures.

SA:SU (same settings Saturday and Sunday) or 1, 2, 3, 4, 5, 6, 7 (different settings on different days)

- Set on time and off time using the same procedure as "ALL Selected" above.
- Waiting to finish setting.

Eco Mode

On:

Press button to enter Eco Mode. is displayed.

Flame height modulates between high and low every 20 minutes.

Off:

Press button to exit Eco Mode. disappears.

Appendix B - Remote Control Operation

Low Battery Indication

⚠ **CAUTION:** Do not use a screwdriver or other metallic object to remove the batteries from the battery holder or the handset. This could cause a short circuit.

Handset

The battery icon will show when the battery needs to be replaced. Replace with two 1.5 V AAA alkaline batteries.

Receiver

Frequent beeps for 3 seconds when the motor turns indicate the batteries in the battery holder need to be replaced. Replace with four 1.5 V AA alkaline batteries.

Automatic Shut Off

Countdown Timer

At the end of countdown time period, the fire turns off. The Countdown Timer only works in Manual, Thermostatic, and Eco Modes. Maximum countdown time is 9 hours and 50 minutes.

Low Battery Receiver

With low battery power in the battery holder, the system shuts off the fire completely. (This will not happen if the power is completely interrupted.)

Seven Day Shut Off

The system shuts off the fire completely if there is no change in flame height for 7 days.

Automatic Turn Down

3 Hour No Communication Function

The valve will turn to pilot flame if there is no communication between the handset and receiver for a 3-hour period. The fire will continue to function normally when communication is restored.

Appendix B - Remote Control Operation

Error Codes

In the event of an error condition with the handset or fireplace, the handset will display an error code.

Failure Code	Message on Handset	Duration of Display	Symptom	Possible Cause
F04	F04	4 sec	• No pilot flame within 30 sec • **Note:** after 3 failed ignition sequences, F06 shown	• No gas supply • Air in pilot supply line • No spark • Reversed polarity in thermocouple wiring
F06	F06	4 sec	• 3 failed ignition sequences in 5 minutes • Fire is not responding, no pilot flame	• No gas supply • Air in pilot supply line • No spark • Reversed polarity in thermocouple wiring • Incorrect pilot orifice if valve has been converted from LPG to NG or vice versa
F07	Low battery symbol	Permanent	• Battery icon flashes on handset display	• Low battery in handset
F09	F09	4 sec	• Fire is not responding • No electronic control of fire	• Down arrow button was not pressed during pairing • Receiver and handset are not synced
F46	F46	4 sec	• Fire is not responding • Intermittent response • No electronic control of fire	• No or bad connection between receiver and handset • No power at receiver (batteries low) • Low communication range (mains adapter faulty, handset not communicating with receiver)

Appendix C - Wall Switch Operation

The Wall Switch can be used to control your fireplace. You can turn the pilot on or off and you can increase or decrease the flame height.

Note that the thermostat and programming functions are not available with the wall switch.

Adjusting Flame Height

Press and hold large flame button to gradually increase flame height.

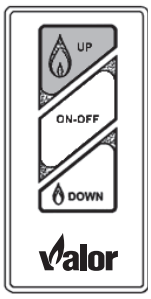

Turning Appliance ON and OFF

Press ON-OFF button once to light pilot. Press again to shut off pilot.

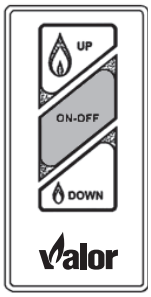

Press and hold small flame button to gradually decrease flame height.

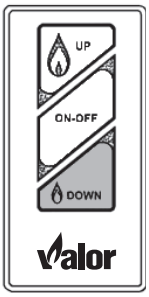

Appendix D - HeatShift System

HeatShift™ System

Planning Installation: H5–H6 with HeatShift®

Instructions for use with following **Valor Heater Models: 1100M, 1400K and 1400M**

Application

HeatShift™ System™ redistributes the warm air flow away from the fireplace opening to a more desirable location using natural convection without use of a fan.

Plenums LKD1, LDK3, LDK4, LDK9: the warm air flow is relocated to a position higher up the wall, out the sidewalls, or even to an adjacent room.
Termination Plates LDK7: the warm air flow is discharged through a gap (min. 2-1/2") between the wall above the fireplace and the ceiling. **LDK7's discharge opening must be located in the same room as the fireplace.**
The result is much cooler wall temperatures above the fireplace opening for locating televisions, artwork, etc.

The 1195CFK and 1495CFK Circulating Fan Kits are not recommended when installing the HeatShift System.

Any kit, LDK1, LDK3, LDK4, LDK7, LDK9 may be used with any of the model fireplaces H5 or H6 listed above.

As a further option, the warm airflow may be extracted away from the duct kit plenum **(LDK1 and LDK4 ONLY)** by connecting a 1270RBK HeatSplit Remote Blower Kit to the duct kit plenum.

HeatShift is compatible with the listed fireplaces only. Earlier version fireplaces will not accept HeatShift.

Note: These instructions are to be used in conjunction with the fireplace's installation instructions.

⚠ WARNING

When placing discharge close to ceilings, staining or streaking may occur on light colored ceilings due to any dust, etc. in air flow; placing plenum(s) lower on the wall will help reduce the possibility of staining or streaking.

The use of HeatShift will permit lower mantel clearances to be used—see *Combustible Mantel Clearances* in this manual. These lower mantel clearances **must ONLY be used when HeatShift system is installed and the internal convection baffle has been removed**.

Approvals

The LDK1, LDK3, LDK4, LDK7 and LDK9 duct kits are CSA approved for use only with Valor Series fireplaces listed above—DO NOT use with any other models.

HeatShift system may also be used to reduce wall surface temperatures on approved outdoor installations.

5-inch diameter ducts used with this kit must be metal and meet requirements of UL-181 Class 1 Air Duct. Flexible aluminum duct is acceptable provided it meets the UL-181 Class 1 requirements.

⚠ WARNING

All fireplaces listed above require the removal of the internal convection baffle for this system to function properly—read instructions carefully!

⚠ WARNING

DO NOT cover or place objects in front of or on top of air outlet(s). AVOID locating outlet within 7 feet above floor level as discharge temperatures are hot!

NOTE—Sprinklers

Depending on room temperature, HeatShift air discharge temperatures can be in the range of 210 °F (99 °C). Please refer to local building code, choose appropriate sprinkler heads and place them accordingly.
See Framing and Clearances pages.

Appendix D - HeatShift System

Kits

There are 5 kits to choose from:

- LDK1—48″ Plenum
- LDK3—14″ Plenums (2), includes grilles
- LDK4—38″ Plenum
- LDK7—Duct Termination Plates (2)—for wall valance discharge ONLY
- LDK9—30″ Plenum

Kits Contents

LDK1
48″ x 2″

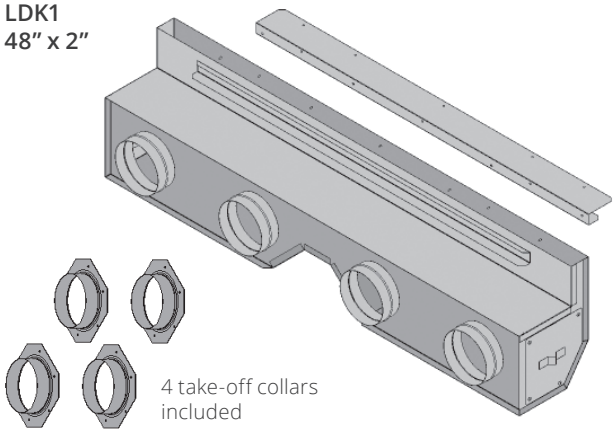

LDK4
38″ x 2″

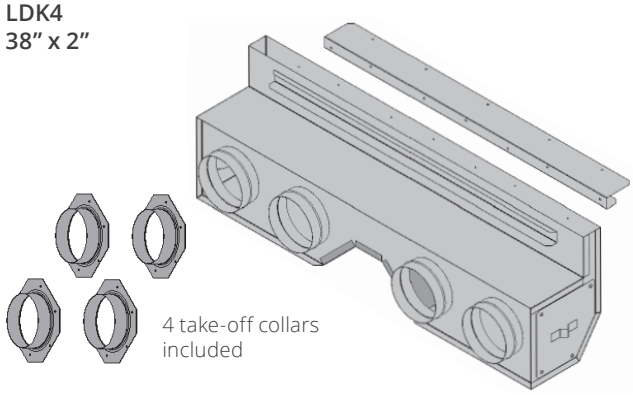

LDK3
2 - 14″ x 6″

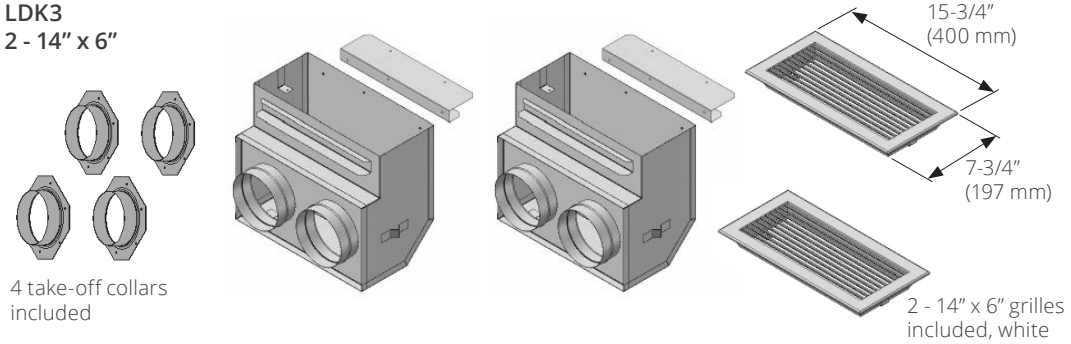

LDK7
2 Duct termination plates

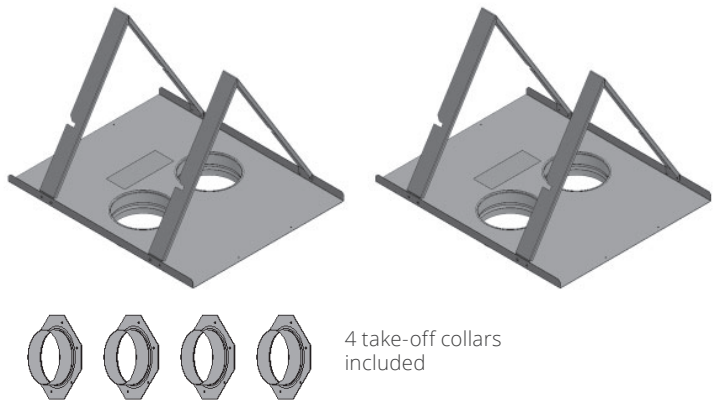

LDK9
30″ x 2″

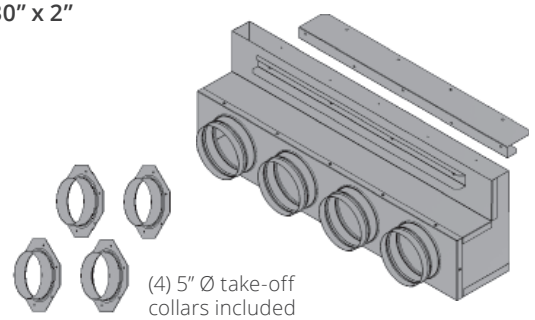

Appendix D - HeatShift System

Optional accessories

- LDK2—48” Finishing Frame, to use with LDK1
- LDK5—38” Finishing Frame, to use with LDK4
- LDK6— 5” dia Aluminum 2-ply Flex Kit—
  2 x 10’–0” lengths, may be cut to required length
- LDK10—30” Finishing Frame, to use with LDK9

Kits Contents

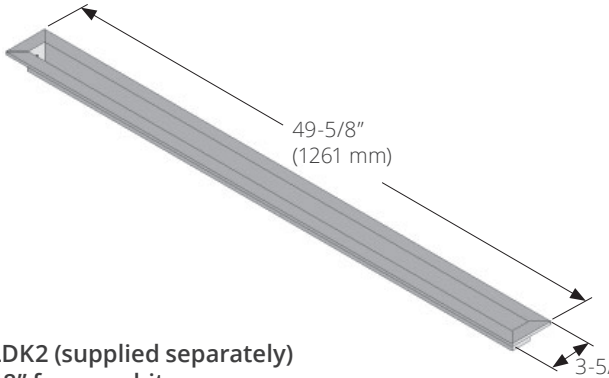

LDK2 (supplied separately)
48” frame, white

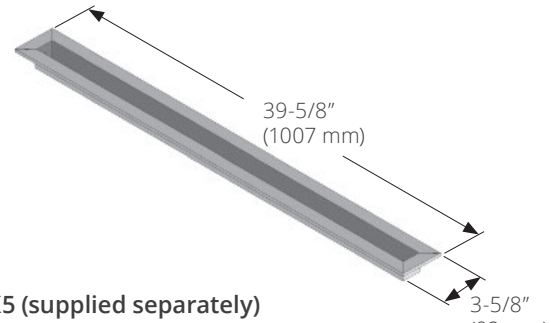

LDK5 (supplied separately)
38” frame, white

LDK6
2 - 10’ x 5” (aluminum flex)

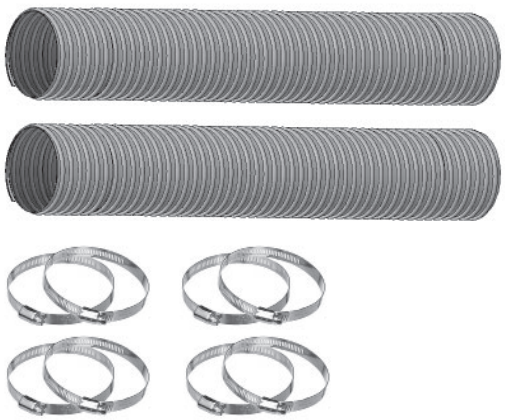

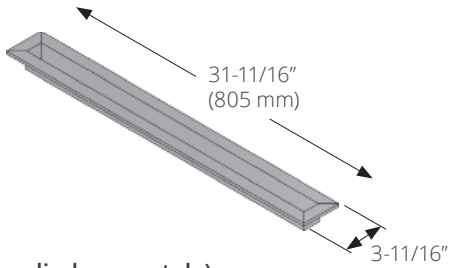

LDK10 (supplied separately)
30” frame, white

Appendix D - HeatShift System

Suggested Configurations

Not to scale

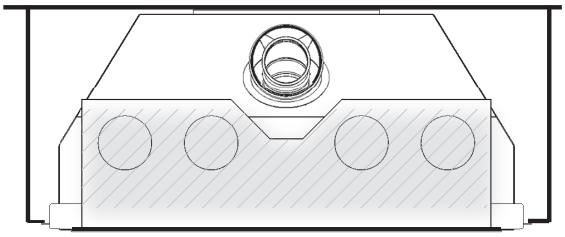

Front wall outlet using LDK1, LDK4 or LDK9

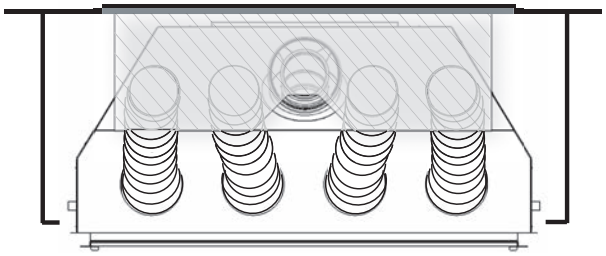

Rear wall outlet using LDK1, LDK4 or LDK9
Note: Fireplace vent may conflict with plenum.
Offset vent around plenum.

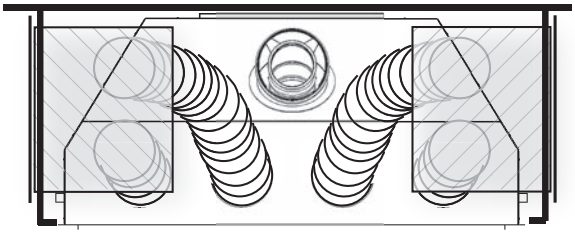

Side wall outlets using LDK3

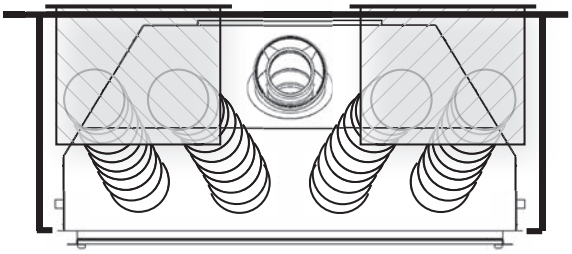

Rear wall outlets using LDK3

Note - When using LDK7, the discharge opening must be located in the same room as the fireplace

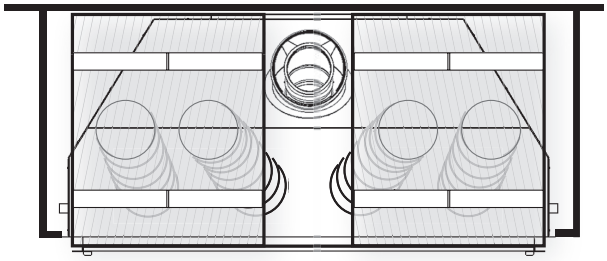

With LDK7

Corner installations

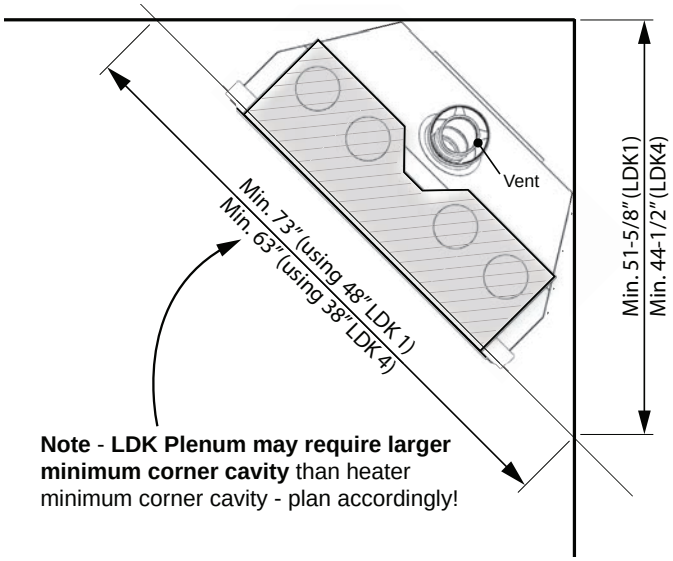

Note - LDK Plenum may require larger minimum corner cavity than heater minimum corner cavity - plan accordingly!

⚠ WARNING

The plenum duct kits are approved for horizontal discharge ONLY. The termination duct plates are approved for vertical upward discharge ONLY. DO NOT install plenum or termination plates in floor or ceiling. DO NOT COVER OR PLACE objects in front of or on top of air outlet(s). AVOID locating outlet within 7 feet of the floor level as discharge air temperatures are hot!

DO NOT DISCHARGE THROUGH EXTERIOR WALLS!

NOTE

This duct kit may also be used for outdoor installations where reduced wall surface temperatures above the unit are desired. The discharge grilles must be located under the weatherproof enclosure described in the GV60CKO Outdoor Fireplace Conversion Kit instructions.

Appendix D - HeatShift System

Overview (applies to LKD1, LDK3, LDK4 and LDK9 kits)

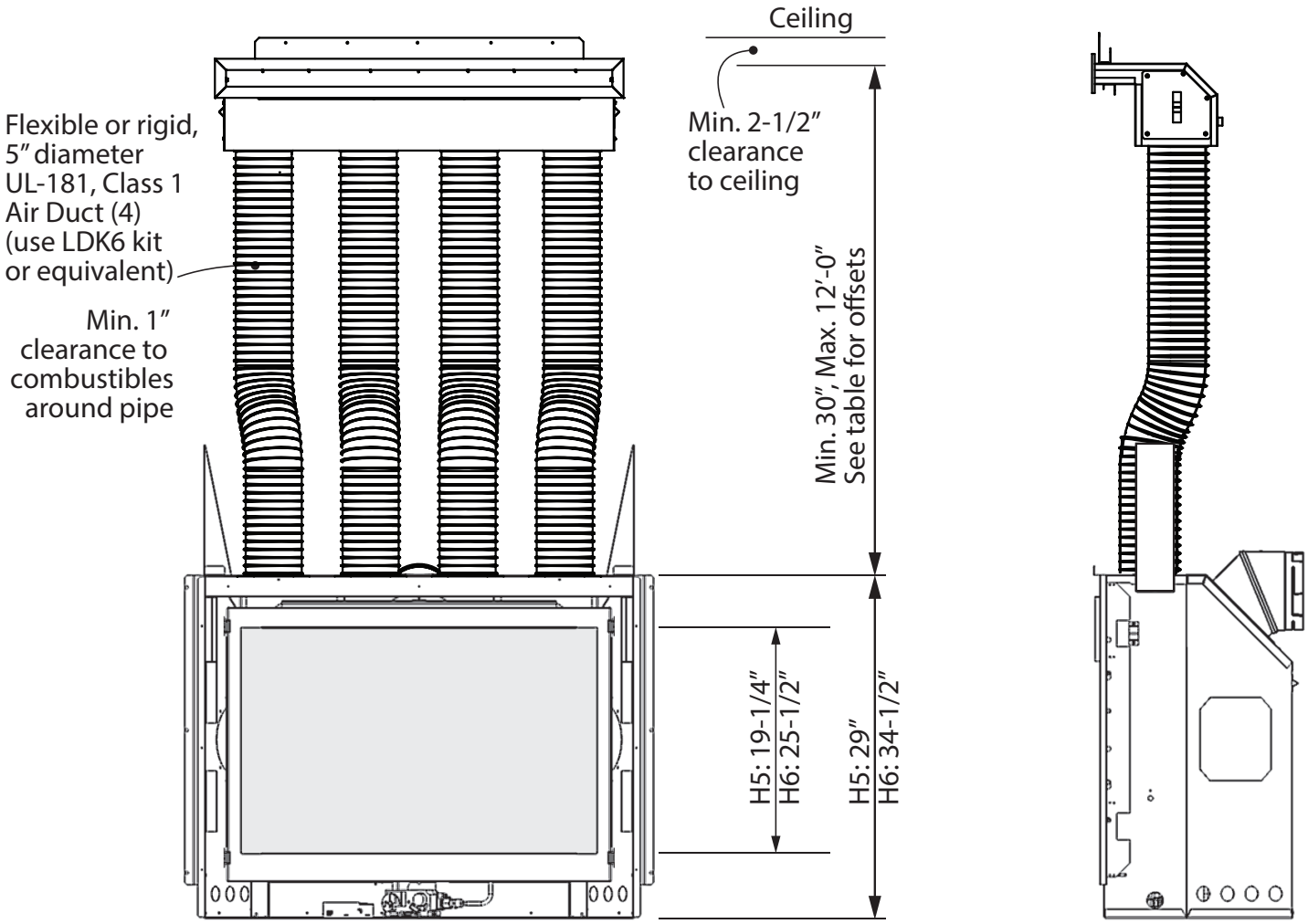

Appendix D - HeatShift System

Overview (applies to LDK7)

NOTE Discharge opening must be located in the same room as fireplace when using LDK7.

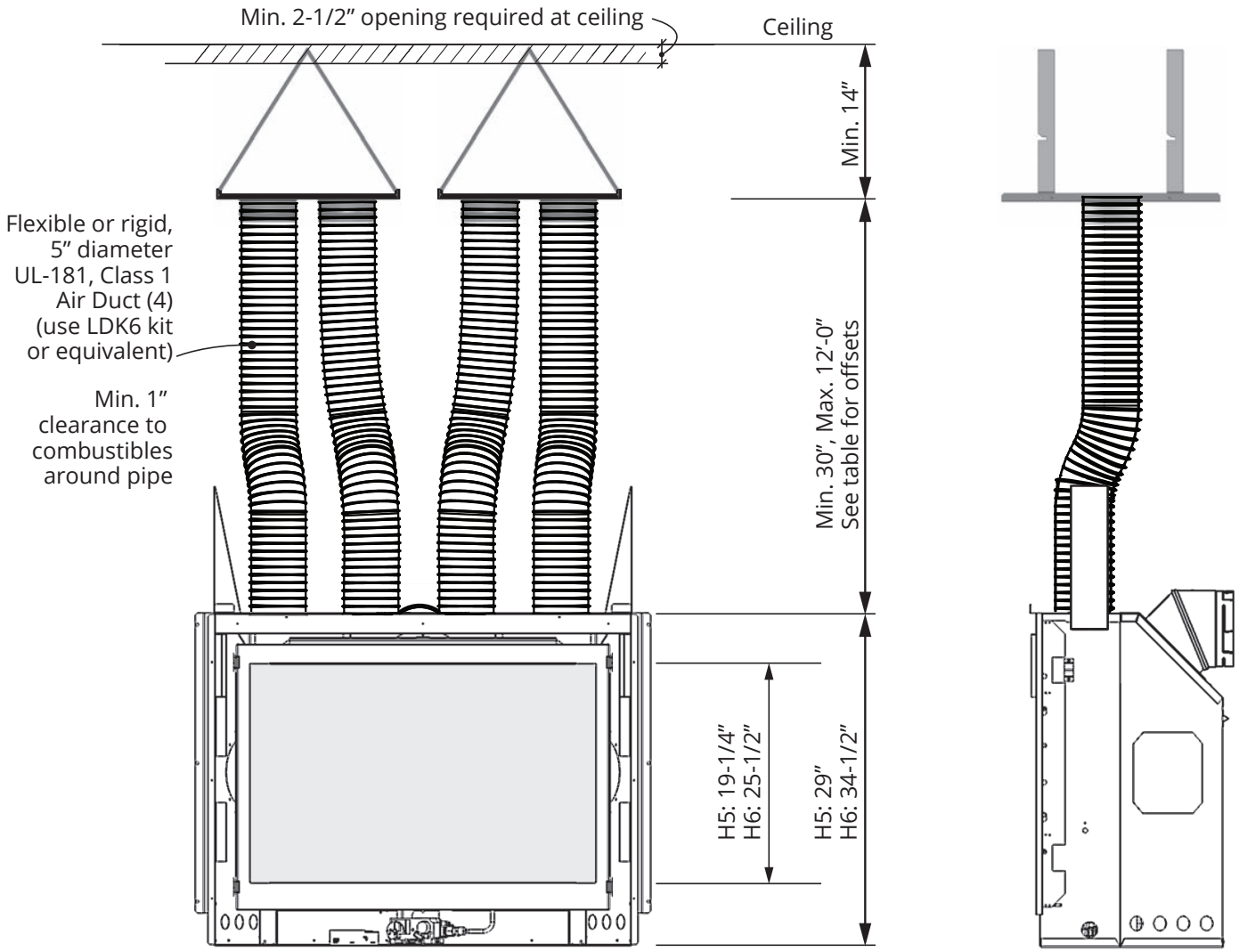

Appendix D - HeatShift System

Y Vertical Rise	X Max. Allowable Horizontal Offset
30″	24″
36″	36″
42″	48″
48″	60″
54″	72″
60″	84″
66″	96″
12′-0″	96″ Max.

With Plenum

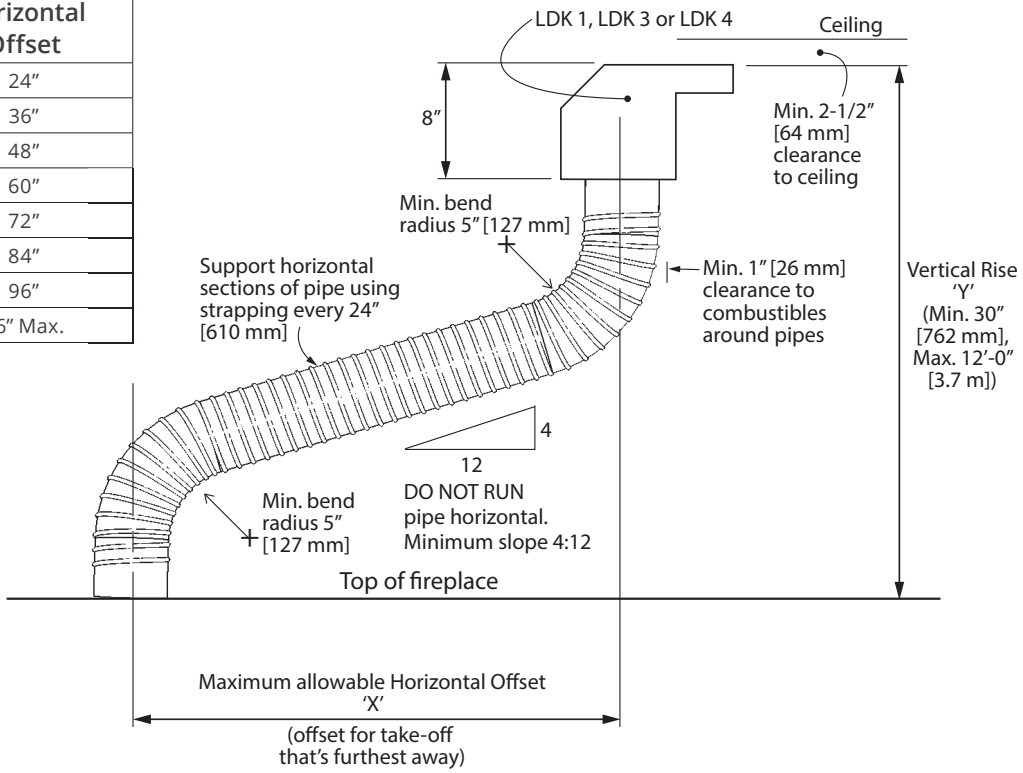

With Plates

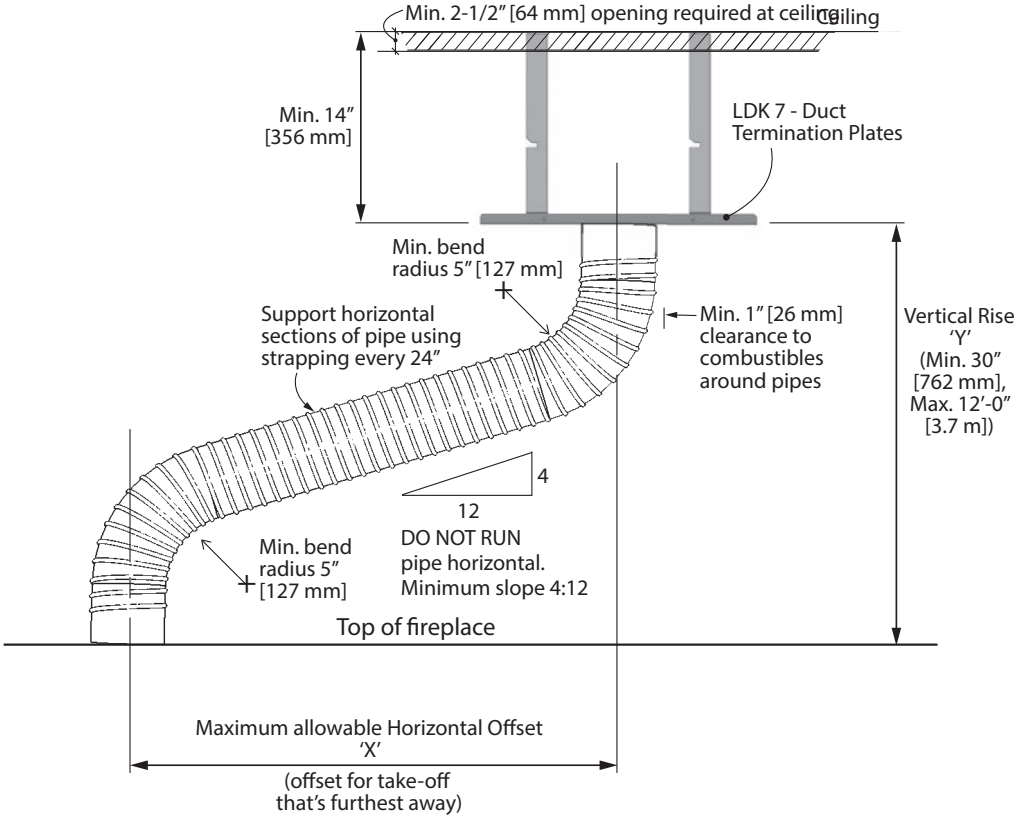

Appendix D - HeatShift System

Plenum Dimensions

LDK 1

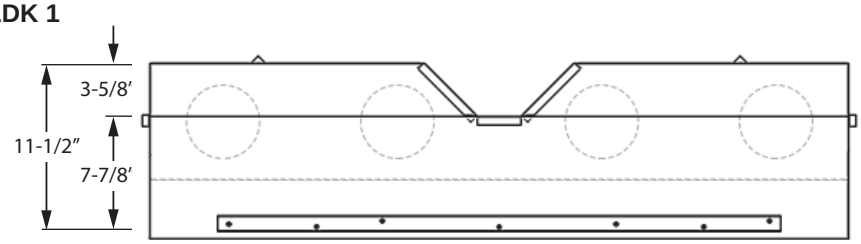

Top View

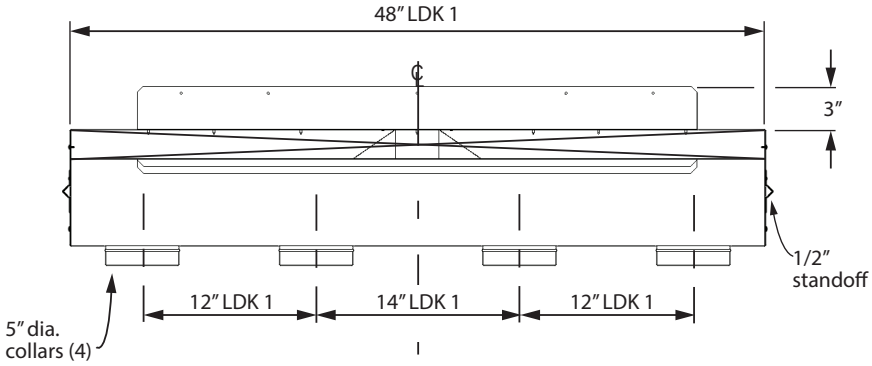

Front View

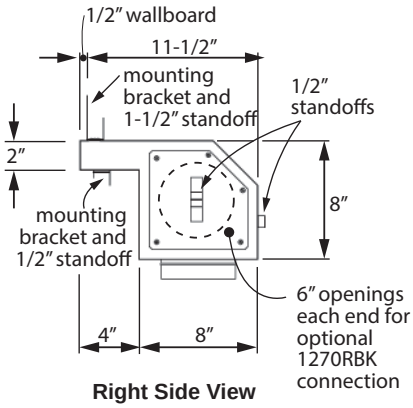

Right Side View

LDK 4

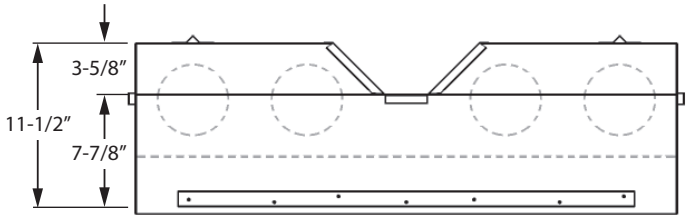

Top View

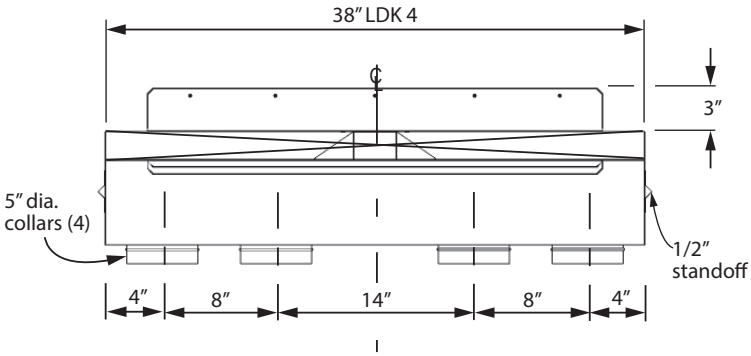

Front View

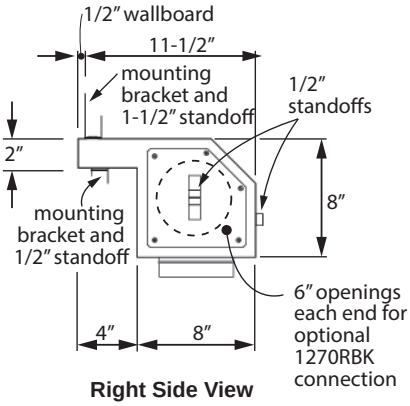

Right Side View

Appendix D - HeatShift System

Plenum Dimensions (cont'd)

LDK 3

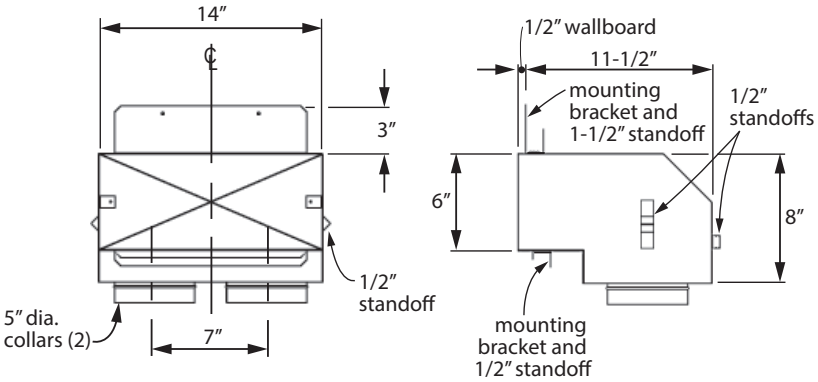

Front View **Right Side View**

LDK 9

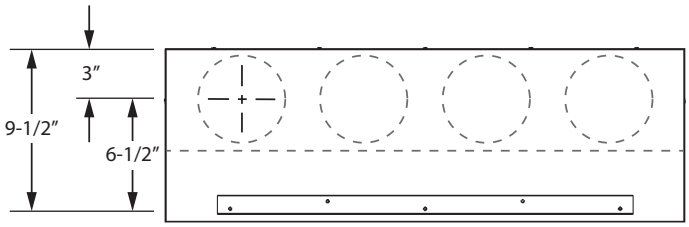

Top View

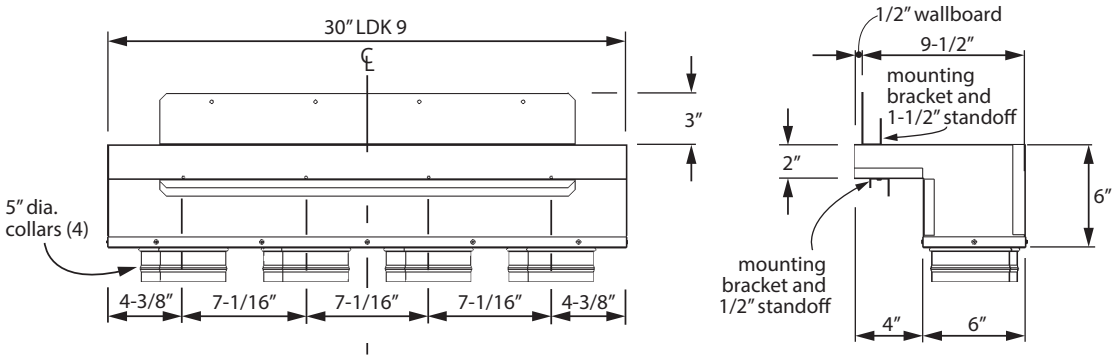

Front View **Right Side View**

Appendix D - HeatShift System

LDK7 Plates Dimensions

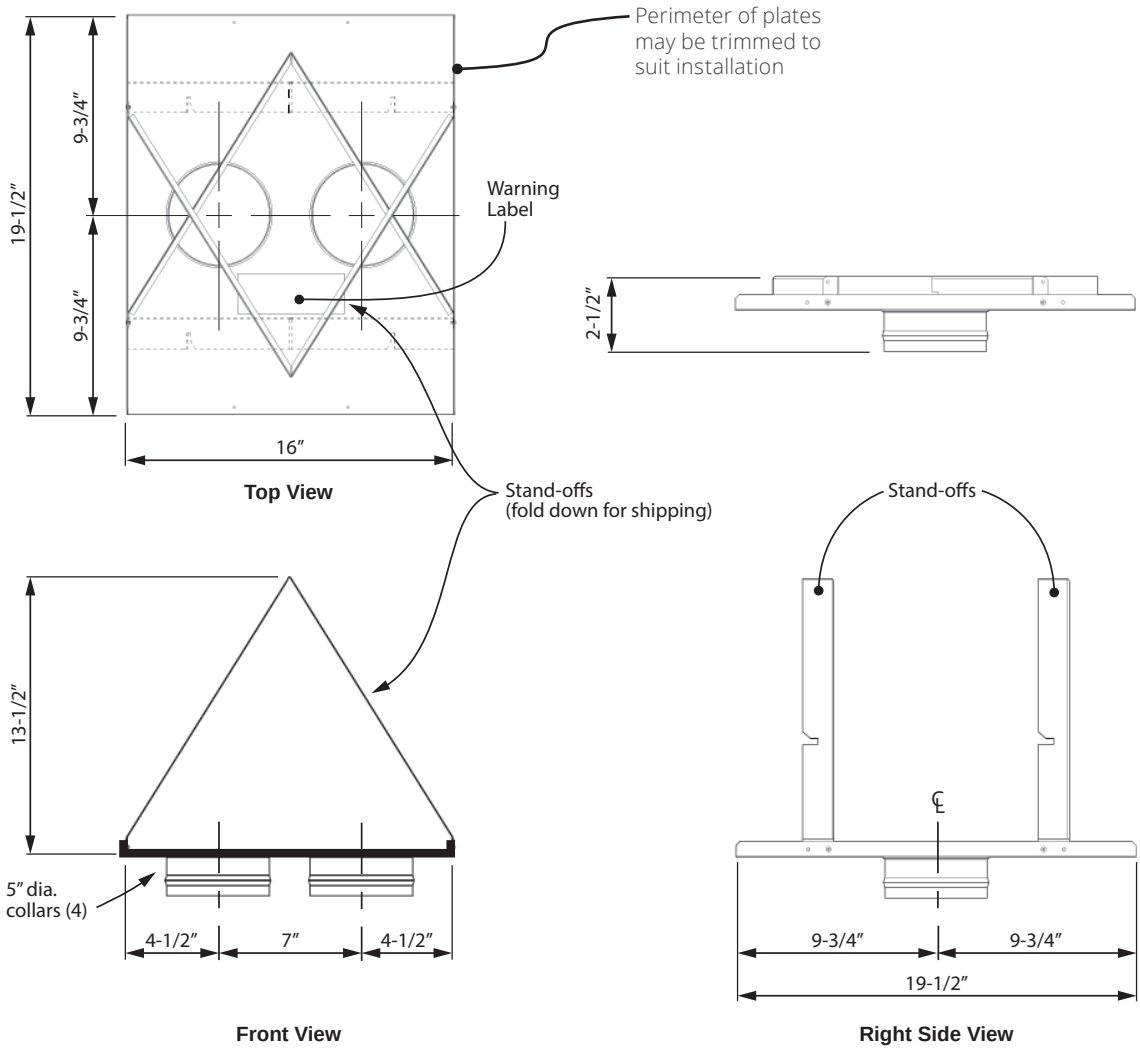

Appendix D - HeatShift System

Rough Frame Openings

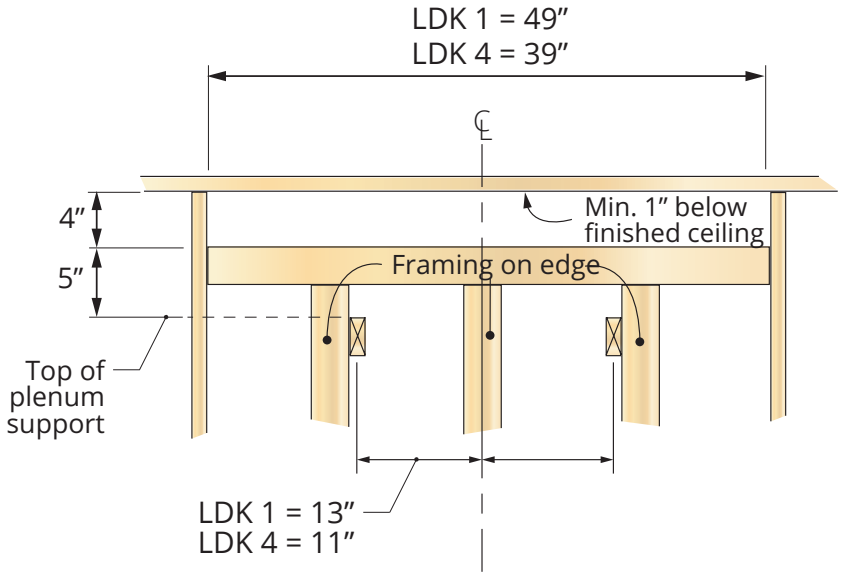

LDK 1 & LDK 4

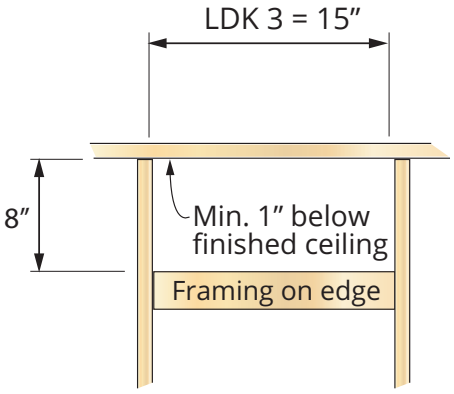

LDK 3

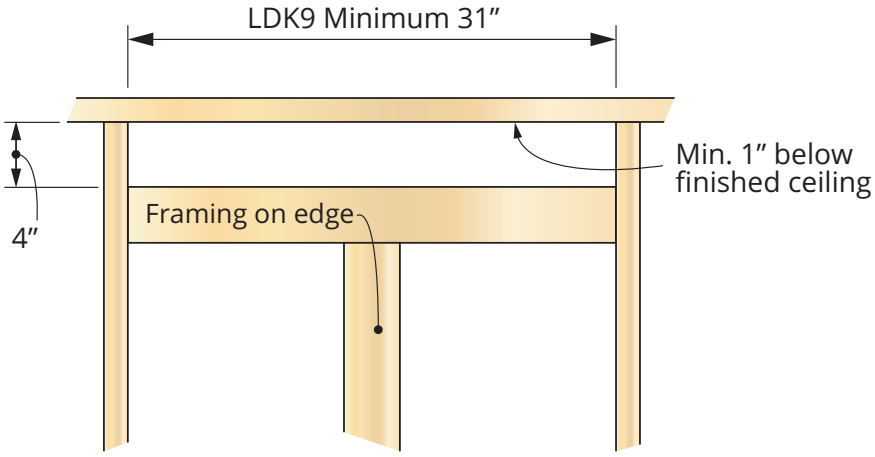

LDK 9

Appendix D - HeatShift System

Framing and Clearances—Plenums, front view

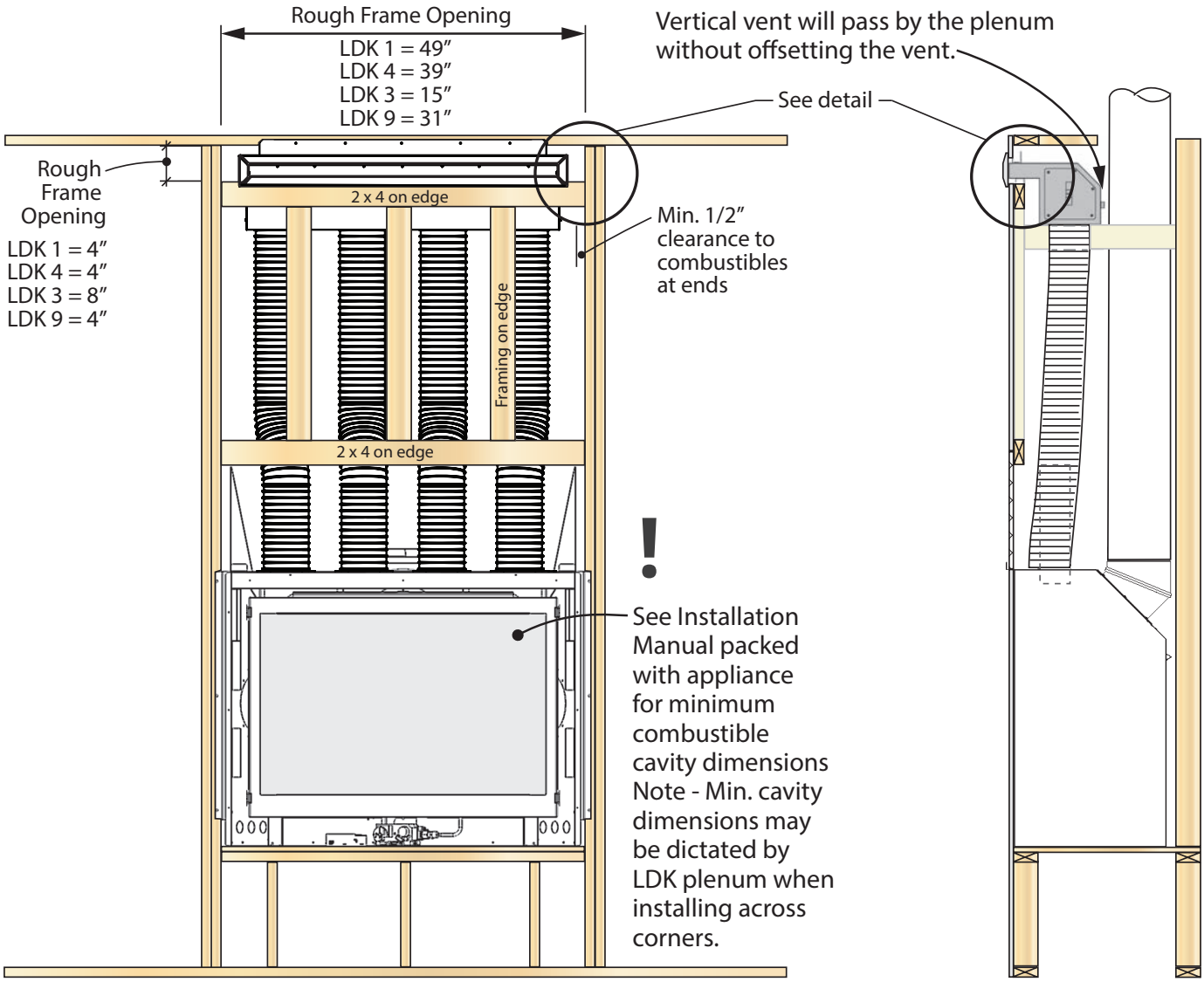

NOTE—Sprinklers

Depending on room temperature, HeatShift air discharge temperatures can be in the range of 210 °F (99 °C). Please refer to local building code, choose appropriate sprinkler heads and place them accordingly.

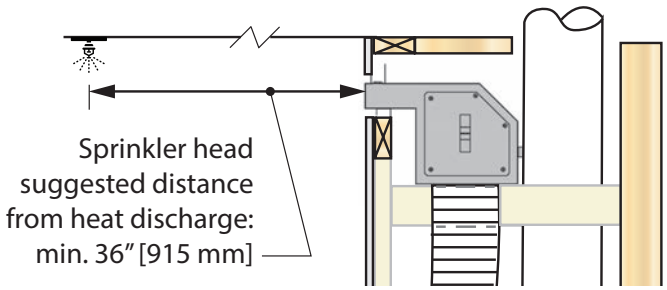

Appendix D - HeatShift System

Framing and Clearances—Plenums, side view

LDK 1 & 4

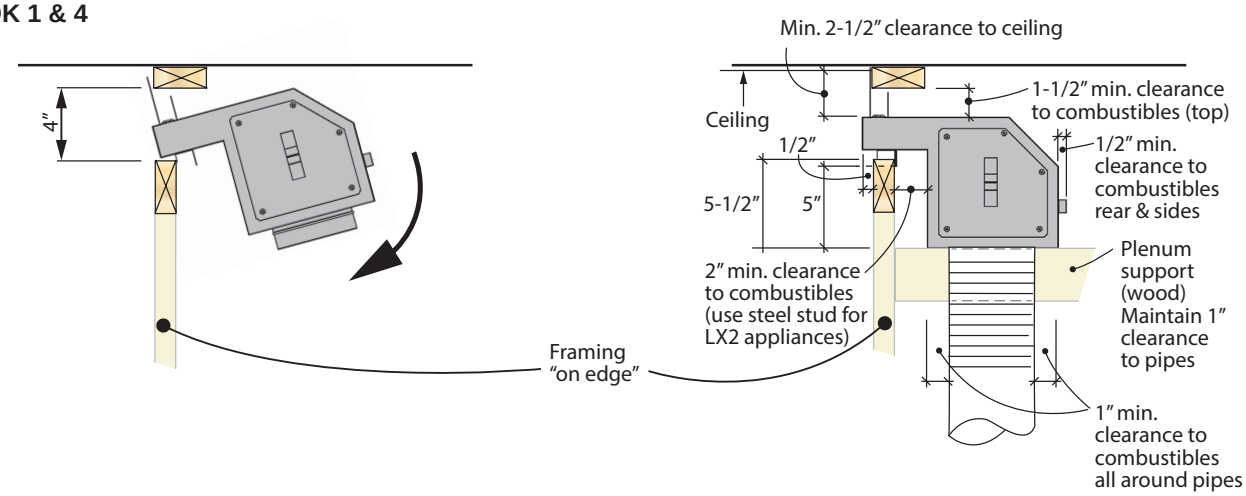

LDK 3

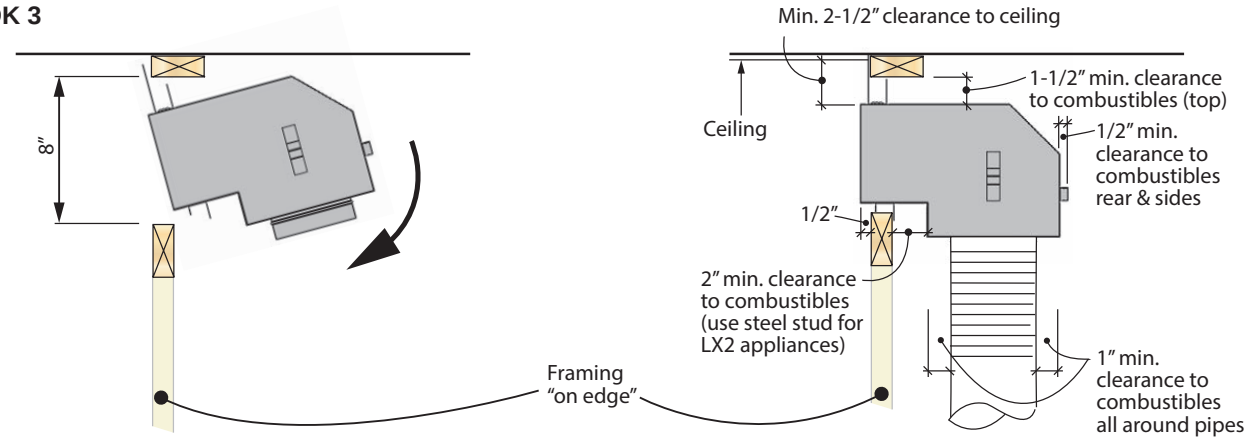

LDK9

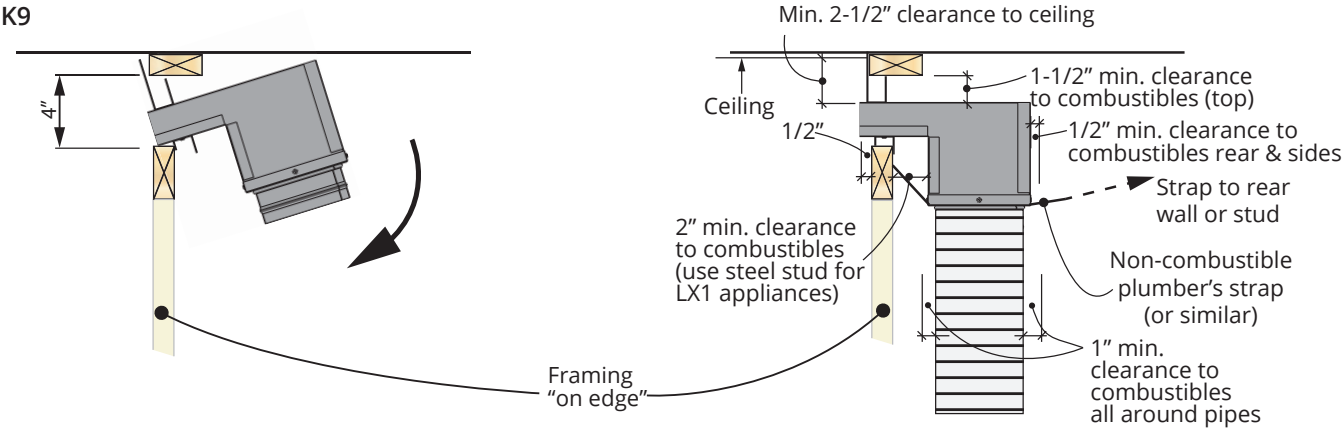

NOTE—Sprinklers

Depending on room temperature, HeatShift air discharge temperatures can be in the range of 210 °F (99 °C). Please refer to local building code, choose appropriate sprinkler heads and place them accordingly.

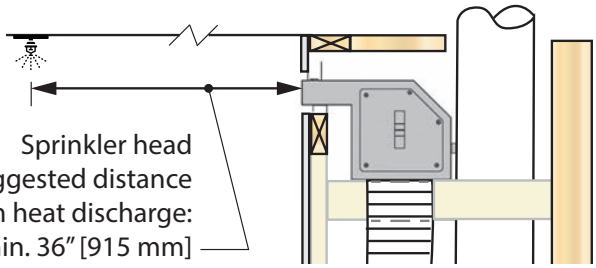

Appendix D - HeatShift System

Wall Valance Discharge Opening using LDK7—Duct Termination Plates

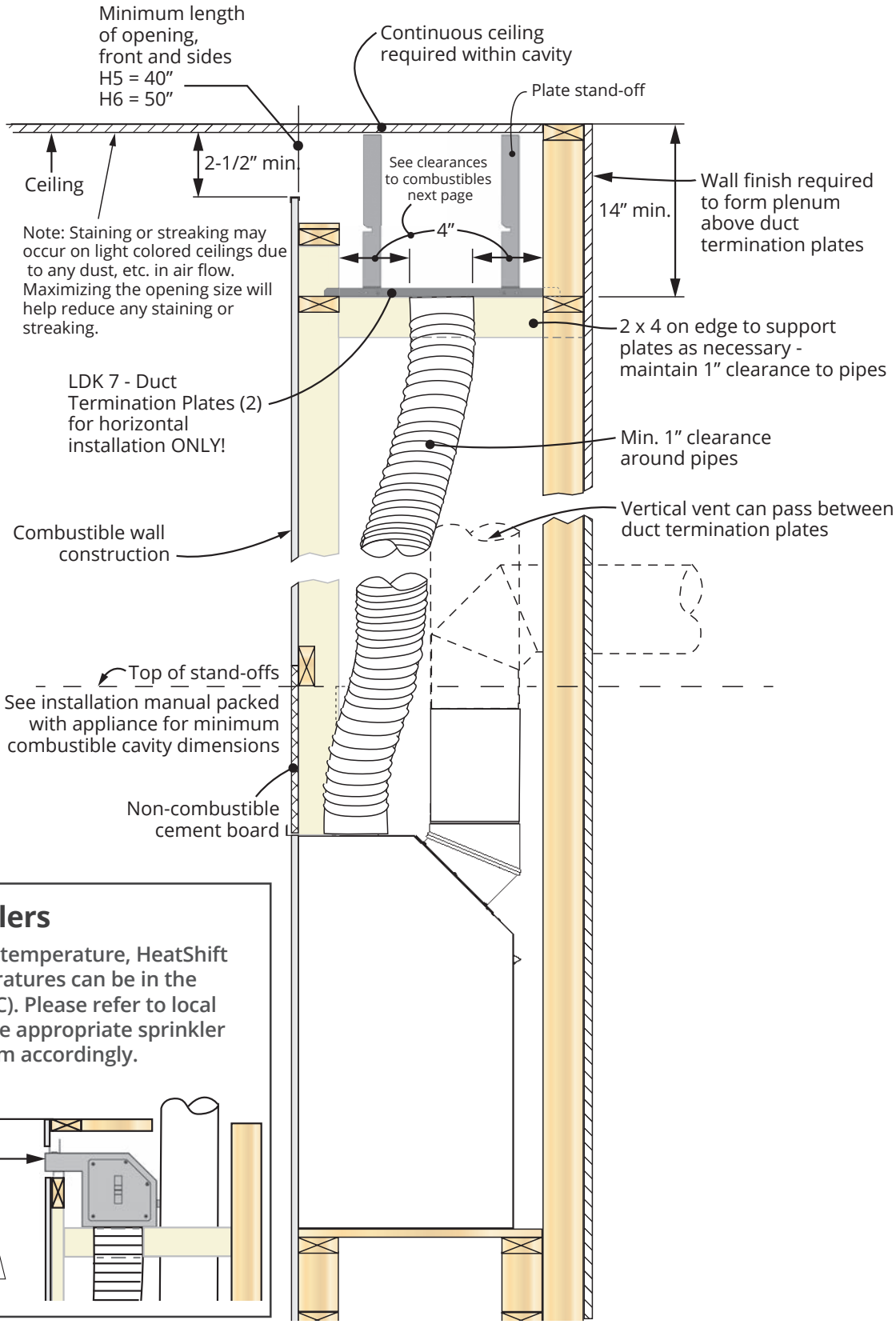

NOTE—Sprinklers

Depending on room temperature, HeatShift air discharge temperatures can be in the range of 210 °F (99 °C). Please refer to local building code, choose appropriate sprinkler heads and place them accordingly.

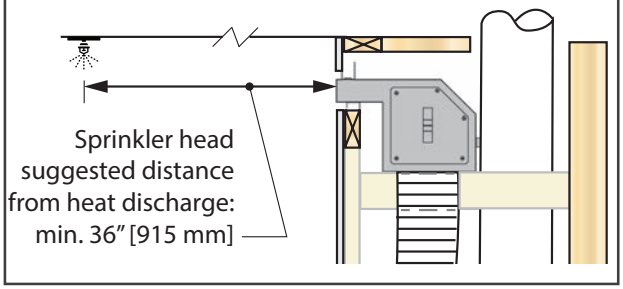

Appendix D - HeatShift System

LDK7 Clearances to Combustibles

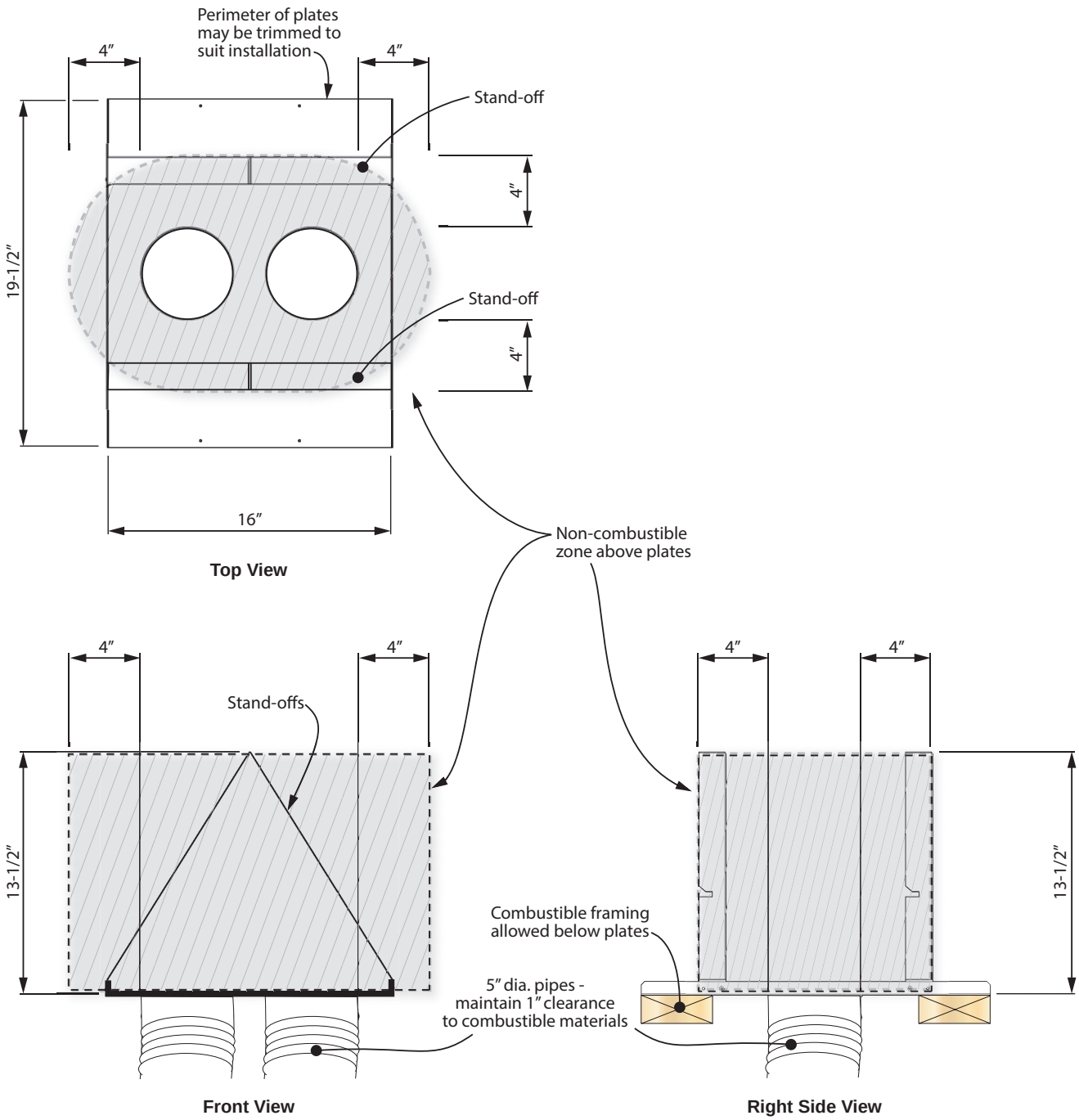

Appendix D - HeatShift System

HeatShift Kit LDK1, LDK4 with optional 1270RBK HeatSplit Remote Blower Kit

(not approved with outdoor installations)

HeatShift™ + HEATSPLIT

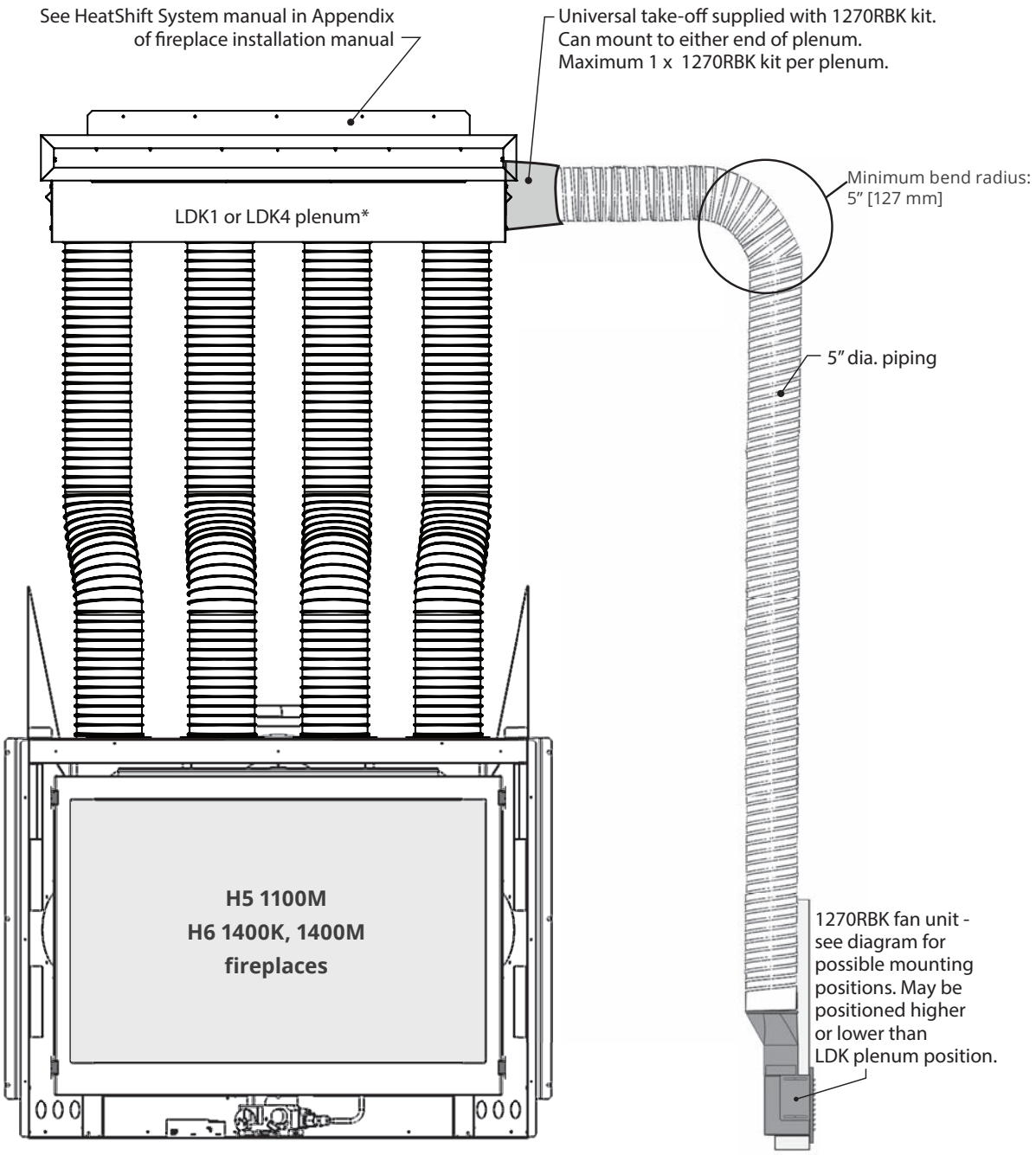

Appendix D - HeatShift System

COMBUSTIBLE Mantel Clearances H5 and H6 appliances (when using HeatShift System ONLY)

Sidewall clearances remain as stated in this installation manual.

⚠ WARNING

RISK OF OVERHEATING AND FIRE! Ensure HeatShift installation is complete AND internal convection baffle is removed (see HeatShift installation) when using these combustible mantel clearances.

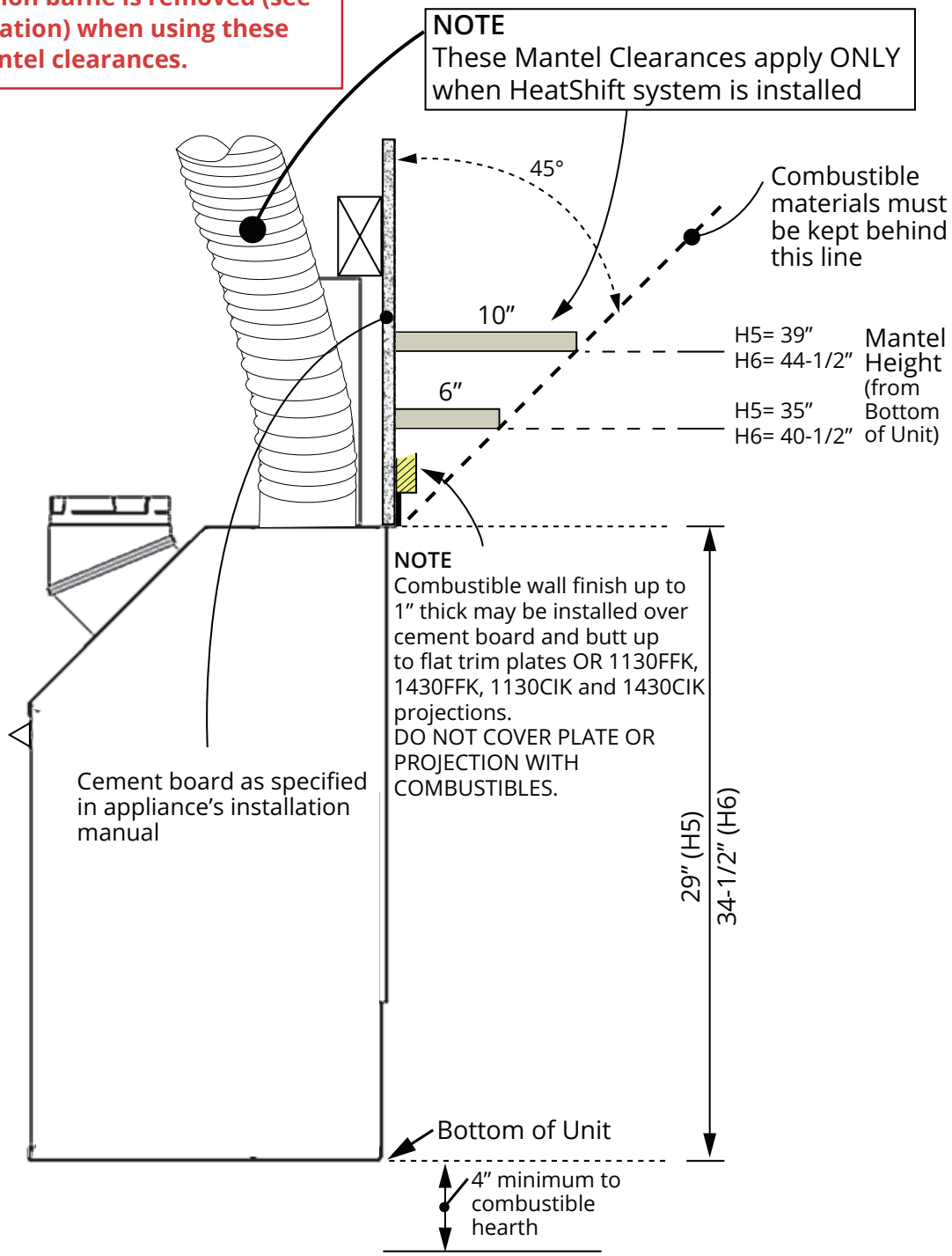

Appendix D - HeatShift System

Remove Convection Baffle

To be effective the HeatShift Kits require that a convection baffle located above the firebox inside the appliance case be removed to allow the hot airflow to convect upwards into ducts installed on the fireplace.

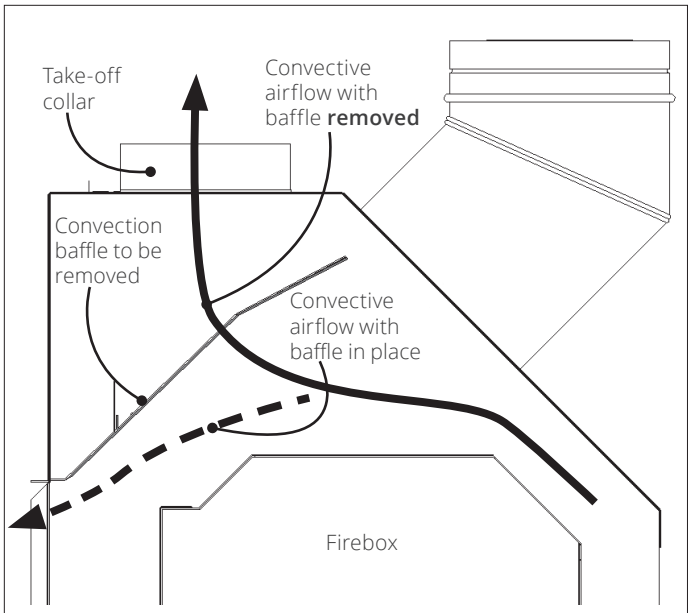

Re-direction of convected air after removing baffle

! Remove the convection baffle from the appliance. It is held in place by screws located right behind the upper edge of the fireplace opening (3 screws/baffle for 1100's, 4 for 1400's bafffle). Recycle this panel as it is no longer needed.

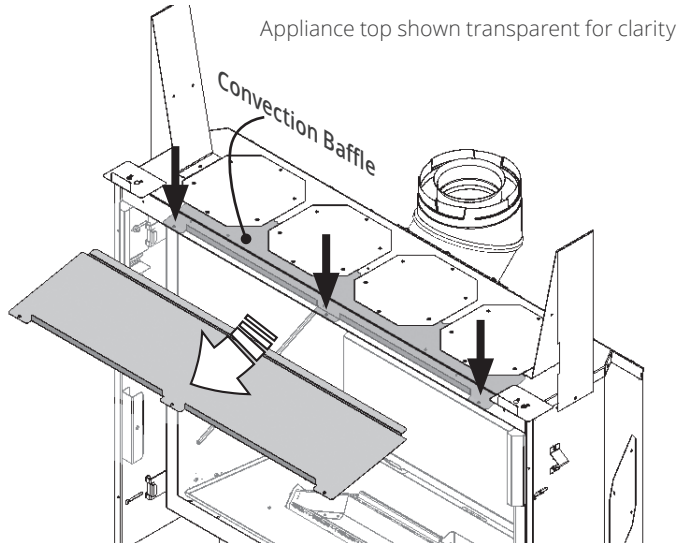

Remove convection baffle—1100M

Install HeatShift collars

1. Remove the four cover plates on top of the appliance case (6 screws each).

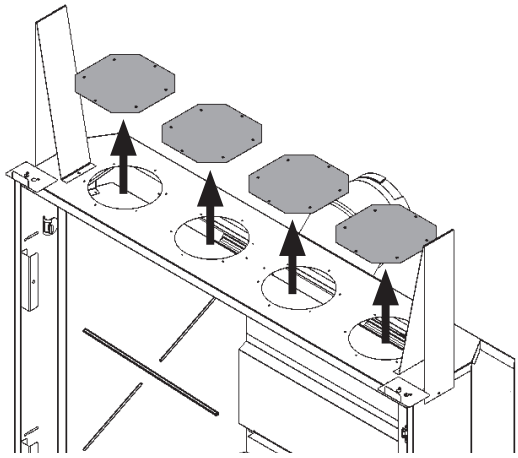

2. Install the collars on the holes on top of the appliance's case (6 screws each).

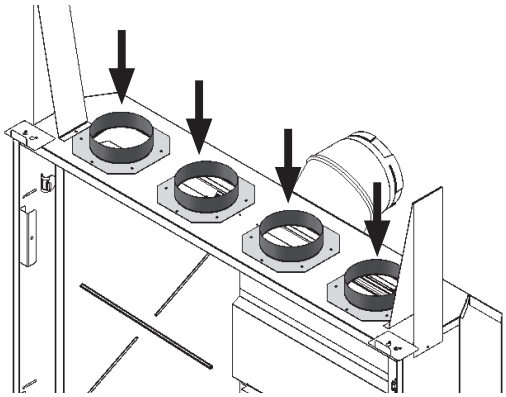

⚠ WARNING

DO NOT INSTALL 1270RBK Remote Blower Kit to any of these 4 takeoffs.

⚠ WARNING

All FOUR (4) takeoffs MUST BE CONNECTED TO PLENUM(S).

Appendix D - HeatShift System

Install Plenum Kits (LDK1, LDK3, LDK4 & LDK9) —see next page for LDK7 Duct Termination Plates

1. Frame a rough opening at the desired location—see earlier sections of this manual for allowable plenum positions and rough frame opening sizes.
2. Install top mounting bracket(s) to the plenum using screws provided (use the short sheet metal screws provided otherwise the screw tails (ends) will interfere with the finishing frame when installed).

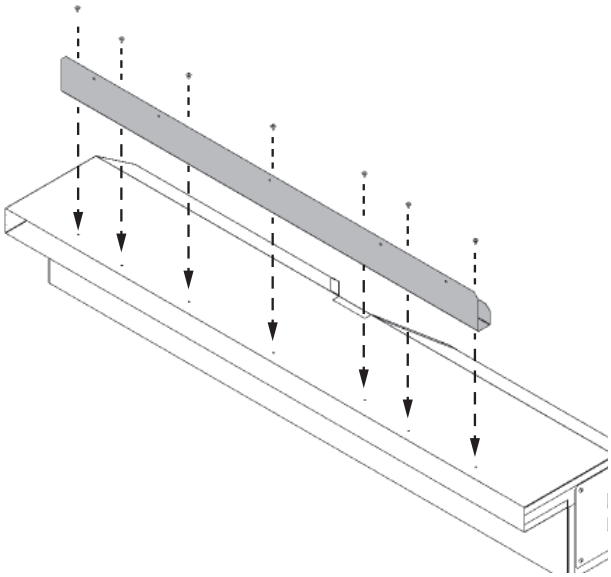

3. Install the plenum(s) into the rough frame opening maintaining minimum clearances to combustibles as listed—see "Rough Frame Openings". Fix the plenum to the framing using nails or screws through the top mounting bracket. **Note that the mounting brackets are not intended to carry the weight of the plenum and pipes. Provide support to the underside of the plenum and ensure the plenum is level and its outlet is not distorted (see "Framing and Clearances—Plenums, side view" for details).** Use metal strapping (all-round, not supplied) as required to further secure the plenum to framing.
4. Attach one section of UL-181, Class 1 approved air duct to each of the collars and secure it with gear clamps provided. **DO NOT SPLICE DUCTS!**
5. Attach the top of the pipe sections to the plenum securing them with the gear clamps provided. An upward slope must be maintained in horizontal sections of pipes for proper convection. Use straps as necessary to maintain the pipes positions. Support horizontal sections every 24 inches.
6. Paint the inside surfaces of the plenum using high-temperature flat black spray paint for installations where the inside of the plenums may be visible.

   Note: The flanges of the white finishing frame (when used) will insert approximately 1-1/4" into the plenum covering the shiny sheet metal.
7. Install the finishing frame or louver to the plenum after the wall finish is completed:
   LDK1, LDK4, LDK9: Use the LDK2, LDK5 or LDK10 depending of the length of the plenum.

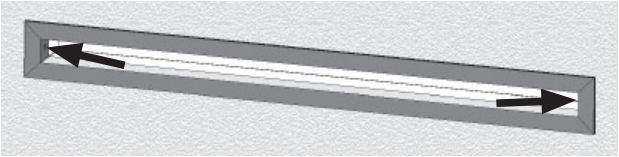

   LDK3: Use the grilles provided with the kit.

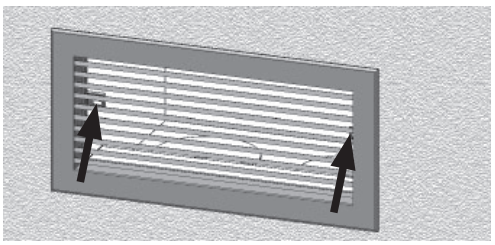

   Note: The frame/louver are finished white but may be painted another color if desired; use high temperature paint (250°F). You may also finish up to the perimeter of the plenum opening with your material of choice and not use the frame or louver. Do not finish over any of the opening in the plenum outlet.
8. Continue with the fireplace installation.

Appendix D - HeatShift System

Install Duct Termination Plates (LKD7) —see previous page for LDK1, LDK3, LDK4 & LDK9 Plenum kits

1. Frame a rough opening and platform at the desired location—see earlier sections of this manual for allowable duct termination plates positions and rough frame opening sizes.
2. On each duct termination plate, rotate both stand-offs to the vertical position and secure in place using screws provided.

2 stand-offs per plate

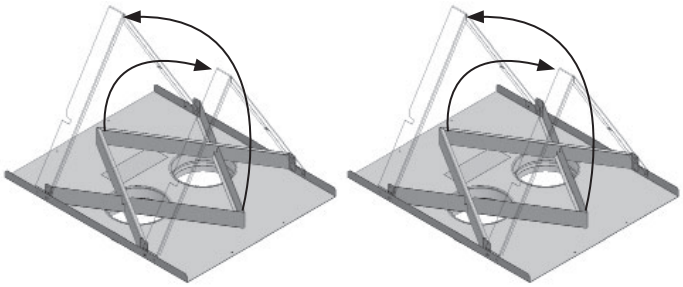

3. Install the termination plates into the framing ensuring collars/pipes on underside of plates maintain 1 inch clearance to combustibles and clearance to combustible above the plates are maintained—see "LDK7 Clearances to Combustibles".
   The termination plates perimeter may be trimmed as necessary to accommodate framing. Secure the termination plate to framing using screws or nails to avoid movement.
4. Attach one section of UL-181, Class 1 approved air duct to each of the collars and secure it with gear clamps provided. **DO NOT SPLICE DUCTS!**
5. Attach the top of the pipe sections to the duct termination plates securing them with the gear clamps provided. An upward slope must be maintained in horizontal sections of pipes for proper convection. Use straps as necessary to maintain the pipes positions. Support horizontal sections every 24 inches.
6. Continue with the fireplace installation.

Repair Parts List

	Description	Part no.
LDK1	48" Quad Hot Air Plenum Kit	
	48" x 2" quad plenum	4005476
	5" take-off collars (4)	4005478
	Top mounting bracket/standoffs	4007211
	#8 slotted drive screws 1/4" (7)	798601
LDK2	48" Outlet Frame Kit for LDK1	
	Aux Frame-SPL 48" x 2" white	4005612
LDK3	14" Double Hot Air Plenums Kit	
	14" x 6" double plenums (2)	4005464
	5" take-off collars (4)	4005478
	DABL-00-C-SPL 14" x 6" Grilles white (2)	4005614
	Top mounting bracket/standoffs (2)	4005566
	#8 slotted drive screws 1/4" (6)	798601
LDK4	38" Quad Hot Air Plenum Kit	
	38" x 2" quad plenum	4005477
	5" take-off collars (4)	4005478
	Top mounting bracket/standoffs	4007213
	#8 slotted drive screws 1/4" (7)	798601
LDK5	38" Outlet Frame Kit for LDK4	
	Aux Frame-SPL 38" x 2" white	4005613
LDK6	5" Aluminum 2-ply Flex Kit	
	5" dia 10' (uncompressed) aluminum chimney liners (2)	4005635
	4.5" - 6.5" ss gear clamps (8)	4005642
LDK7	Duct Termination Plates	
	Plate and collar assembly (2)	4006747
	5" take-off collars (4)	4005478
	Screws 8 x 3/8 tap PN HD PH (12)	100A757
LDK9	30" Quad Hot Air Plenum Kit	
	30" x 2" quad plenum	4007903
	5" take-off collars (4)	4005478
	Top mounting bracket/standoff	4007601
	#8 slotted drive screws 1/4" (5)	798601
LDK10	30" Outlet Frame Kit for LDK9	
	Aux Frame-SPL 30" x 2" white	4007951

Each LDK kit is sold separately.

Appendix E - Spare Parts

	Description	Part Number
1	Heat shield, stand-offs	4008934
2	Heat shield, vent	4004460
3	45 degrees flanged elbow	0945JM
4	Elbow gasket	4002999
5	Top stand-offs (2)	4004469
6	Restrictor plates (2)	4001222
7	Cover plates (4)	4005409
8	Engine positioning brackets (2)	4004546
9	Take-off cover (2)	4003046
10	Side stand-offs (2)	4000976
11	LH Convection gap bracket	4006948
12	RH Convection gap bracket	4006953
13	Brackets, for trim (4)	4008935
14	Frame fixing brackets (2)	4003703
15	Window latches assembly (4)	4008901
15a	Window latches pull handle	4009219
15b	Air deflector	4010581
16	Liner panel anchors (4)	4001283
17	Removable convection baffle	4005690
18	H5 Steel burner assembly	4007401AH
19	Burner cover plate	4007586AH
20	Window assembly	4008932
21	Hot glass warning plate	4003093
22	1/2" Vermiculite insulation board	4001489
23	Module plate assembly (natural gas)	4007007
	Module plate assembly (propane gas)	4007008
24	Pilot shield	4008836AH
25	Pilot gaskets (2)	4000715
26	PSE Pilot assembly 36" (natural gas)	4008484
	PSE Pilot assembly 36" (propane gas)	4008485
27	Thermocouple	4008490
28	Pilot injector #BL22N (natural gas)	4008493
	Pilot injector #BL14LP (propane gas)	4008494
28a	Pilot tube	4008486
	Electrode: included with no. 26	
	Ignition wire: included with no. 26	
29	Pilot stand	4007751
30	1100M Air shutter stopper	4008794
31	1/8" NPT brass socket head pipe plug	4008003
32	Orifice/aeration block	4007702
33	Gas orifice #36 (natural gas)	4007000-36
	Gas orifice #51 (propane gas)	4007000-51
34	Air shutter	4008082
35	Aeration lever	4005810

	Description	Part Number
36	#10 x 1/2" flat washers (2)	4006692
37	3/16" x 9/16" spring washers (2)	4006691
38	#10-24 zinc finish steel reverse nuts (2)	4007890
39	Valve mount	4003956
40	GV60 valve, no connectors	4000873
40a	Inlet connector	4000746
40b	Inlet connector, flex pipe	4002833
40c	Straight connector	220K891
40d	By-pass screw #185 (natural gas)	4000300
	By-pass screw #125 (propane gas)	incl. with #40
41	Thermocurrent interrupter	4001037
42	Pipe s/s flex ACS-375MM-12, incl. #40b	4000345
43	Block/pipe connector	4006689
44	Gas pipe, including 2 nuts flare 220K558	4006993
45	Single pipe sealing plate	4006982
46	Module plate	4007004
47	Gasket module plate, rear	4003925
48	Gaskets module plate, RH	4003926
49	Gasket module plate, front	4003924
50	Gaskets module plate, LH	4003927
51	Burner mounting bracket, LS	4007538
52	Burner mounting bracket, RS	4007537
53	Receiver Valor 10 two-way	4005597
54	Wire harness GV60	4001187
55	Yellow cable to interruptor	4002096
56	Red cable to interruptor	4001035
59	Valor 10-button handset, black	4007548
60	Valor 10 handset wall holder	4004459
61	GV60 Valve Repair Kit	4004544
62	Remote battery & Wall switch kit	RBWSK
a	Junction box	4005527
b	Cover plate & 4 screws	4005526
c	Battery holder	4005525
d	Cable tie	4005524
e	Harness assembly	4005523
f	Plate with magnets	4005391
g	Long screws (4)	4001444
h	Wall switch with 2 screws	4005522
i	Battery cover assembly	4005390
63	Liner panels - complete sets	
	Ledgestone Liner Set	1115LSL
	Fluted Black Liner Set	1125FBL
	Plain Black Liner Set	1160PBL

Appendix E - Spare Parts

	Description	Part Number
	Glass Liner Set	1170RGL
	Rear spacers (2)	4004712AH
	Side anchors (2)	4004710AH
	Side spacers (8)	4004711AH
	Herringbone Liners	1175HBL
	Grey Brick Liner Set	1185GBL
64	Rear panel	
	Ledgestone	4003246
	Fluted Black	4003258
	Black	4004748
	Glass	4004280
	Herringbone	4006184
	Grey	4012422
65	LH side panel	
	Ledgestone	4003244
	Fluted Black	4003256
	Black	4004746
	Glass	4004278
	Herringbone	4006186
	Grey	4012424
66	RH side panel	
	Ledgestone	4003245
	Fluted Black	4003257
	Black	4004747
	Glass	4004279
	Herringbone	4006185
	Grey	4012428
67	Top panel	
	Ledgestone	4003211
	Black	4003212
	Black	4003212
	Black	4003212
	Herringbone	4006187
	Grey	4012426
69	Driftwood Logs	1100DWK
70	Driftwood Logset & pebbles	4008794
71	Log #H35	4008795
72	Log #H36	4004371
73	Log #H37	4008797
74	Log #H38	4004372
75	Brown beach pebble (2)	4003082
76	Small grey beach pebble (2)	4003086
77	White beach pebble	4003084

	Description	Part Number
78	Black beach pebble	4003085
79	Beige beach pebble	4003087
80	Driftwood plaque LH rear	4008799
81	Driftwood plaque RH rear	4008800
82	Driftwood plaque LH front	4008801
83	Driftwood plaque RH front	4008802
84	Traditional Logs	1100LSK
85	Traditional Logs only	4009003
86	Log #H41	4008820
87	Log #H42	4008821
88	Log #H43	4008822
89	Log #H44	4008823
90	Log #H45	4008824
91	Log #H46	4008825
92	Log #H47	4008826
93	Plaque and Ember bed	4008976
94	Ember bed #H53	4008814
95	Birch + Traditional plaque LH rear	4008827
96	Birch + Traditional plaque RH rear	4008828
97	Birch + Traditional plaque LH front	4008829
98	Birch + Traditional plaque RH front	4008830
99	Birch Logs	1100BLK
100	Birch Logs only	4009005
101	Log #H50	4008811
102	Log #H51	4008812
103	Log #H52	4008813
104	Log #H54	4008815
105	Log #H55	4008816
106	Log #H56	4008817
107	Log #H57	4008818
108	Plaque and Ember bed	4008976
109	Ember bed #H53	4008814
110	Birch + Traditional plaque LH rear	4008827
111	Birch + Traditional plaque RH rear	4008828
112	Birch + Traditional plaque LH front	4008829
113	Birch + Traditional plaque RH front	4008830

Appendix E - Spare Parts

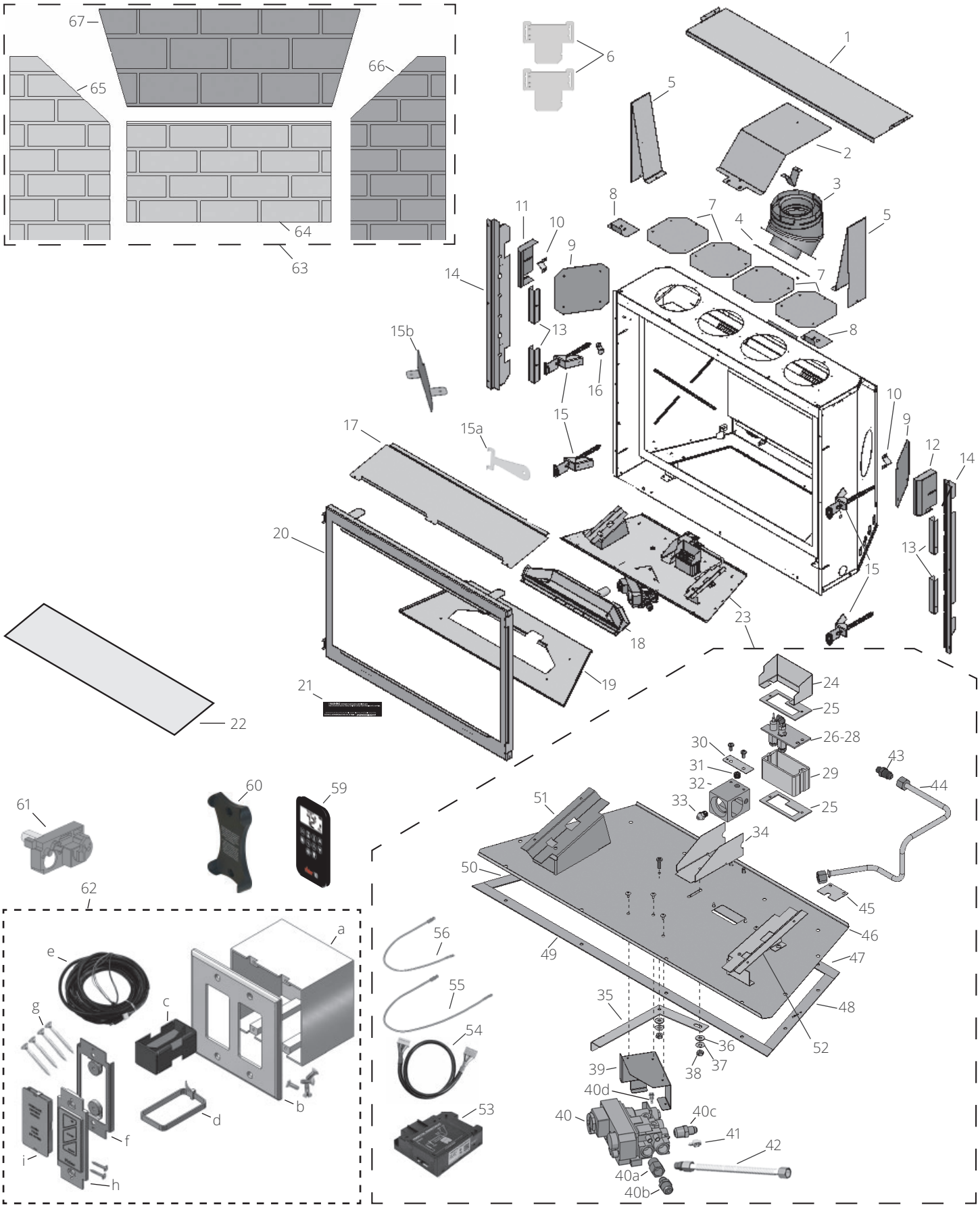
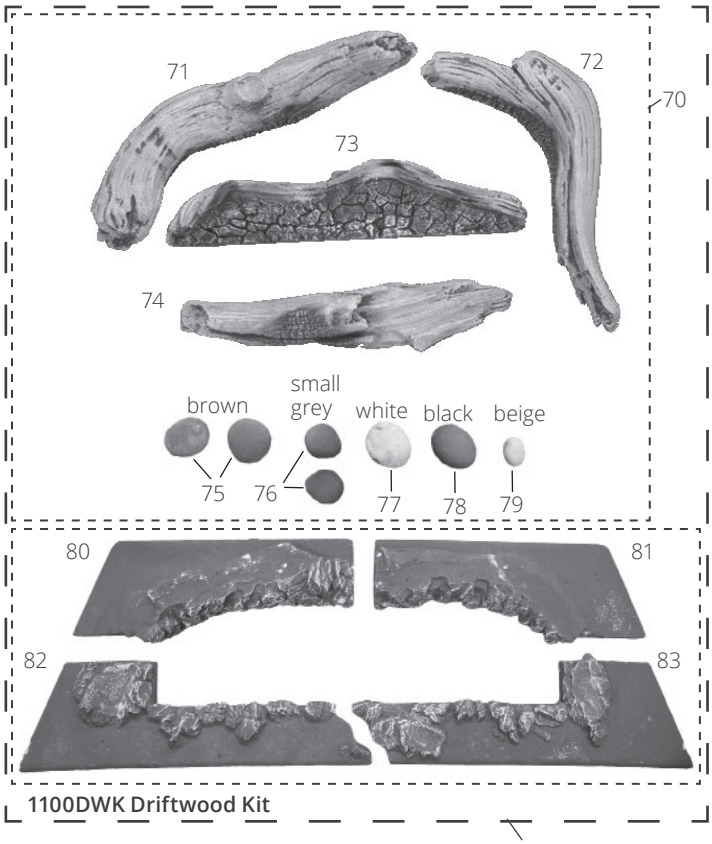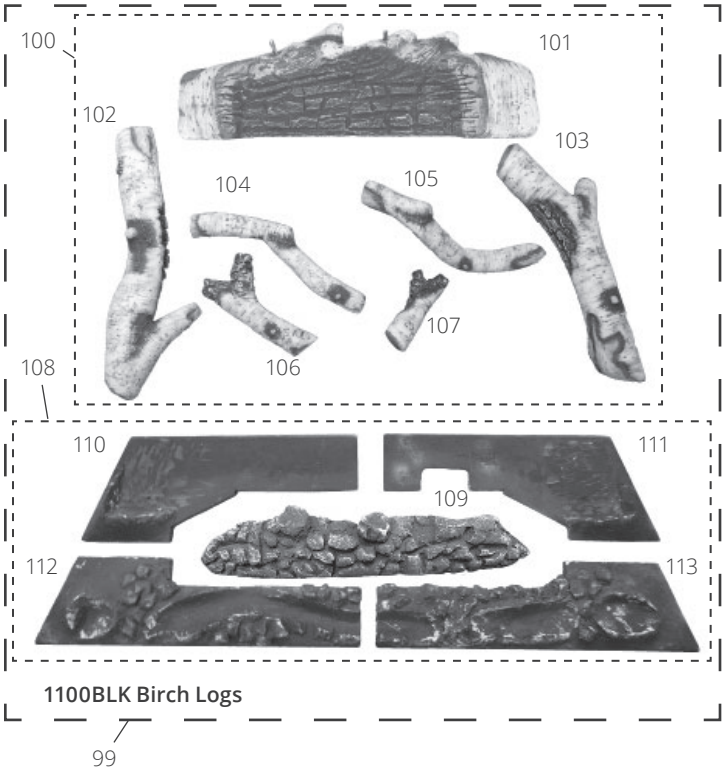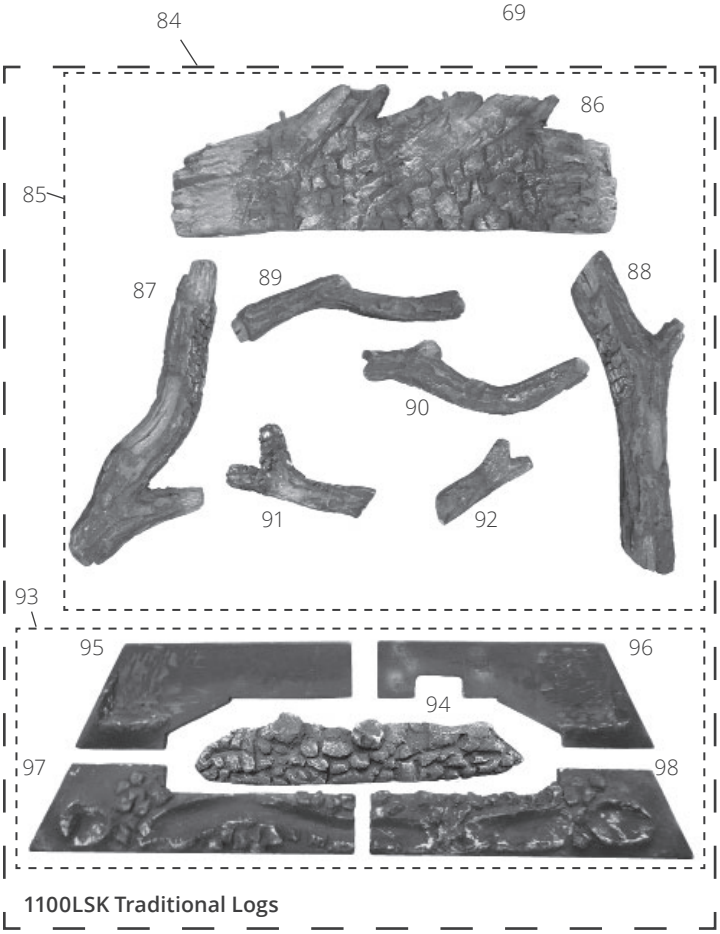
Appendix E - Spare Parts