Installation Manual

L1

Direct Vent Zero Clearance
Gas Fireplace
natural gas 1600KN
propane gas 1600KP

SEE-THRU

Installer: Place model/serial number here.

Installer: Leave this manual with the appliance.
Consumer: Retain this manual for future reference.

⚠ WARNING:
FIRE OR EXPLOSION HAZARD
Failure to follow safety warnings exactly could result in serious injury, death, or property damage.

Do not store or use gasoline or other flammable vapors and liquids in the vicinity of this or any other appliance.

WHAT TO DO IF YOU SMELL GAS

- **Do not try to light any appliance.**
- **Do not touch any electrical switch; do not use any phone in your building.**
- **Leave the building immediately.**
- **Immediately call your gas supplier from a neighbor's phone. Follow the gas supplier's instructions.**
- **If you cannot reach your gas supplier, call the fire department.**

Installation and service must be performed by a qualified installer, service agency or the gas supplier.

⚠ DANGER

Hot glass will cause burns.

Do not touch glass until cooled.

Never allow children to touch glass.

A barrier designed to reduce the risk of burns from the hot viewing glass is provided with this appliance and must be installed for the protection of children and other at-risk individuals.

4008055-19

This appliance may be installed in an after-market permanently located, manufactured (mobile) home where not prohibited by local codes. This appliance is only for use with the type of gas indicated on the rating plate. This appliance is not convertible for use with other gases, unless a certified kit is used.

INSTALLER: Leave this manual with the appliance.

CONSUMER: Retain this manual for future reference.

Massachusetts:

The piping and final gas connection must be performed by a licensed plumber or gas fitter in the State of Massachusetts. Also, see Carbon Monoxide Detector requirements in this installation manual, page 57.

⚠ WARNING

This product can expose you to chemicals including Benzene, which is known to the State of California to cause cancer and birth defects or other reproductive harm. For more information go to www.P65Warnings.ca.gov.

Note: Natural gas, in its original state, contains Benzene.

This manual contains instructions to install the **ENGINE ONLY.** A trim kit is **REQUIRED** to complete the installation. A barrier screen is provided with the trim kit. **Refer to the manual supplied with the trim for installation.**

This appliance is a domestic room-heating appliance. It must not be used for any other purposes such as drying clothes, etc.

This appliance is suitable for installation in a bedroom or bed sitting room.

Ce guide est disponible en français sur demande.

NATIONAL FIREPLACE INSTITUTE NFI ADVOCATE

We recommend a US Certified National Fireplace Institute (NFI) specialist install our gas hearth products.

DESIGN CERTIFIED

CERTIFIED

The information contained in this manual is believed to be correct at the time of printing. Miles Industries Ltd. reserves the right to change or modify any information or specifications without notice. Miles Industries Ltd. grants no warranty, implied or stated, for the installation or maintenance of your heater, and assumes no responsibility for any consequential damage(s).

© Copyright Miles Industries Ltd., 2026. All rights reserved.
Designed and manufactured for Miles Industries Ltd.

Valor Fireplaces
190–2255 Dollarton Highway
North Vancouver, BC, Canada V7H 3B1
T 604.984.3496 F 604.984.0246
valorfireplaces.com

Welcome to Valor®

This appliance has been professionally installed by:
Dealer Name: _____
Phone:_____

Please read this manual BEFORE installing and operating this appliance.

Fireplace Safety 4
Specifications 6
Kits & Accessories 7
Approved Venting Components 8
Dimensions & Location 10
Installation Planning 11
- Before Installing 11
- Overview 12
- Mantel Clearances 13
- Framing 15
- Wall Finish 17
  - Material Specifications 17
  - Non-Combustible Cement Board 17
  - Avoiding Cracking Wall Finishes 19

Venting 20
- Overview 20
- Co-Axial 21
  - Typical Co-axial Venting Components 21
  - Restrictor Settings 23
  - Horizontal Vent Termination 24
  - Vertical Vent Termination 25
- Co-Linear Conversion 26
  - Installation Into Existing Adjacent Chimney 26
  - Existing Fireplace Preparation 26
  - Example of Co-linear Conversion Accessories 27

Installation 28
- Appliance Preparation 28
  - Unpack Appliance 28
  - Fit Standoffs 28
  - Convert from Top to Rear Outlet (if required) 28
  - Fit Appliance into Framing 29
  - Remove Window 30
- HeatShift™ System—if used 31
  - Remove Convection Baffles 31
  - Install HeatShift Take-Off Collars to Appliance 31
- Electrical Wiring 32
- Gas Supply 34
- Liners 36
- Fuel Beds 37
  - Birch Log Kit 1505BLKV2 37
  - Driftwood Kit 1505DWKV2 40
  - Decorative Glass Murano 1500DGM 43
  - Rocks & Shale Set 1514RSS 44
  - Split Wood Kit 1505SWKV2 46
- Window Re-Installation & Checking 49
- Wall Switch 50
- Remote Control Pairing 52
- Checking Operation and Aeration 54
- Trim & Barrier Screen 55

Wiring Diagram 56
Commonwealth of Massachusetts 57
Appendix A—Lighting Instructions 59
Appendix B—Remote Control Operation 60
Appendix C—Wall Switch Operation 67
Appendix D—HeatShift System 68
Appendix E—Spare Parts 89

Fireplace Safety

This manual contains very important information about the safe installation and operation of the fireplace. Read and understand all instructions carefully before installing and operating the fireplace. Failure to follow these instructions may result in possible fire hazard and will void the warranty.

Replacement manuals are available by contacting the Valor Customer Service at 1-800-468-2567, or by visiting valorfireplaces.com.

⚠ WARNING: Extremely Hot!

Heat and flammability

- Some parts of the fireplace are extremely hot, particularly the glass windows. Use the barrier screens provided or a gate to reduce the risk of severe burns.
- The glass windows can exceed 500°F at full capacity.
- Always keep the appliance clear and free from combustible materials, gasoline, and other flammable vapors and liquids.
- Be aware of hot wall surfaces! The walls directly above the fireplace can get very hot when the fireplace heats. Although safe, it may reach temperatures in excess of 200°F (93°C) depending on choice of optional accessories. Do not touch!
- Be aware of hot hearth/floor surfaces! Any projections directly around the fireplace can get very hot when the fireplace heats. Although safe, they may reach temperatures in excess of 200°F (93°C)depending on elevation of hearth. Be careful of touching these! Temperature of projection surfaces will be reduced when barrier screens are installed.
- Some materials or items, although safe, may discolor, shrink, warp, crack, peel, and so on because of the heat produced by the fireplace. Avoid placing candles, paintings, photos and other combustible objects sensitive to heat or furniture within 36 inches (0.9 m) around the fireplace.
- Due to it high temperatures, the appliance should be located out of traffic areas and away from furniture and draperies.
- Clothing or flammable material should not be placed on or near the appliance.

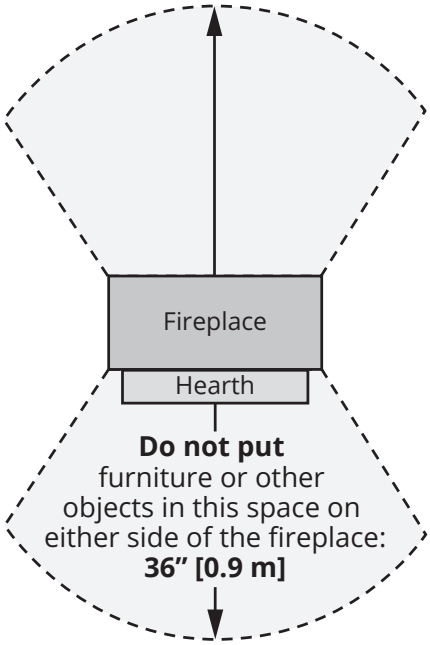

Barrier Screen and Safety

- A barrier designed to reduce the risk of burns from the hot viewing glass is provided with this appliance and shall be installed for the protection of children and other at-risk individuals.
- Children and adults should be alerted to the hazards of high surface temperature and should stay away to avoid burns or clothing ignition.
- Young children should be carefully supervised when they are in the same room as the appliance. Toddlers, young children, and others may be susceptible to accidental contact burns. A physical barrier is recommended if there are at-risk individuals in the house. To restrict access to a fireplace or stove, install an adjustable safety gate to keep toddlers, young children, and other at-risk individuals out of the room and away from hot surfaces.
- Any safety screen, guard, or barrier removed for servicing an appliance must be replaced prior to operating the appliance.

Fireplace Safety

Glass windows

⚠ WARNING

Do not operate this appliance with the glass front removed, cracked, or broken.

Do not strike or slam the glass front.

Replacement of the glass front should be performed by a licensed or qualified service person.

- The glass front assemblies must be in place and sealed before the unit can be placed into safe operation.
- The glass front assemblies must only be replaced as complete units, as supplied by the fireplace manufacturer. No substitute material may be used.
- Do not use abrasive cleaners on the glass front assemblies. Do not attempt to clean the glass when it is hot.

Venting

- This unit must be used with a vent system as described in this manual. No other vent system or components may be used.
- Never obstruct the flow of combustion and ventilation air. Keep the front of the appliance clear of all obstacles and materials for servicing and proper operation.
- This gas fireplace and vent assembly must be vented directly to the outside and must never be attached to a chimney serving a separate solid fuel burning appliance. Each gas appliance must use a separate vent system. Common vent systems are prohibited.

Intended use

- This appliance is designed and approved as a supplemental heater and provides the potential for most energy conservation when used while attended. The use of an alternate primary heat source is advisable.
- This unit is not for use with solid fuel.
- Do not use this heater as a temporary source of heat during construction.

Installation and Servicing

- Installation and repair should be done by a qualified service person. The appliance should be inspected before use and at least annually by a professional service person. More frequent cleaning might be required due to excessive lint from carpeting, bedding material, et cetera. It is imperative that control compartments, burners, and circulating air passageways of the appliance be kept clean.
- Do not use this appliance is any part has been under water. Immediately call a qualified service technician to inspect the appliance and to replace any part of the control system and any gas control that has been under water.

⚠ WARNING

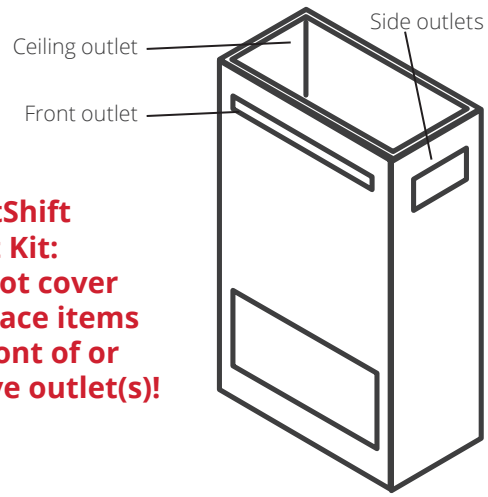

HeatShift Duct Kit: Do not cover or place items in front of or above outlet(s)!

Specifications

Approval & Codes

This appliance is certified to ANSI Z21.88/CSA 2.33 American National Standard / CSA Standard for Vented Gas Fireplace Heaters for use in Canada and USA, and to CGA 2.17-91 High Altitude Standard in Canada. This appliance is for direct vent installations.

This appliance complies with CSA P.4.1-15 Testing method for measuring annual fireplace efficiencies.

The installation must conform to local codes or, in the absence of local codes, with the National Fuel Gas Code, ANSI Z223.1/NFPA 54 or the Natural Gas and Propane Installation Code CAN/CGA-B149.1. Only qualified licensed or trained personnel should install this appliance.

This appliance must be electrically grounded in accordance with local codes, or, in the absence of local codes, with the National Electrical Code, ANSI/NFPA 70 or the Canadian Electrical Code, CSA C22.1.

Ratings

Model	1600KN	1600KP
Gas	Natural	Propane
Altitude (Ft.)*	0-4,500 feet*	
Input Maximum (Btu/h)	30,000	30,000
Input Minimum (Btu/h)	19,000	21,000
Manifold Pressure (in w.c.)	3.5”	9.0”
Minimum Supply Pressure (in w.c.)	5”	11”
Maximum Supply Pressure (in w.c.)	10”	14”
Main Burner Injector Marking	DMS#36	DMS#51
Pilot Injector Marking	51	30
Min. Rate By-Pass Screw	220	160

*High Altitude Installations

Input ratings are shown in BTU per hour and are certified without deration for elevations up to 4,500 feet (1,370 m) above sea level.

For elevations above 4,500 feet (1,370 m) in USA, installations must be in accordance with the current ANSI Z223.1 and/or local codes having jurisdiction. Heating value of gas in some areas is reduced to compensate for elevation—consult your local gas utility to confirm.

For installations at elevations above 4,500 feet (1,370 m) in Canada, please consult provincial and/or local authorities having jurisdiction.

Supply Gas

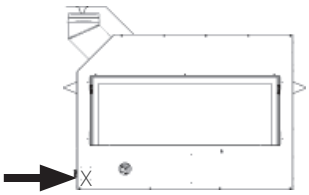

Heater engine 1600KN uses natural gas.
Heater engine 1600KP uses propane gas.

The supply pressure must be between the limits shown in the *Ratings* section.

The supply connection is 3/8” NPT male and located on the left hand side of the firebox. A shut-off valve (not supplied) is required on the supply line to isolate the unit during service. See *Gas Supply Installation* section for details.

Conversion Kits

The 1600K are supplied as natural gas or propane gas and are field convertible between fuels. See instructions packaged with the conversion kits for further information.

Electrical

The 1600K are designed to run on battery power and do not require an electrical power source to operate as a heater. However, they require electrical power to operate optional 1270RBK Remote Blower Kit or GV60WIFI WiFi Kit.

HeatShift™System

The 1600K are designed to allow the installation of the optional HeatShift System, a convection system that redistributes the warm air flow away from the fireplace opening to a more desirable location using natural convection, without use of a fan.

The warm air flow may be relocated to a position higher up the wall, out the sidewalls, or even to another room. The result is much cooler wall temperatures above the fireplace opening for locating televisions, artwork, etc.

Please note that the framing and mantel clearances are affected by the installation of the HeatShift System. Refer to “Appendix D—HeatShift System” on page 68 for more information.

Outdoor Conversion Kit

The 1600K models are supplied standard for indoor applications and may be adapted for installation in specific “outdoor” applications protected from weather as defined in the GV60CKO outdoor conversion kit manual.

Kits & Accessories

Required Kits

Information accurate at the time of printing and subject to change without notice.

Fuel Beds (choose one)		
1505DWKV2	Driftwood Kit	
1500DGM	Decorative Glass Murano Kit	
1514RSS	Rock & Shale Kit	
1505SWKV2	Split Wood Kit	
1505BLKV2	Birch Logs Kit	
Liners Panels (choose one)		
1615FBL	Fluted Black Liner	
1625RGL	Reflective Glass Liner	
Trims (choose one)		**Barrier Screen**
1530CIK**	Clean Install Kit - Fine Mesh - REQUIRES HeatShift	4007929
1550LSBv2	Linear 3-1/2" Surround Black	4004215
1575LFB	Linear 1" Finishing Trim Black	4005564
Approved Venting Components		
See following pages for a list of approved venting components		

Optional Accessories

Information accurate at the time of printing and subject to change without notice.

Gas Conversion Kits	
1500KNGK	Conversion to natural gas
1500KPGK	Conversion to propane gas
Other Accessories	
GV60CKO*	Outdoor Fireplace Conversion Kit
1270RBK	HeatSplit Remote Blower Kit
GV60WIFI*	WiFi Kit (requires GV60VM)
GV60VM*	V-Module power supply (required for WiFi Kit)
LDK	HeatShift System Kits (gravity flow) - MANDATORY with 1530CIK Kit
Hearth Gate	Hearth gates such as Cardinal's VersaGate are available at retail stores carrying safety products for children.

WARNING

***NO ELECTRICAL CONNECTION ALLOWED for any outdoor installation!**

WARNING

****HeatShift System MUST be installed on this appliance when using 1530CIK—Clean Installation Kit!**

Approved Venting Components

Approved Direct Vent Suppliers for Valor Models 1500 and 1600[4]							
Venting Parts Description			Venting Parts Code / availability by Manufacturer				
			DURA-VENT	SELKIRK	ICC EXCEL DIRECT	MILES INDUSTRIES	BDM
Termination Caps	Horizontal	Standard Co-axial	46DVA-HC	4DT-HC	TM-4HT	658DVK2	DVR6-HC
		Deluxe Co-axial	—	—	TM-4RHT	—	DVR6-HCP
		High Wind Co-axial	—	—	—	—	—
	Vertical	Standard Co-axial	46DVA-VC	4DT-VT	—	—	DVR6-VCH DVR6-VCSB
		High Wind Co-axial	46DVA-VCH	—	TM-4SVT	—	—
		Extended Co-axial	46DVA-VCE	—	—	—	—
		Co-linear	46DVA-CL33 46DVA-CL34 46DVA-CL33H 46DVA-33P 46DVA-CL34P	—	TM-IVT	559CLT	940033B 940034B 940033HWS 940033RD
	Snorkel, 14” Rise		46DVA-SNK14	4DT-ST14	TM-4ST14	—	DVR6-SNK14
	Snorkel, 36” Rise		46DVA-SNK36	4DT-ST36	TM-4ST16	—	DVR6-SNK36
Vent Adapters		Co-axial-to-Co-linear Adapter	46DVA-GCL 46DVA-GCL34 46DVA-CLAA 46DVA-34CLAA	ADT-AAC	TM-4CAA	1156CLA[4]	DVR6-A34
		Co-linear-to-Co-axial Adapter	46DVA-GK 46DVA-CT 46DVA-CLTA 46DVA-34CLTA	ADT-CTB	TM-4CTA	—	DVF34-A6
		Adapter for Sidewall Terminal MTO-4 or MTO-4F	—	—	—	DVA-M4/7 w/DuraVent venting only	—
Aluminum Flexible Liner		3” or 4” diameter	NOTE: 2-ply liner approved to CAN/ULC S635 suitable for venting gas appliances. As manufactured by Z-Flex, Flexmasters or others.				
			2280 Series	AF3-35L AF4-35L	TM-ALK33 TM-ALK43 TM-ALT33 TM-ALT43	—	952703 952704
Adjustable Pipe Length and Pipe Extensions 4” x 6-5/8”		Galvanized or Black	46DVA-08A 46DVA-08AB (3” to 7”)	—	—	—	DVR6-08A DVR6-08AB
		Galvanized or Black	46DVA-16A 46DVA-16AB (3” to 14-1/2”)	ADT-AJ12 ADT-AJ12B (4” to 10”)	TC-4DLS1 TC-4DLS1B	—	DVR6-16A DVR6-16AB
		Galvanized or Black	46DVA-17TA 46DVA-17TAB (11” to 17”)	ADT-TL14 ADT-TL14B (14” to 22”)	TC-4DLS2 TC-4DLS2B (1-7/8” – 21”)	—	—
		Galvanized or Black	46DVA-24TA 46DVA-24TAB (17” to 24”)	ADT-TL38 ADT-TL38B (38” to 70”)	TC-4DLA30 TC-4DLA30B (16.5” – 29”)	—	—
		Coaxial Flex	46DVA-36FF 46DVA-60FF 46DVA-120FF	—	—	—	—
DV Elbows	30°	Galvanized	46DVA-E30	—	—	—	—
	45°	Galvanized	46DVA-E45 (swivel)	4DT-EL45	TE-4DE45	—	DVR6-E45
		Black	46DVA-E45B (swivel)	4DT-EL45(B)	TE-4DE45B	—	DVR6-E45B
	60°	Galvanized	46DVA-E60	—	—	—	—
	90°	Galvanized	46DVA-E90 (swivel)	4DT-EL90	TE-4DE90	—	DVR6-E90
		Black	46DAV-E90B (swivel)	4DT-EL90(B)	TE-4DE90B	—	DVR6-E90B

Approved Venting Components

Venting Parts Description			Venting Parts Code / availability by Manufacturer				
			DURA-VENT	SELKIRK	ICC EXCEL DIRECT	MILES INDUSTRIES	BDM
Pipes 4" x 6 5/8" (ID x OD)	6" long	Galvanized	46DVA-06	4DT-06	TC-4DL6	—	DVR6-06
		Black	46DVA-06B	4DT-06(B)	TC-4DL6B		DVR6-06B
	7" long	Galvanized	—	—	—	—	—
		Black					
	9" long	Galvanized	46DVA-09	4DT-09	TC-4DL9	—	DVR6-09
		Black	46DVA-09B	4DT-09(B)	TC-4DL9B		DVR6-09B
	12" long	Galvanized	46DVA-12	4DT-12	TC-4DL1	—	DVR6-12
		Black	46DVA-12B	4DT-12(B)	TC-4DL1B		DVR6-12B
	18" long	Galvanized	46DVA-18	4DT-18	—	—	DVR6-18
		Black	46DVA-18B	4DT-18(B)			DVR6-18B
	24" long	Galvanized	46DVA-24	4DT-24	TC-4DL2	—	DVR6-24
		Black	46DVA-24B	4DT-24(B)	TC-4DL2B		DVR6-24B
	36" long	Galvanized	46DVA-36	4DT-36	TC-4DL3	—	DVR6-36
		Black	46DVA-36B	4DT-36(B)	TC-4DL3B		DVR6-36B
	48" long	Galvanized	46DVA-48	4DT-48	TC-4DL4	—	DVR6-48
		Black	46DVA-48B	4DT-48(B)	TC-4DL4B		DVR6-48B
Flashings	Roof Flashing 0/12-6/12		46DVA-F6	4DT-AF6	TF-4FA	—	DVR6-AF012
	Roof Flashing 7/12-12/12		46DVA-F12	4DT-AF12	TF-4FB	—	DVR6-AF712
	Flat Roof Flashing		46DVA-FF	—	TF-4F	—	DVR6-TCF
	Masonry Flashing		—	—	TF-4MF	559FSK	—
	New Siding Flashing		—	—	—	658NSFK	—
Various Venting System Parts	Wall Thimble		46DVA-WT	4DT-WT1	TM-4WT	—	DVR6-WTU
	Storm Collar		46DVA-SC	4DT-SC	TM-SC	—	DVT68-SC
	Decorative Plate		46DVA-DC	—	TM-4TR TM-4TP	—	DVR6-DC
	Ceiling Support	Cathedral	46DVA-CS	4DT-CCS	TM-4SS	—	DVR6-CS
		Regular	—	4DT-CS	—	—	—
	Ceiling Firestop		46DVA-FS	4DT-FS	TM-4RDS TM-CS	—	DVR6-CFS
	Attic Radiation Shield / Firestop		46DVA-IS	ADT-AIS	TM-4AS	—	DVR6-AIS
	Wall Strap		46DVA-WS	4DTWB	TM-WS	—	DVR6-WS
	Vinyl Siding Standoff		46DVA-VSS	4DT-VSS (before siding) 4DT-VSSB (after siding)	TM-VSS	—	DVR6-VSS
	Elbow Strap / Offset Support		46DVA-ES	4DT-OS	TM-OS	—	DVR6-ES
	Terminal Guard		46DVA-WG	—	TM-HTS	845TG	DVR6-SHRD
					TM-RHTS	658TG	

Notes:
1. Follow instructions supplied with each manufacturer's components.
2. Unless otherwise specified, all the parts and assemblies from the above table are to be used with 4" x 6-5/8" pipes.
3. **Do not mix components from different vent manufacturers, except Miles Industries', approved for use with those of other manufacturers.**
4. Miles Industries Valor Co-linear adapter 1156CLA cannot be used with models 1600. Use only with models 1500.

Dimensions & Location

Dimensions

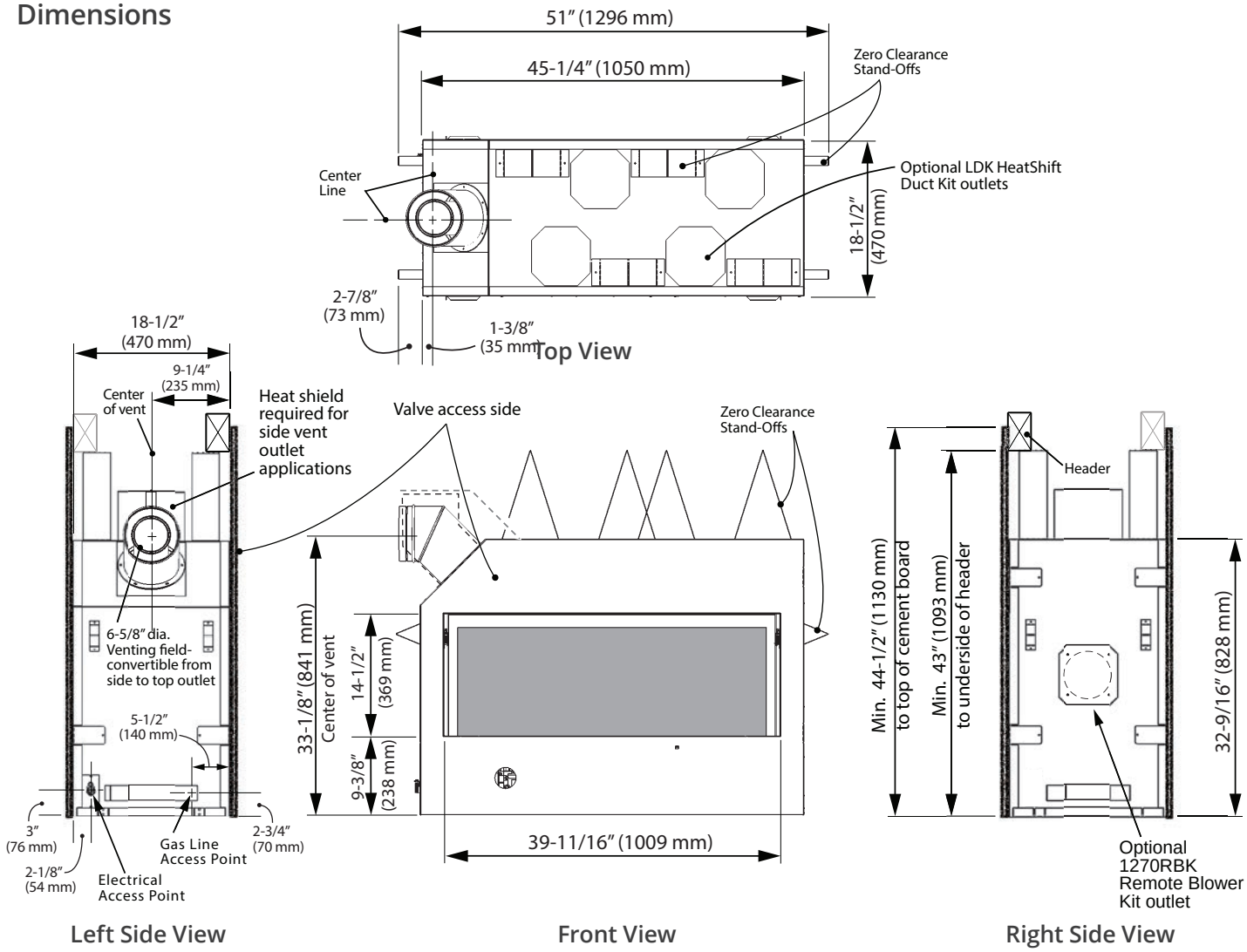

Location

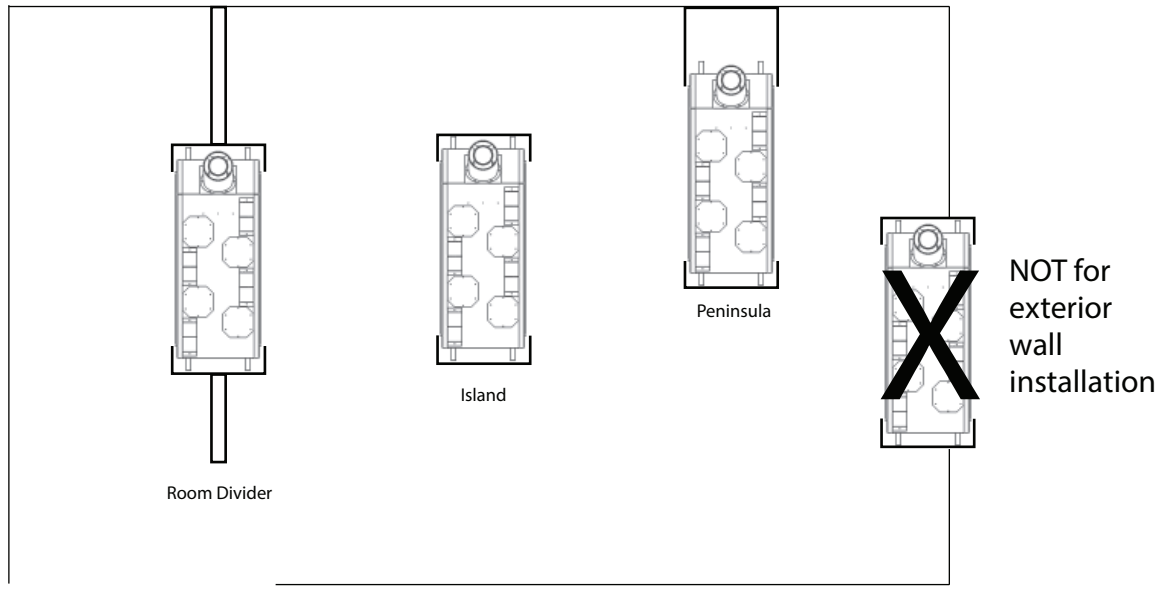

Installation Planning

Caution

Only qualified, license, or trained personnel should install this appliance.

1. YOU NEED TO KNOW FROM THE HOMEOWNER:
   - Will optional HeatShift System* be used;
   - Height of appliance and shelf, if used;
   - Thickness and type of wall finish around appliance;
   - Trim used*;
   - Other optional accessories used (if any);
   - Venting configuration.
2. Unpack the appliance, removing all items packed inside and around it. Recycle the packaging.
3. Check that you have everything, using the Pack Content sheet. Also, check that you have:
   - Fuel bed (packed separately);
   - Liner panels (packed separately);
   - Remote Battery and Wall Switch Kit;
   - HeatShift System components (if used);
   - Gas conversion kit (if necessary);
   - Venting accessories;
   - Electrical accessories (if used).
4. Carefully read the Installer's Checklist included with the fireplace for the installation sequence.

WARNING

***HeatShift System MUST be installed on this appliance when using 1530CIK—Clean Installation Kit!**

WARNING

NO ELECTRICAL CONNECTION ALLOWED for any outdoor installation!

Installation Planning

Overview

Note: This appliance may be installed in outdoor, weather protected environments as defined in the GV60CKO Outdoor Conversion Kit instruction manual.

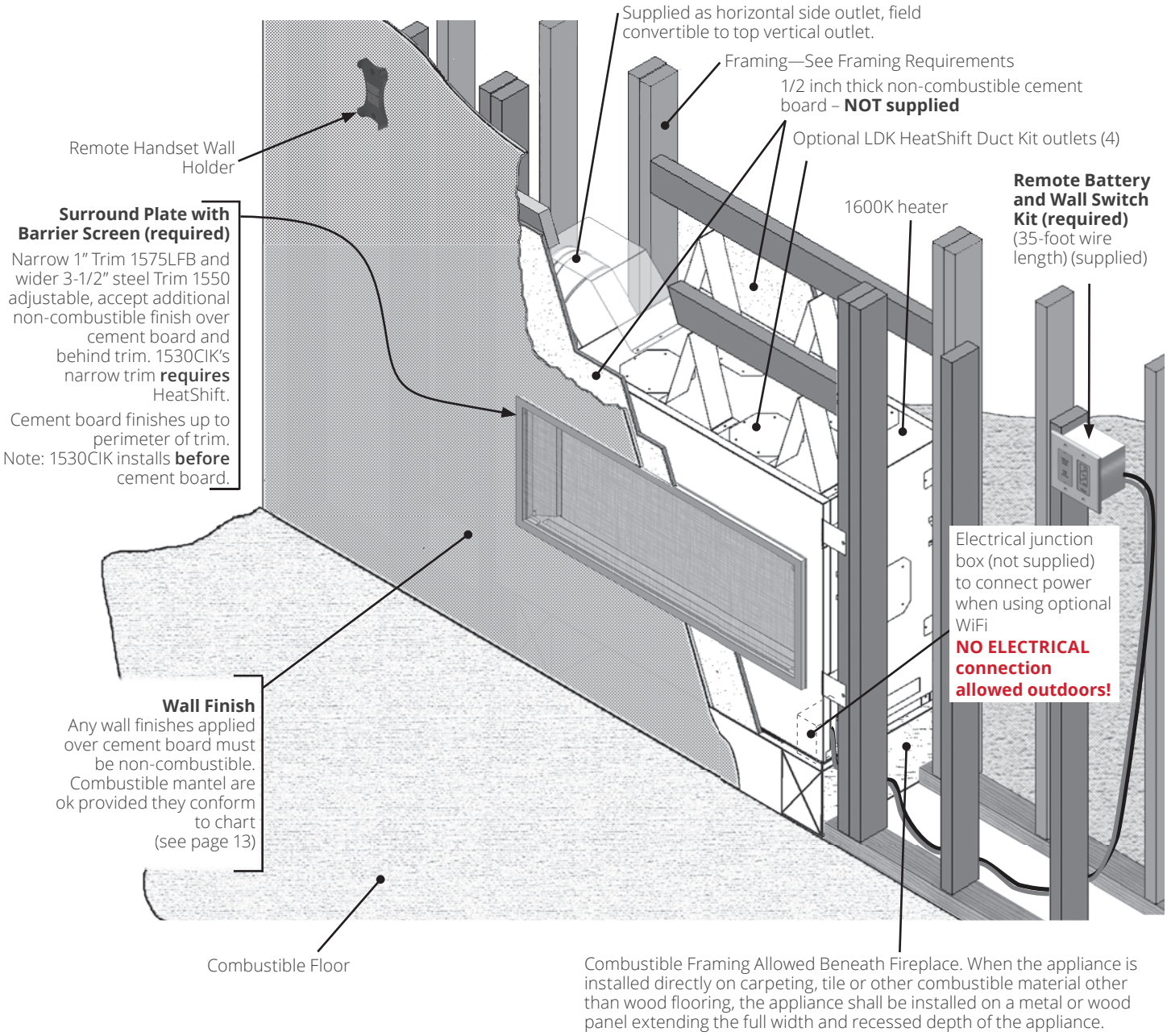

⚠ WARNING

Some materials or items, although safe, may discolor, shrink, warp, crack, peel, and so on because of the heat produced by the fireplace. Avoid placing candles, paintings, photos, and other items sensitive to heat around the fireplace.

⚠ WARNING

HOT WALL SURFACES! The wall directly above the fireplace is constructed of non-combustible materials and, although safe, it may reach temperatures in excess of 200°F (93°C) depending on choice of trims. Do not touch. Finish wall using materials suitable for these temperatures.

Combustible Mantel—Left Side View

NOTE

Use for the optional HeatShift System affects mantel and hearth clearances. See HeatShift section in Appendix D of this manual.

WARNING

HeatShift System MUST be installed on this appliance when using 1530CIK—Clean Installation Kit!

Same dimensions and restrictions apply to both sides of the appliance

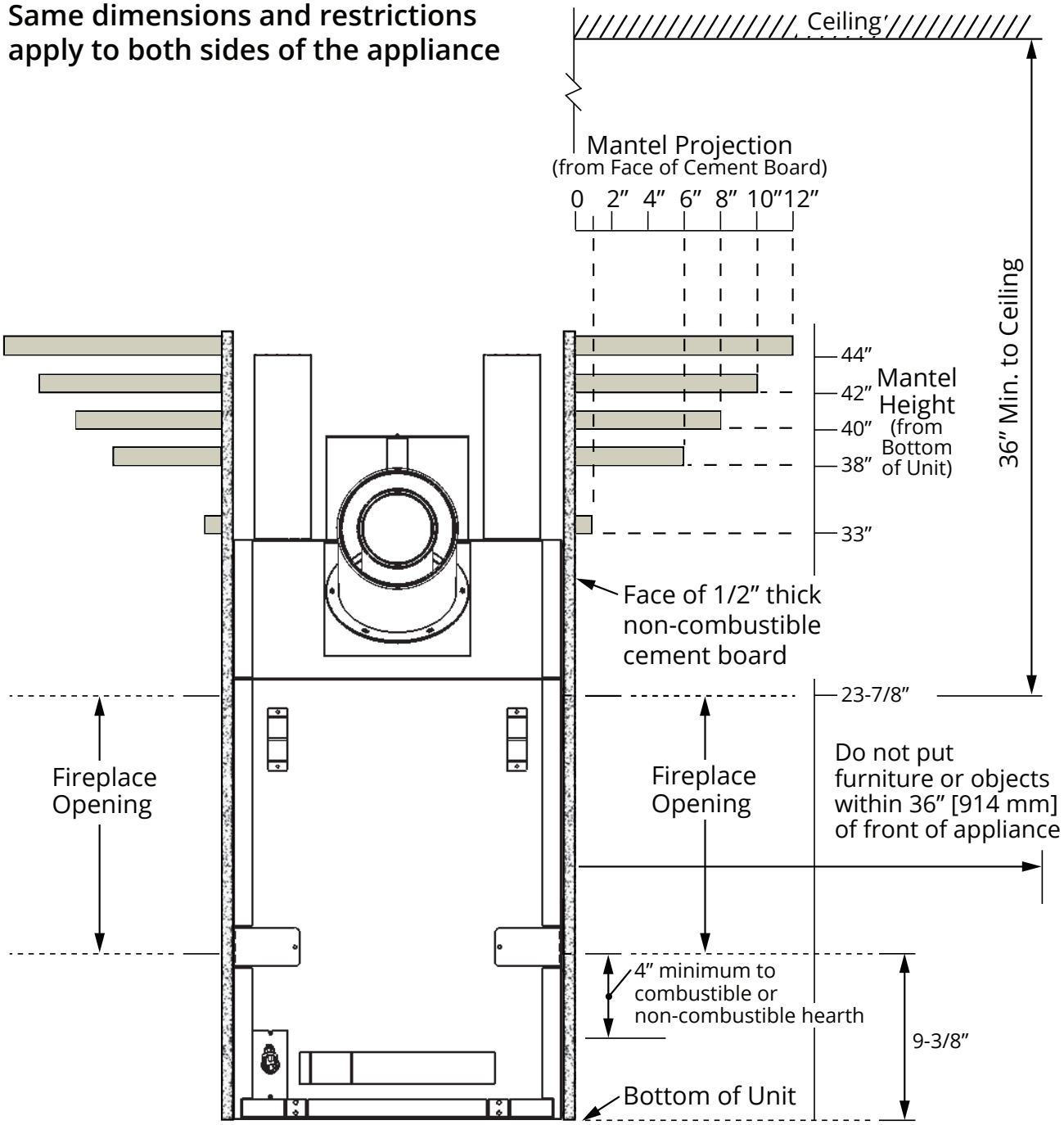

Combustible Sidewall / Mantel Leg—Top View

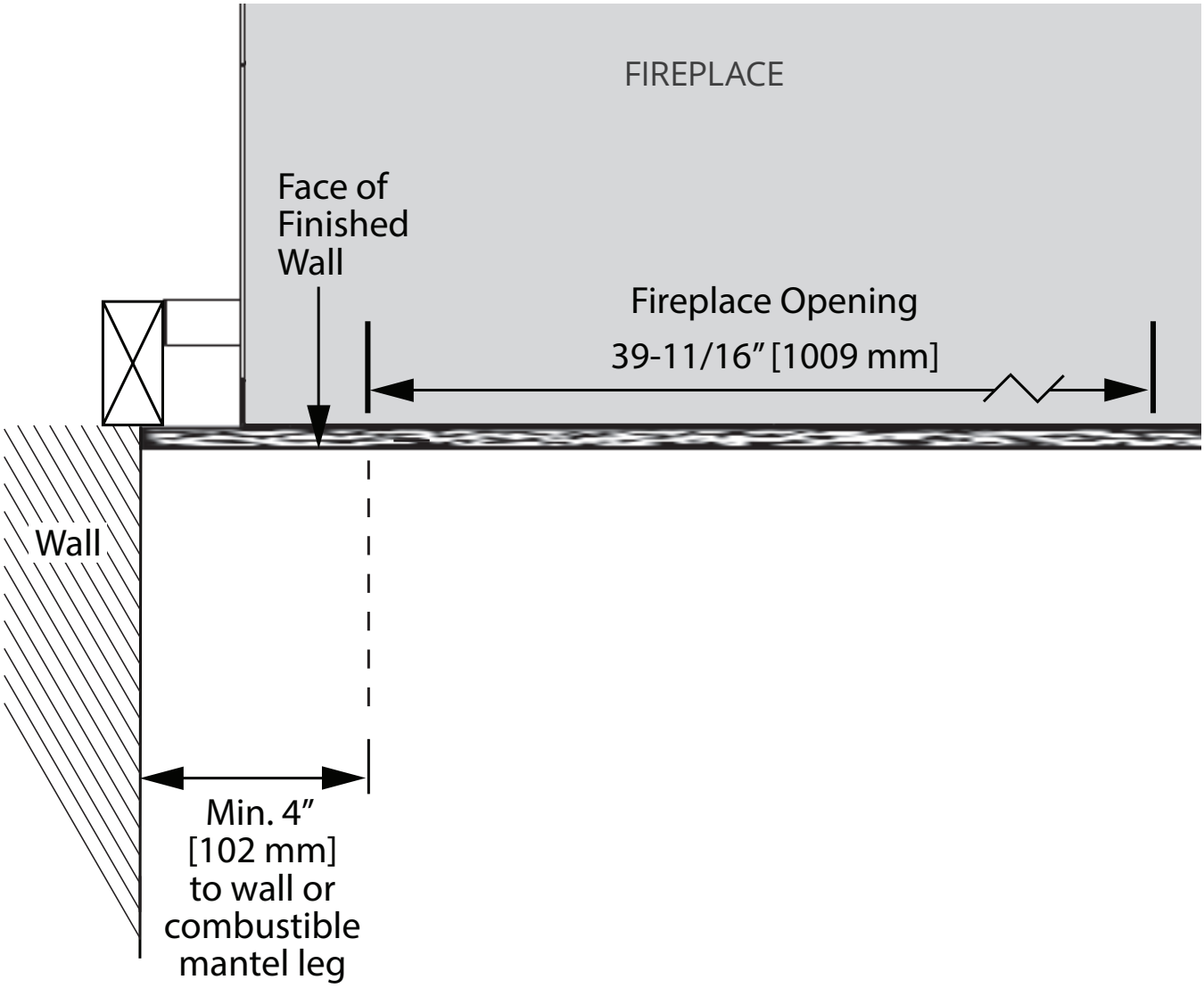

Installation Planning

Framing Dimensions

NOTE
Use fo the optional HeatShift System affects mantel and hearth clearances. See HeatShift section in Appendix D of this manual.

WARNING
HeatShift System MUST be installed on this appliance when using 1530CIK—Clean Installation Kit!

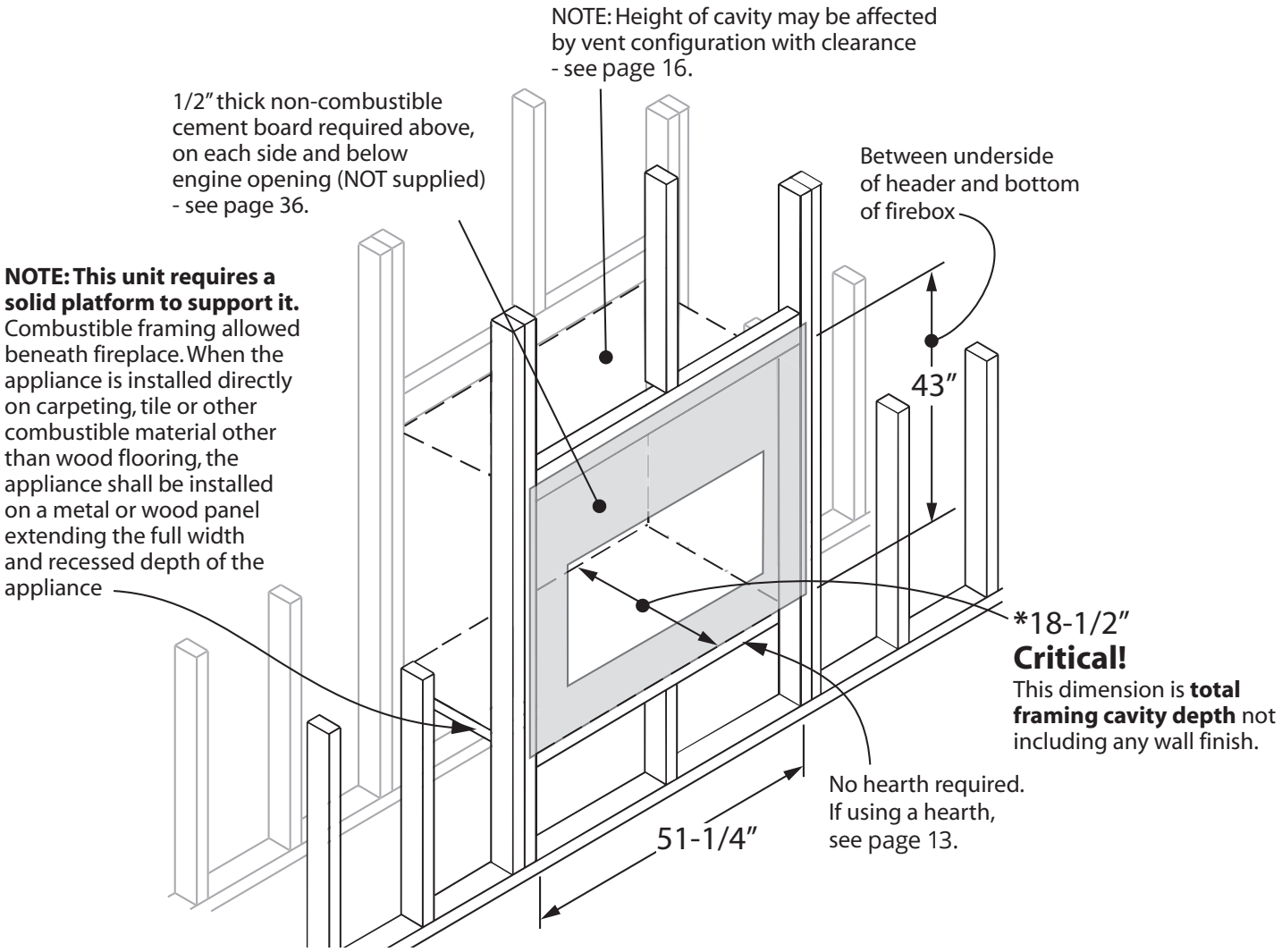

Venting Considerations—Vertical Takeoff

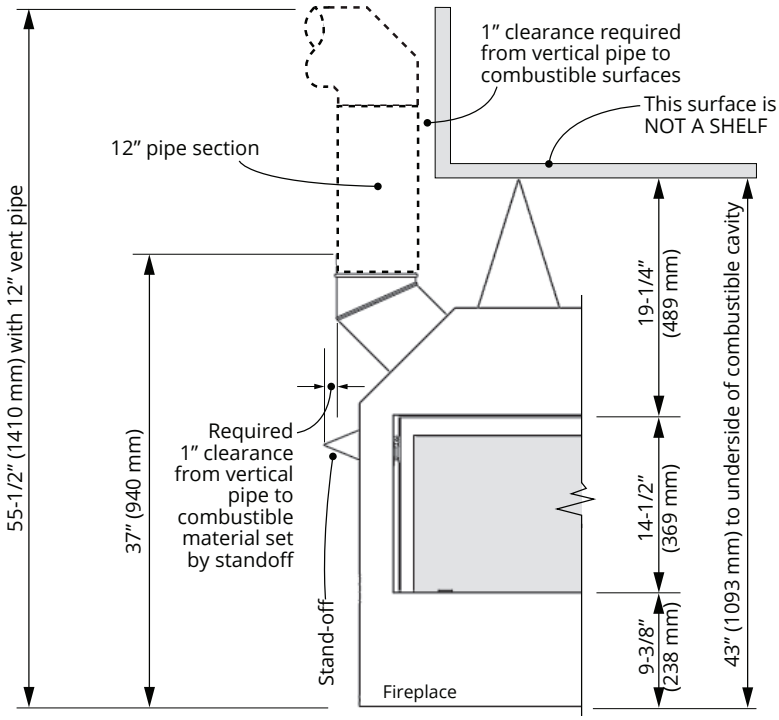

Venting Considerations—Horizontal Takeoff

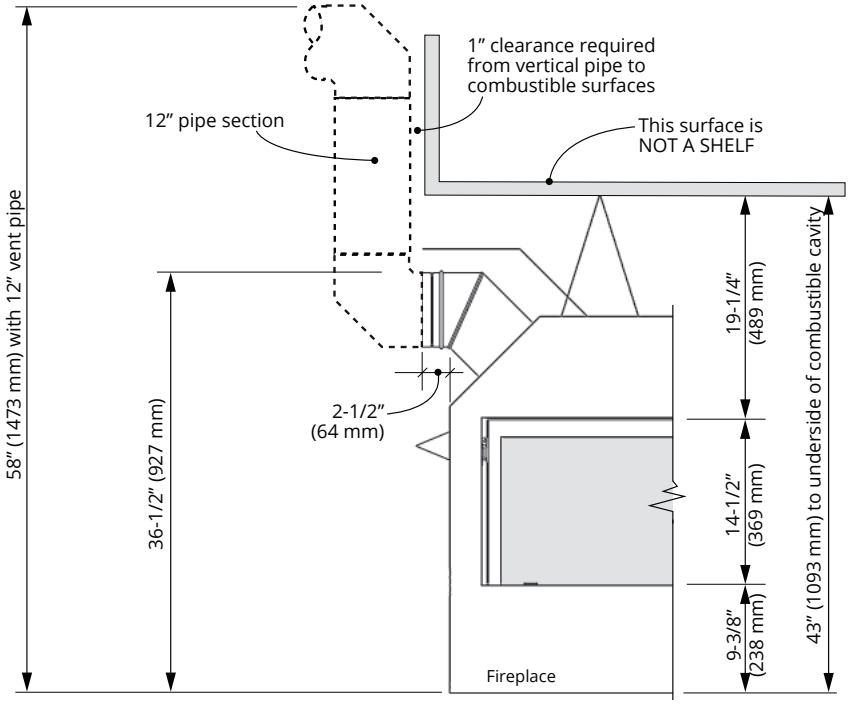

Notes—ALL venting considerations

- Dimensions of venting are approximative and are based on using Dura-Vent elbows. Elbow curve radius dimensions will vary when using other brands and in general are slightly bigger.
- Minimum 12 inches vertical pipe section required right at unit. Refer to venting chart on page 28 for allowable horizontal runs.
- 3 inches to combustibles required above horizontal pipe. Slope pipe upwards 1/4 inch per foot. 1 inch clearance required around sides and bottom of horizontal pipe and around vertical pipe.
- When calculating effective pipe lengths subtract approximately 1-1/2 inch per pipe joint - for example, a 12 inches pipe section will add approximately 10-1/2 inches overall.

⚠ WARNING

If installing with a horizontal surface above the fireplace, do not use this surface as a shelf. Do not place objects above the fireplace as this surface will be hot.

Installation Planning

Material Specifications

Non-Combustible

Material which will not ignite and burn. Such materials are those consisting entirely of steel, iron, brick, tile, concrete, slate, glass or plasters, or any combination thereof.

Materials that are reported as passing ASTM E 136, Standard Test Method for Behavior of Materials in a Vertical Tube Furnace at 750°C shall be considered non-combustible materials.

Combustible

Materials made of or surfaced with wood, compressed paper, plant fibers, plastics, or other material that can ignite and burn, whether flame proofed or not, or plastered or unplastered shall be considered combustible materials.

Non-Combustible Cement Board

The L1 See Thru Linear fireplace requires a 1/2" (13 mm) thick non-combustible cement board to be used as a wall surface immediately surrounding the unit's opening—see diagram for minimum coverage.

Extending the cement board well beyond the minimum shown will help avoid cracking due to differential expansion of materials.

Pre-drill cement board with oversized holes and do not over-tighten screws to avoid cracking due to heat expansion.

Standard gypsum wall board may be used beyond the perimeter of the cement board.

Minimum Cement Board Dimensions

Minimum coverage area of non-combustible cement board.
Any wall finish applied to shaded area must be non-combustible.

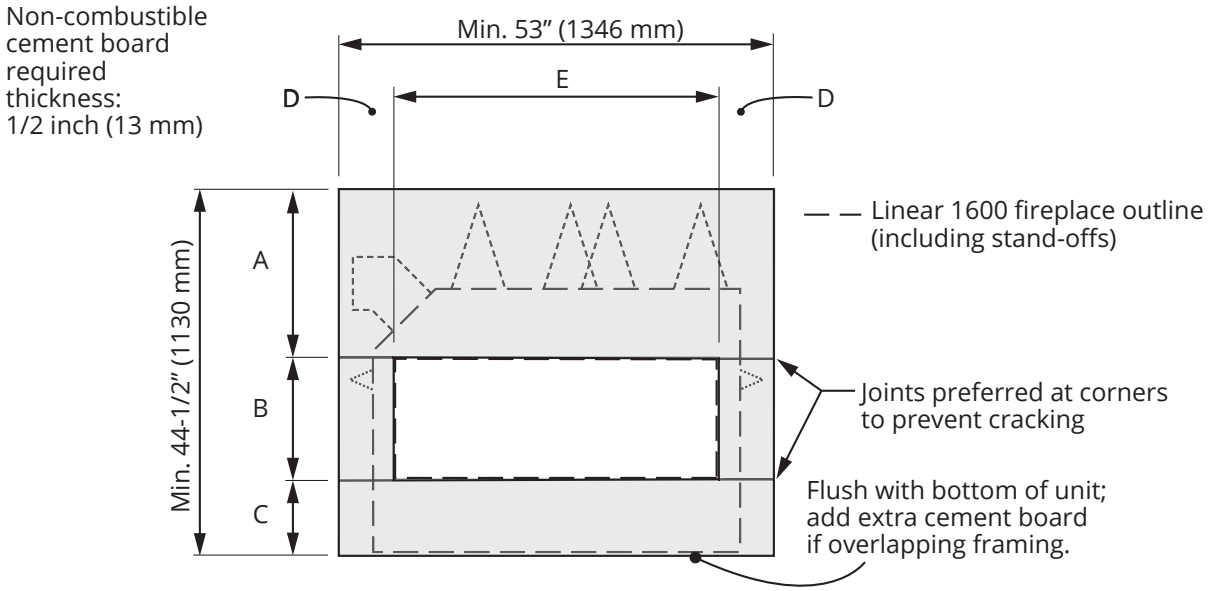

inches [mm]	With 1550 or 1575 trims	with 1530CIK kit
A	Min. 20-1/2 [521]	Min. 20-1/8 [511]
B	14-3/4 [375]	15-13/16 [401]
C	Min. 9-1/4 [235]	Min. 8-9/16 [218]
D	Min. 6-1/2 [165]	Min. 6 [153]
E	Min. 40 [1016]	Min. 41 [1041]

Installation Planning

Non-Combustible Finishing Over Cement Board

Additional non-combustible material such as tile, etc., may be applied over top of the cement board or you may choose to leave it finished clean with no tile, etc.

Be aware that a trim is always required on the front and rear of the unit. Finish **should not cover** the trims.

1575 and 1550 Trims

Only the 1575 and 1550 style trims will accept tile, etc. tucked behind them (up to 1/2" thick for the 1575 and up to 1 inch thick for the 1550).

1530 Trim

1530 trim must be installed **BEFORE** cement board. Cement board and finishes are applied to the perimeter of the trim frame. Cement board and finish **CANNOT** be tucked under this trim.

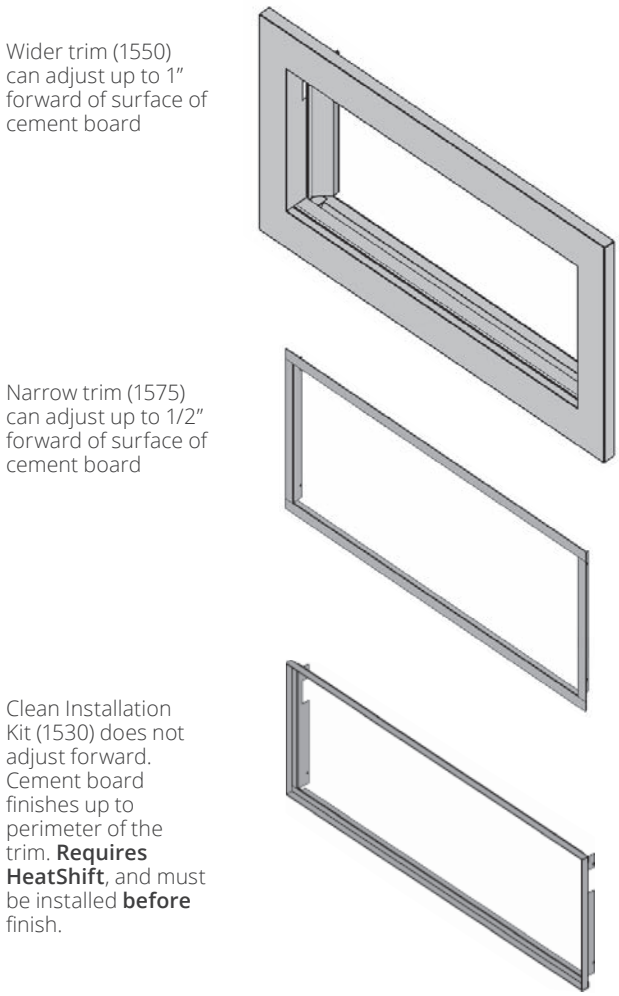

Avoiding Cracking Wall Finishes

We recommend installing the optional LDK HeatShift Duct Kit to reduce the wall temperatures and minimize the possibility of cracking wall finishes.

WARNING

HeatShift System MUST be installed on this appliance when using 1530CIK—Clean Installation Kit!

If a clean finish with no tile, etc. is desired, joints in the cement board and the transition to gypsum board will require special attention if future cracking is to be controlled. Be aware that temperatures on the non-combustible wall surface above the appliance can exceed 200°F (93°C).

Below are some tips on how to best avoid any cracking:

- Allow materials to dry thoroughly before finishing the wall. Cement board has the ability to absorb up to 30 percent of its weight in water and may shrink as much as 1/8" over a 48" length when drying from a saturated condition. Running the fireplace for an extended period before final finishing will help drive out moisture.
- Always pre-drill screw holes through cement board and use screws with self-milling head.
- Always use mesh tape over joints.
- Always stagger joints in wall board.
- Behind joints, double up studs or use studs "on the flat" to add extra support to the joint. Adhesive on the backside of wall board behind any joints can help control differential movement.
- Use multiple, thinner coats of joint compound and allow to dry thoroughly between coats.
- Ensure framing materials are dry.
- After finishing the wall, introduce heat gradually to slowly dry any excess moisture rather than drying too fast.
- Avoid notching cement board or tiles around corners of window opening and instead provide a joint that intersects the corner.
- Avoid using lage one-piece slab of material with a cut-out in the middle as a surround for the fireplace. Expansion above the opening will cause cracking at inside corners. Provide a joint that intersects the inside corner to avoid cracking.

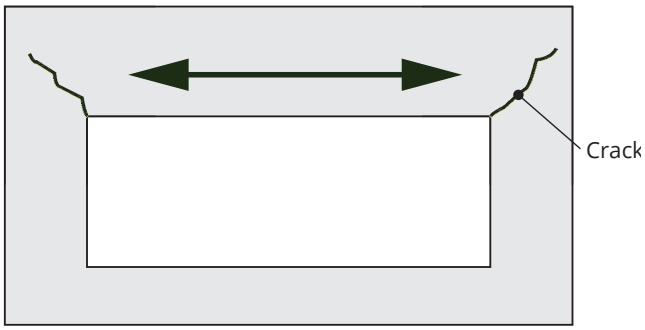

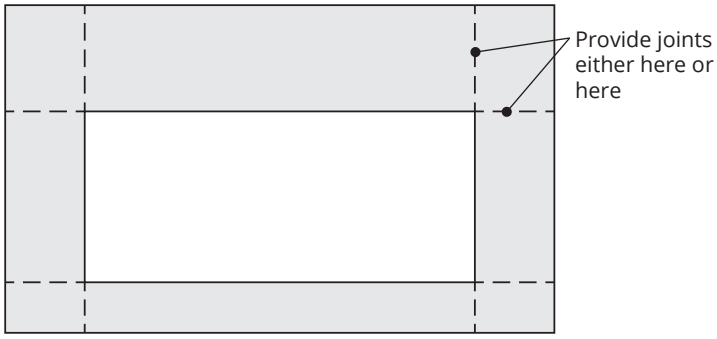

Top or Rear Outlet

This unit is supplied with a top vent outlet which can be field-converted to a rear vent outlet. See *Appliance Preparation* section for more information.

Vent Material

This unit is approved for installation using 4 x 6-5/8 inches co-axial direct vent pipe and accessories as listed in the *Approved Venting Components* section on pages 61–62 of this manual. Follow the installation instructions supplied with the individual venting accessories.

This unit may also be converted to co-linear (2 x 3 in) venting for use in solid-fuel burning fireplaces and chimneys using adapters and accessories—see list in the *Approved Venting Components* section on pages 61–62 of this manual.

Vent Sealing

Seal all **outer** coaxial pipe and elbow joints, including sectioned **outer** elbow joints, using high quality, high temperature 2 inch wide self-adhesive aluminum foil tape (Nashua-322-2 brand or similar). Wrap the tape completely around all outer joints and press firmly to seal.

A high temperature black silicone sealant may be used in the **outer** joints as a substitute to foil tape.

Ensure all the pipe joints have a minimum of 1 ¼ inch overlap.

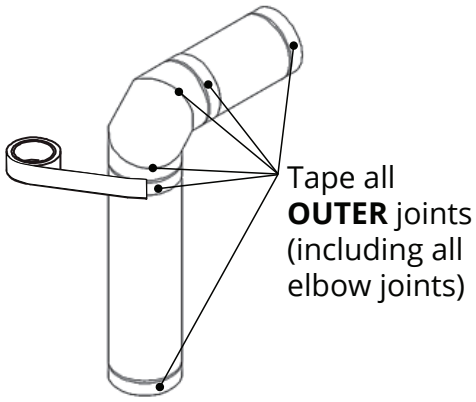

Wall Thickness

The appliance vent is suitable for penetrating a combustible wall assembly up to 8 inches in thickness. A non-combustible wall can be of any thickness up to the maximum horizontal run of vent pipe allowed for the particular installation.

Framing Vent in Combustible Walls & Ceilings

When penetrating through combustible walls and ceilings, frame a minimum of 10 in x 10 in opening and ensure that the insulation is kept clear of the vent pipe using either a wall thimble or an attic insulation shield. Follow the installation instructions supplied with the individual venting components.

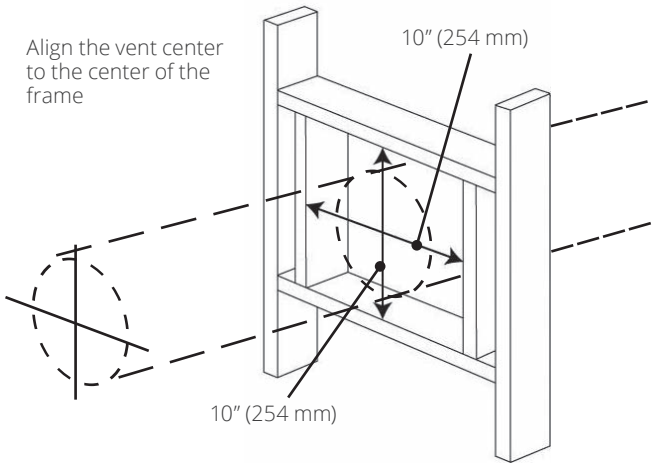

Important Installer Notice – Weather Sealing & Vapor Barriers

It is the installer's responsibility to ensure that vent installations through exterior walls are caulked and weatherproofed in such a manner as to:

- Prevent rain water from entering the wall from the weather side by adequately caulking the outer vent plate to the exterior wall surface.
- Prevent moisture inside the home from penetrating into the wall structure by ensuring the inside wall plate is adequately sealed to the inside vapor barrier.
- Prevent rain water and moisture from entering the walls by sealing the joints between the outer vent tube and the inner and outer wall plates.

We recommend the use of a high quality polyurethane sealant.

All horizontal pipe runs must be graded 1/4 inch per foot upwards in the direction of the exhaust flow. The final pipe length, when terminating through the wall may be graded downwards slightly to prevent water migration.

Typical Co-axial Venting Components

IMPORTANT

Provide support for vertical pipe runs, particularly offsets. Do not rely on the appliance for support of long vertical pipe runs. Horizontal pipe runs should be supported every 4 feet using strapping.

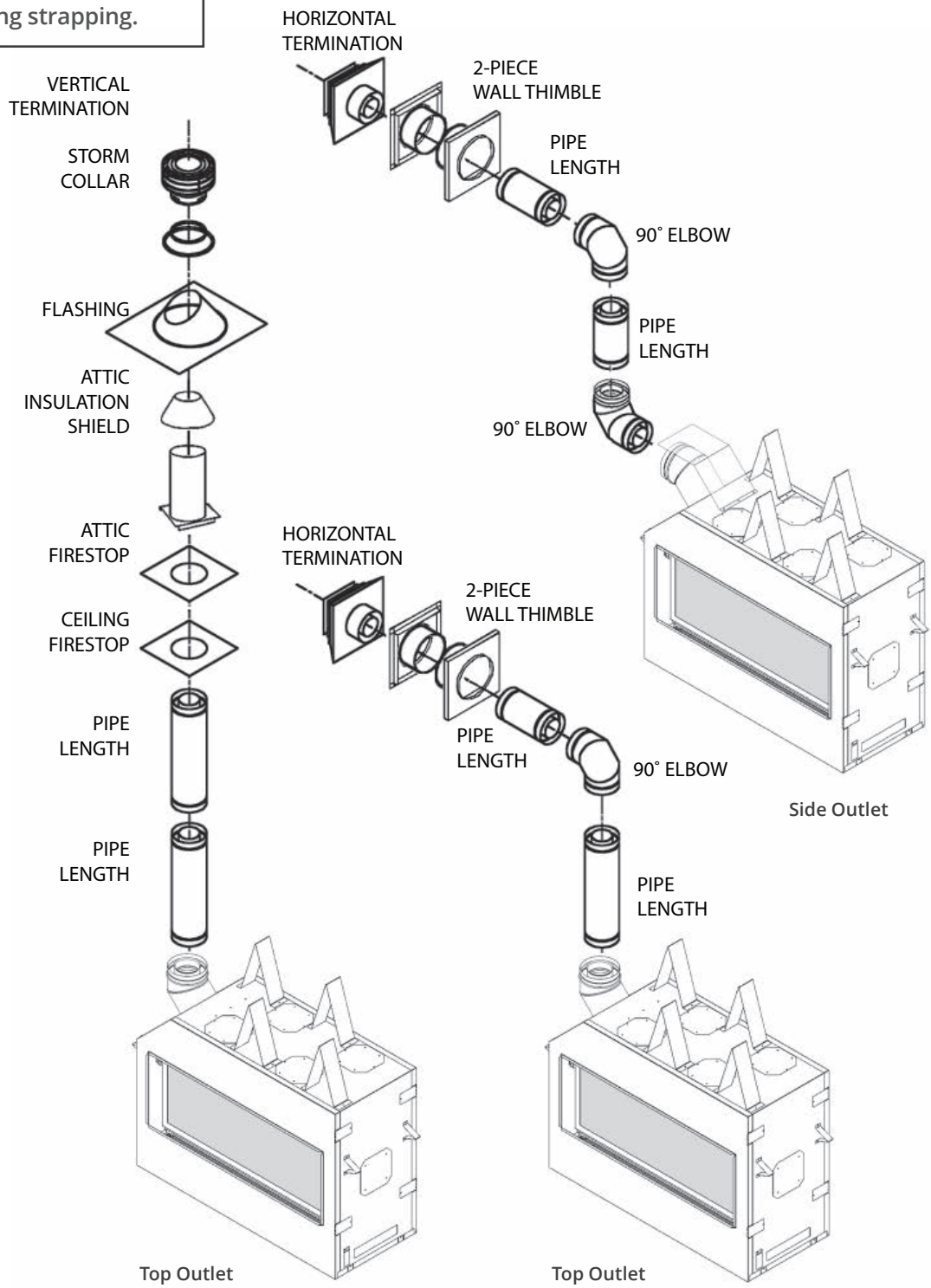

How to Read the Venting Chart

The chart below applies to co-axial roof or wall termination.

1. Minimum 12 inch vertical pipe section required right at unit.
2. The total length of the vent pipe cannot exceed 40 feet.
3. The minimum vertical height with roof termination is 6 feet.
4. Any combination of rise and run can be used as long as they are within the allowable limits shown on the chart below.
5. A maximum of 4 x 90 degrees elbows—or equivalent (2 x 45 degrees = 90 degrees)—can be used. Excludes the 45 degrees take-off elbow shipped with the appliance.
6. Each 90 degrees elbow installed on the horizontal plane is equivalent to a 3 feet horizontal pipe; therefore, 3 feet must be subtracted from allowable horizontal run. (45 degrees elbow is equivalent to 18 inches horizontal pipe.)
7. All horizontal pipe runs must be graded 1/4 inch per foot upwards in the direction of the exhaust flow. The final pipe length, when terminating through the wall may be graded downwards slightly to prevent water migration.
8. A restrictor adjustment is required for most installations having a vertical rise—see next section. **Note:** The restrictor is shipped installed at the exhaust exit of the firebox.

Venting Chart

4 x 90° ELBOWS MAXIMUM (or equivalent)

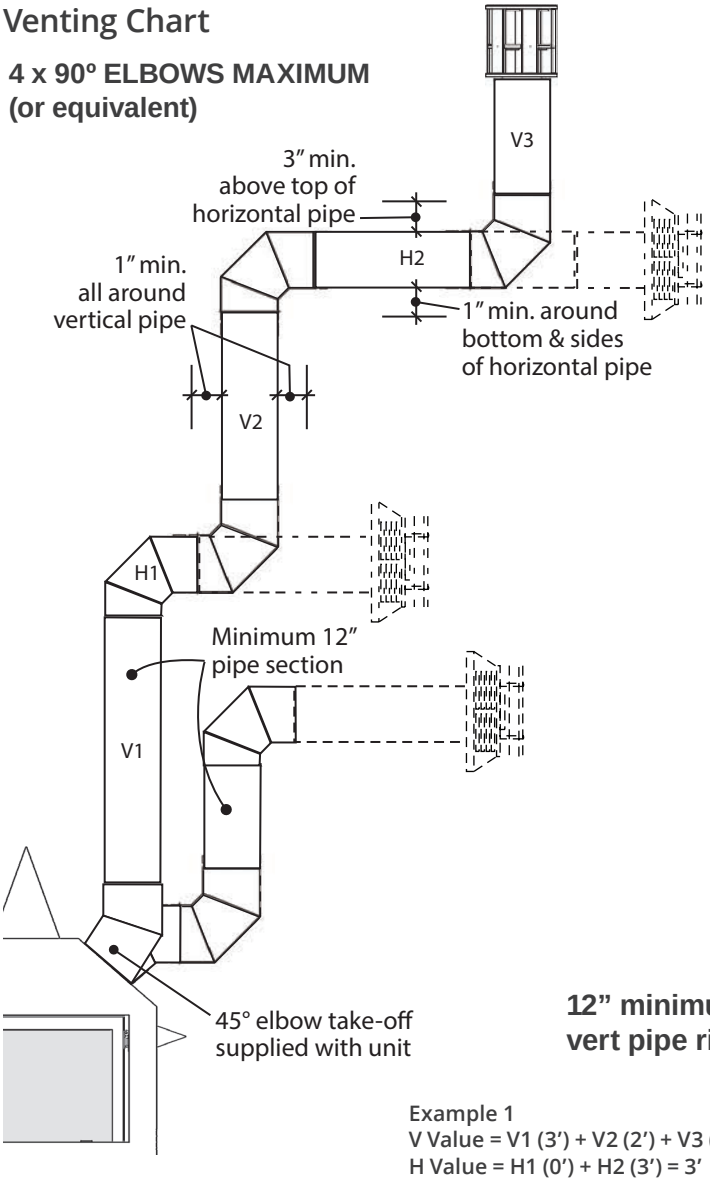

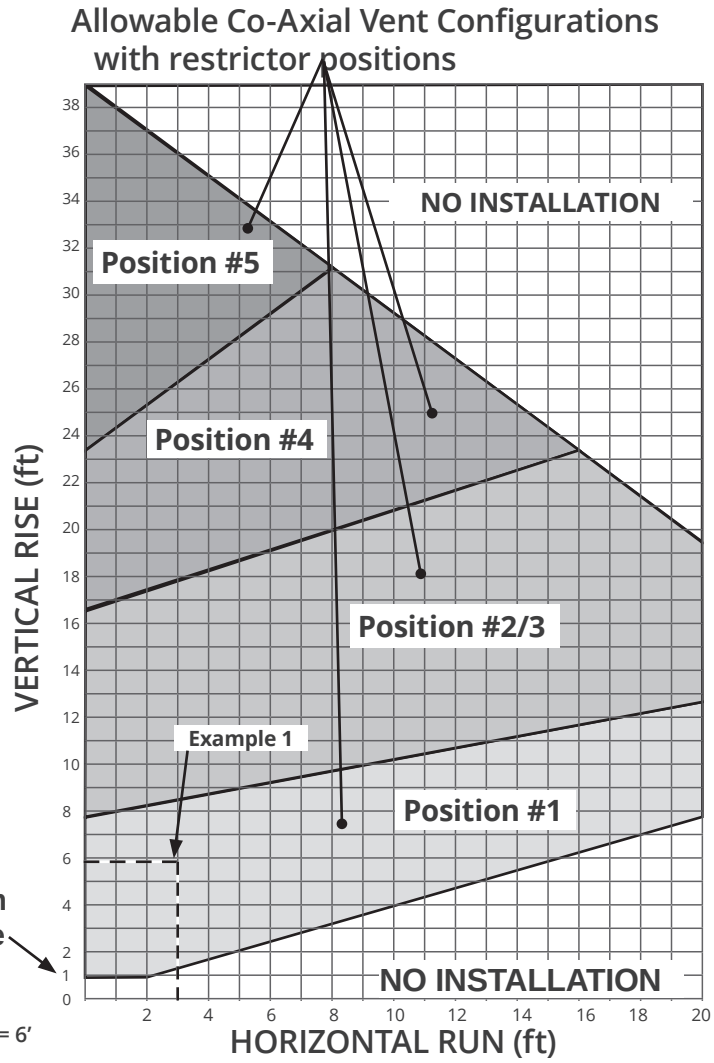

Example 1
V Value = V1 (3’) + V2 (2’) + V3 (1’)= 6’
H Value = H1 (0’) + H2 (3’) = 3’
Restrictor position # 1 required

Restrictor Settings

The restrictor is located in the roof of the firebox hidden above the top liner panel. Adjust the restrictor before installation of the top liner panel. Should subsequent adjustment be required, you will need to remove the top liner panel—see page 43.

ALL INSTALLATIONS REQUIRE A RESTRICTOR for improved flame picture and performance. This unit is supplied with a pre-fitted restrictor having five different positions or settings. The restrictor is shipped mounted at the maximum open position which is used for rear venting with no vertical rise. The level of restriction required depends on the vertical rise in the venting system and, to a lesser degree, the horizontal run and number of elbows.

The amount of restriction is based on laboratory tests. The ideal restrictor position may vary slightly, especially when the vent pipe length is near the limits of the acceptable configurations for each type of restrictor.

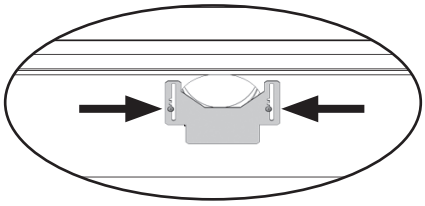

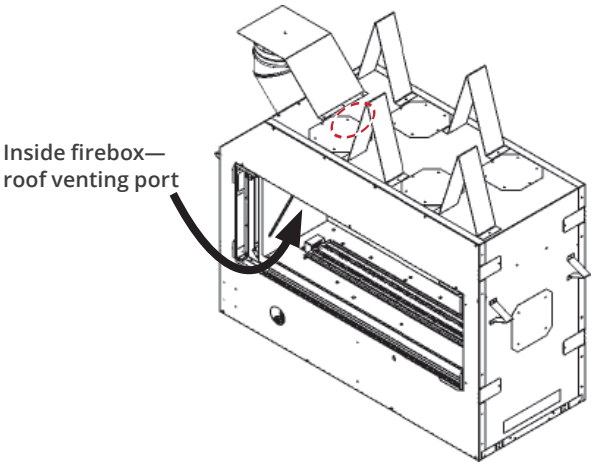

The chart on the previous page shows the vent restrictor required relative to the length of the vent pipe.

To set the restrictor position:

1. Establish the required position of the restrictor looking up the venting table on the previous page.
2. Release the screws (2) on each side of the restrictor already installed **on the firebox roof port**.
3. Slide the restrictor in the required position.
4. Tighten the screws.

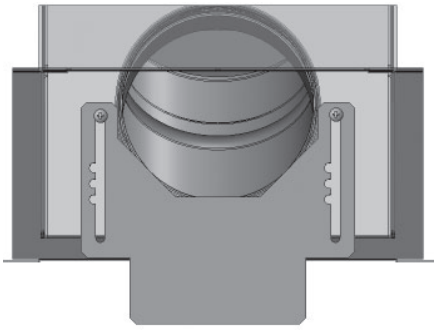

Position #1

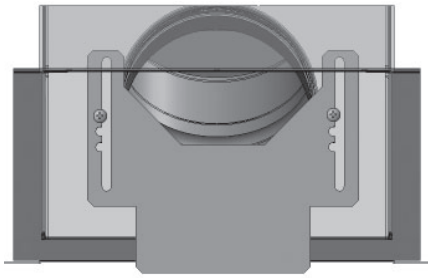

Position #2

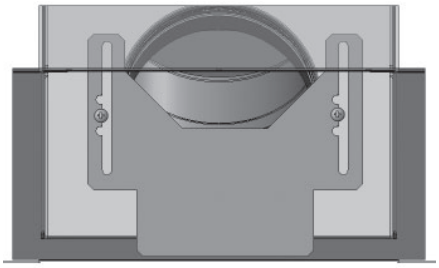

Position #3

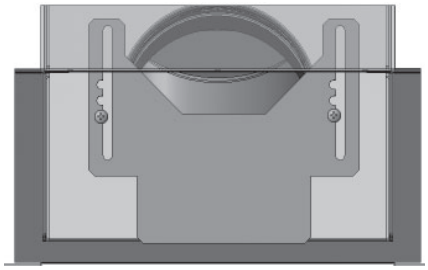

Position #4

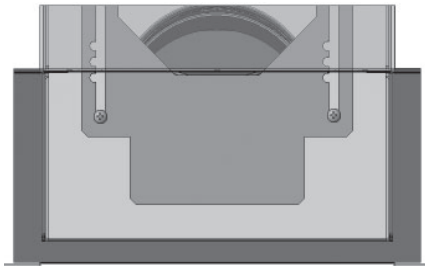

Position #5

Horizontal Vent Termination Location

- The vent terminal must be located on an outside wall or through the roof.
- This direct vent appliance is designed to operate when an undisturbed airflow hits the outside vent terminal from any direction.
- The minimum clearances from this terminal that must be maintained when located on an outside wall are shown in figure below. Any reduction in these clearances could result in a disruption of the airflow or a safety hazard. Local codes or regulations may require greater clearances.
- The vent terminal must not be recessed into a wall or siding.
- The vent terminal should be positioned where any snowdrifts will not cover it.
- Sidewall vent terminations require a terminal guard such as 658TG or 845TG when accessible—within 7′ of ground.

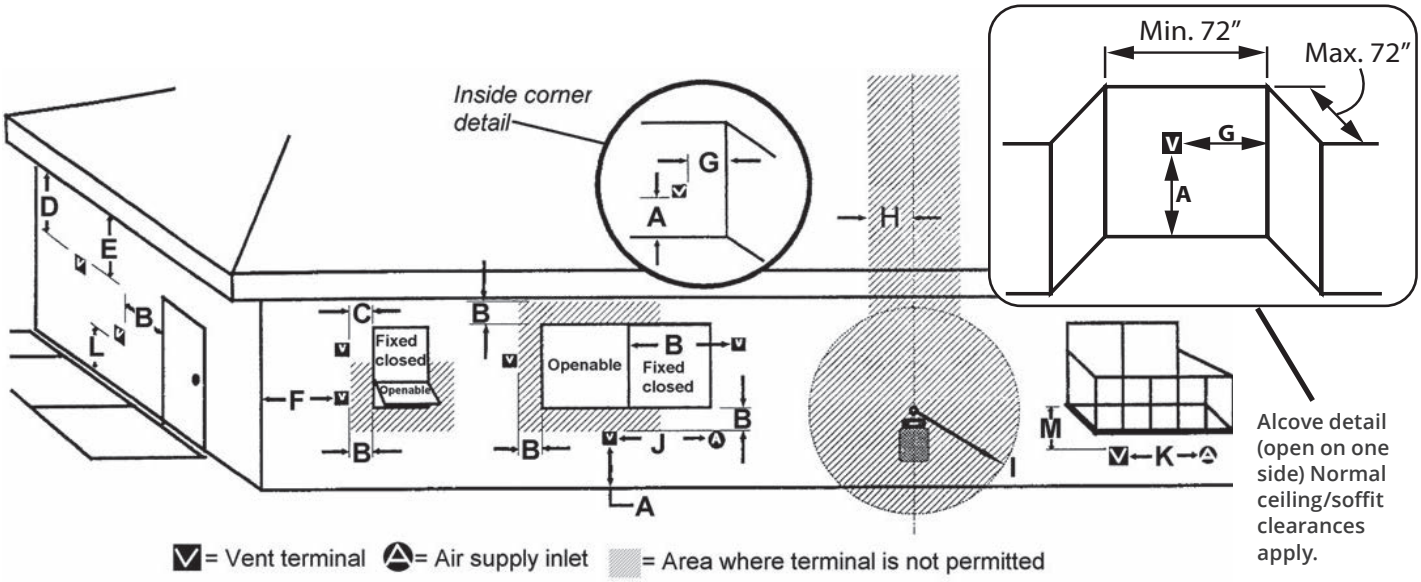

Alcove detail (open on one side) Normal ceiling/soffit clearances apply.

KEY	VENT TERMINAL LOCATIONS - MINIMUM DISTANCES	MINIMUM CLEARANCE	
		Inches	Cm
A	Clearance above grade, verandah, porch, deck or balcony	12	30
B	Clearance to window or door that may be opened	12	30
C	Clearance to permanently closed window (recommended to prevent condensation on window)	12	30
D	Vertical clearance to ventilated soffit located above the terminal within a horizontal distance of 2 feet (60 cm) from the center-line of the terminal	18	46
E	Clearance to unventilated soffit	12	30
F	Clearance to outside corner (measured from the center of vent)	12	30
G	Clearance to inside corner (measured from the center of vent)	12	30
H	Horizontal clearance to center-line of meter/regulator assembly located within 15 feet (4.6 m) below the terminal	36	90
I	Clearance to service regulator vent outlet	36	90
J	Clearance to non-mechanical air supply inlet to the building or the combustion air inlet to any other appliance	12	30
K	Clearance to a mechanical air supply inlet	72	180
L	Clearance above paved sidewalk or a paved driveway located on public property ***Note:*** *A vent must not terminate directly above a sidewalk or paved driveway, which is located between two single-family dwellings and serves both dwellings.* ***THIS DOES NOT APPLY to direct vent, non-consdensing appliances in the Province of Ontario.***	84	210
M	Clearance under a verandah, porch, deck or balcony *Only permitted if veranda, porch, deck or balcony is fully open on a minimum of 2 sides beneath the floor*	12	30

Note: Local codes and regulations may require different clearances.

Vertical Vent Termination

Roof Pitch	Minimum "H" (feet)
Flat to 7/12	1'
Over 7/12 to 8/12	1.5'
Over 8/12 to 9/12	2'
Over 9/12 to 10/12	2.5'
Over 10/12 to 11/12	3.25'
Over 11/12 to 12/12	4'
Over 12/12 to 14/12	5'

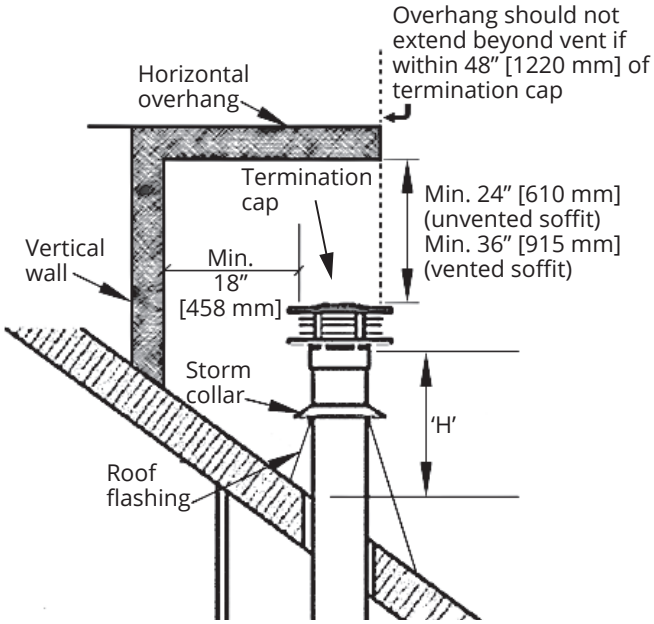

Installation Into Existing Adjacent Chimney

The appliance can be adapted to co-linear applications using an existing chimney. The appliance must not be connected to a chimney flue serving a separate solid-fuel burning appliance.

Required accessories:

- Co-axial to co-linear adapter 46DVA-GCL, 46DVA-CLAA or equivalent;
- 2 lengths of 2-ply, flexible chimney liner approved for venting gas appliances: 1 x 3-inch diameter for air inlet and 1 x 3-inch diameter for exhaust;
- Co-linear termination kit 3 x 3 and flashing or co-linear to co-axial adapter and either high wind vertical vent terminal cap or a low profile vertical termination.

Rules for Co-Linear Venting

- Maximum 40 feet vertical pipe
- Minimum 10 feet vertical
- Maximum offset 8 feet with liners at minimum 45 degrees from horizontal plane
- Restrictor: Not required when using co-linear venting.

NOTE

This appliance must be completely framed and maintain clearances to combustibles as shown in this manual.

Standoffs are required to maintain clearances to combustible for the part of the appliance outside a non-combustible cavity.

Existing Fireplace Preparation

A few points must be considered before inserting the L1 into an existing fireplace cavity. Generally, no modifications are allowed to the existing fireplace that will compromise the integrity of the existing fireplace.

Have the chimney swept and the fireplace cavity including ash dumps and clean-outs cleaned before installing the L1 heater and vent liners. Any creosote or soot residue remaining in the fireplace cavity chimney or clean-out may cause odors or stains once the L1 insert is installed. Consult with chimney sweep for information on how best to clean.

Attach the conversion plate/label "This fireplace has been converted..." supplied with the vent adapter **to the existing fireplace** using screws or other mechanical means and store any removed parts in back of the existing fireplace for future use.

NOTE

Co-linear flexible aluminum venting liners should be professionally inspected periodically for corrosion and damage and replaced when necessary. If the installation does not allow for future inspection or replacement of the flexible aluminum liners, then stainless steel vent liners should be used.

NOTE

Co-linear portion of vent system may only be installed within a solid-fuel burning fireplace and chimney.

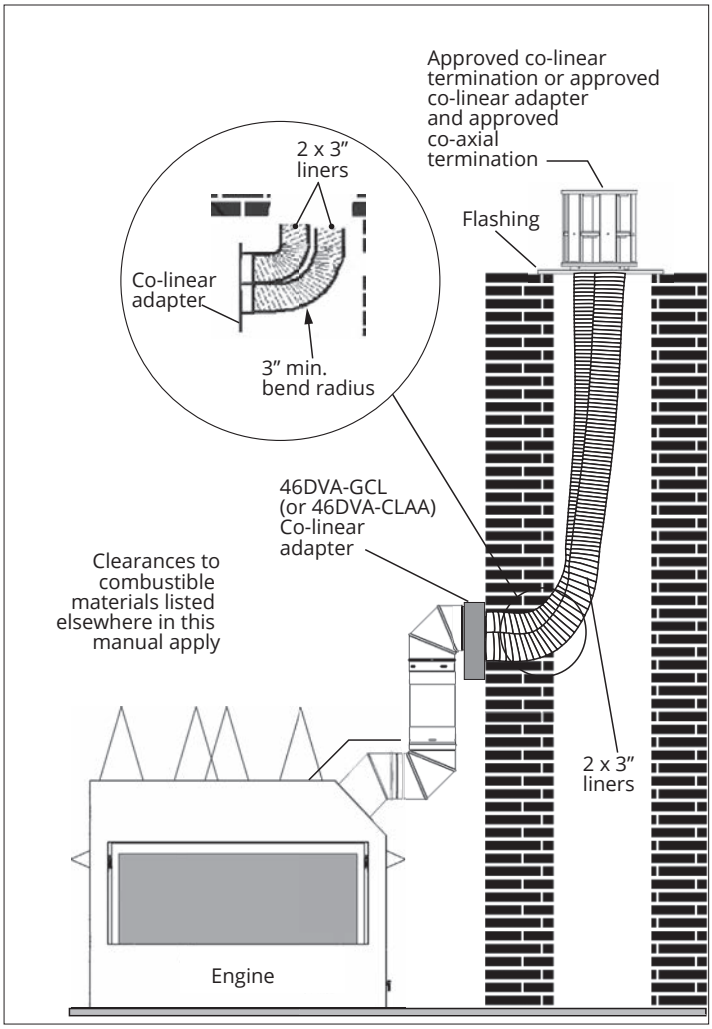

Example of Co-linear Conversion Accessories

Examples of Co-axial to Co-linear Appliance Adapters

46DVA-GCL

46DVA-CLAA

Examples of Co-linear Terminal Configurations

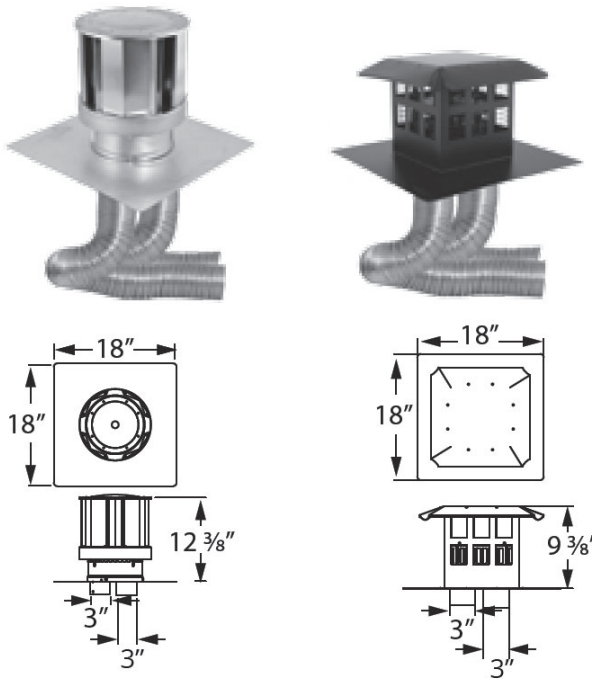

Co-linear Termination Kits

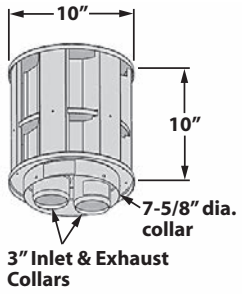

Co-Linear Terminal (typical)

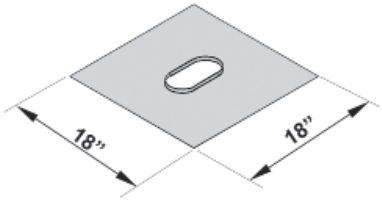

Flashing Kit

Alternate Co-linear to Co-axial Conversion at Terminal

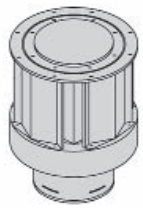

Co-axial Terminal Cap

With...

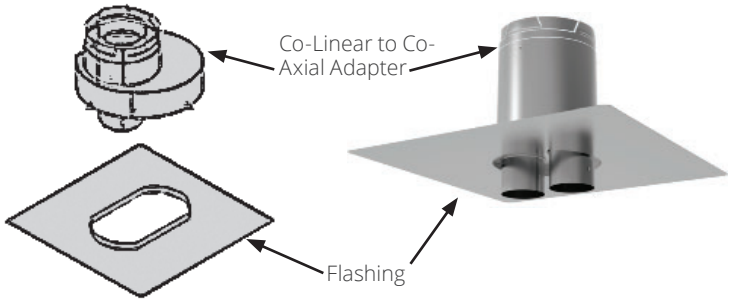

Unpack Appliance

Beware of sharp edges! Wear gloves!

1. Remove the cardboard wrapping and the wood pallet from the appliance and recycle.
2. Unpack any loose items from around the appliance.
3. Remove the window and set aside in a safe place to avoid damage—see page 30.
4. **Verify that you have all the components required for the installation, *including:***
   - **approved cement board;**
   - **liners and fuel bed (in separate cartons);**
   - **trim kit with barrier screen;**
   - **venting components and accessories;**
   - **optional HeatShift system if used;**
   - **electrical components if installing optional fan or WiFi.**

Fit Standoffs

1. The four **top** standoffs are supplied flat on the firebox top and fixed at one end. Bend them as shown and fix the loose end to the top of the firebox.

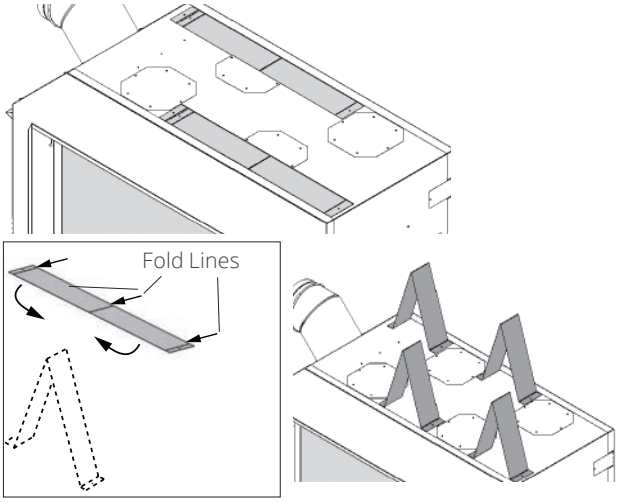

2. The four **side** stand-offs are supplied flat. Bend them and fix them to the sides of the firebox as indicated with the screws supplied (2 stand-offs per side).

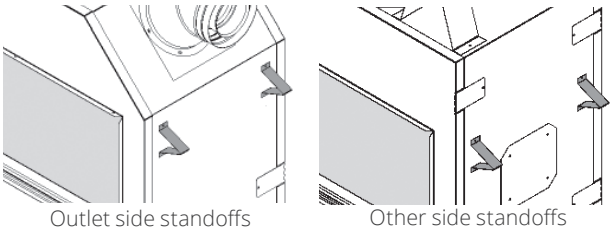

Outlet side standoffs Other side standoffs

Convert from Top to Rear Outlet (if required)

This unit is supplied with a top vent outlet which can be field-converted to a rear vent outlet.
Please note that the rear outlet requires the installation of the heat shield on top of the heater case as indicated.

1. Remove the top outlet collar (6 screws).

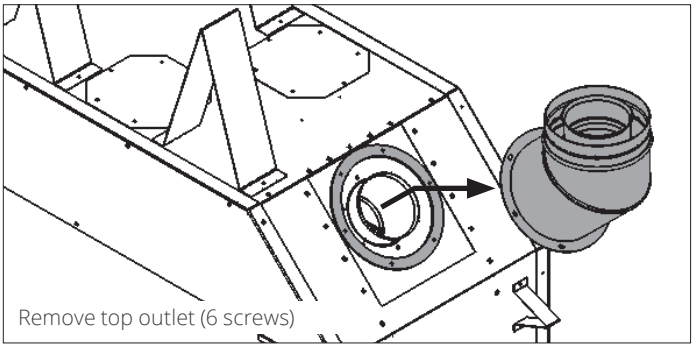

2. Swivel the collar and install as a rear outlet (6 screws).
3. Reinstall the heat shield to the top of the appliance case (3 screws).

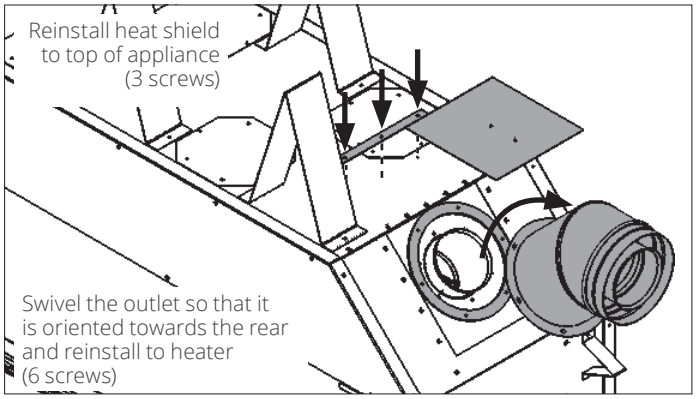

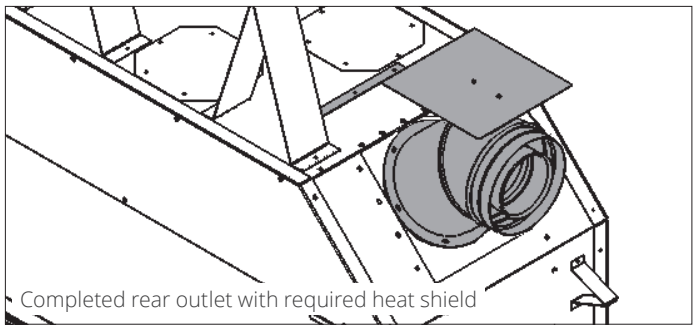

Fit Appliance into Framing

1. Remove the screws retaining the engine to its pallet.

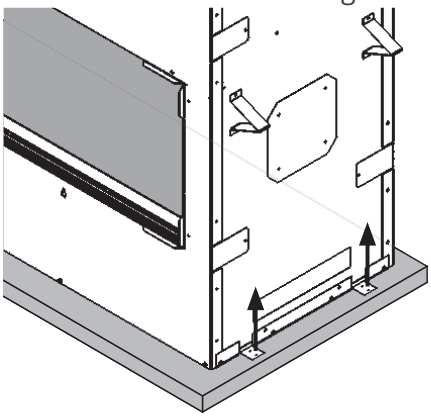

2. Taking great care not to cut your hands on the sheet metal edges, lift the appliance away from its packing base and place it in the framing. *Make sure that the unit is at the right height with consideration to the height of the hearth or combustible flooring.*
3. Fold out the 6 mounting tabs (3 front, 3 rear) and recess the appliance in the framing as shown.
4. Fasten the unit to framing using 3 screws or nails at the mounting tabs on the front and rear.
   Note: The sheet metal front face of the appliance is flush with the framing studs.

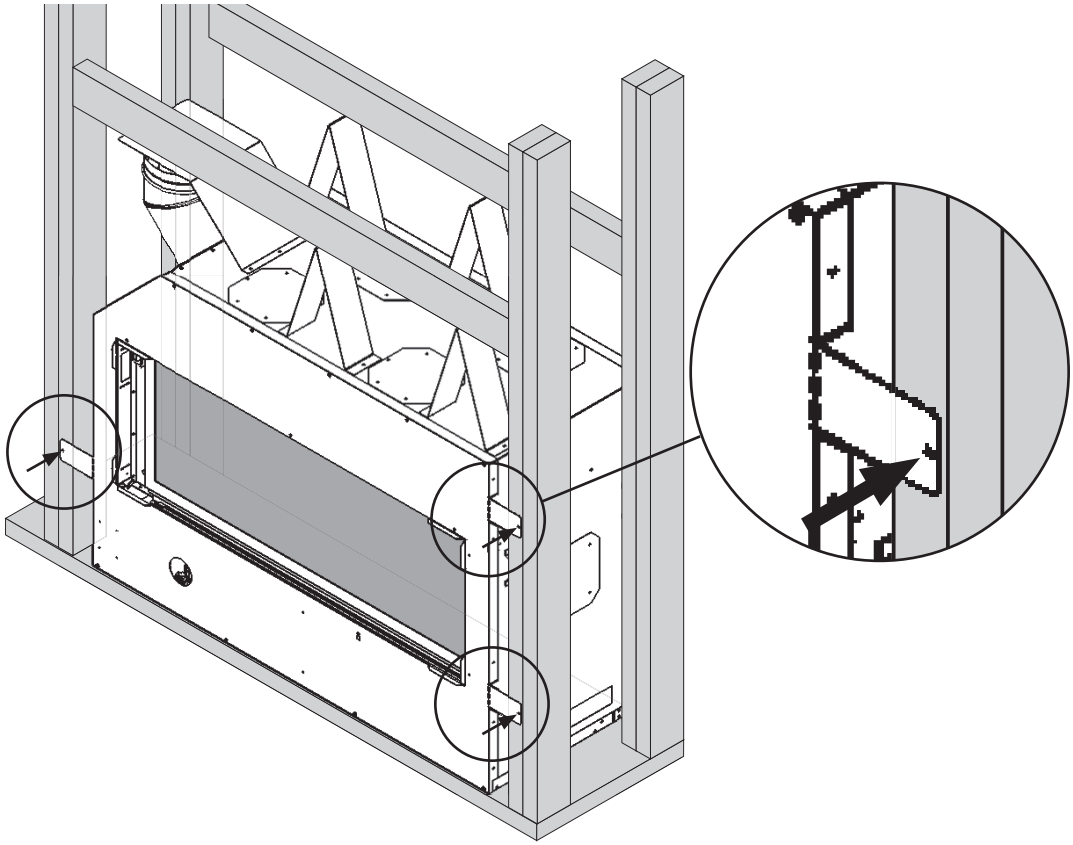

Remove Window

Each window is held in place by a spring-loaded lever on each side.

1. To remove the window, locate the levers on each side of the window towards the top. Using your finger, pull the lever towards you and unhook it from the window frame bracket.
2. Gently pull the top of the window outward.
3. Lift the window out of its bottom railing and set it aside in a safe place to avoid damage.

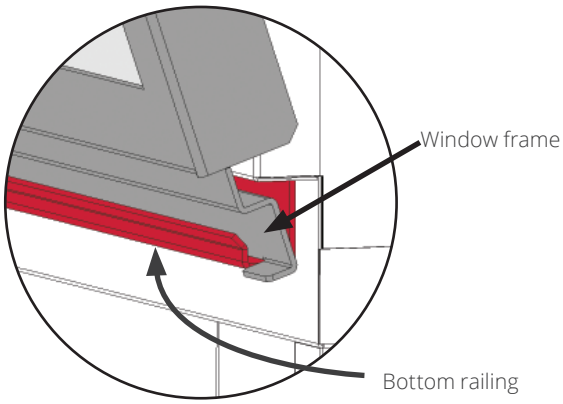

Section Views

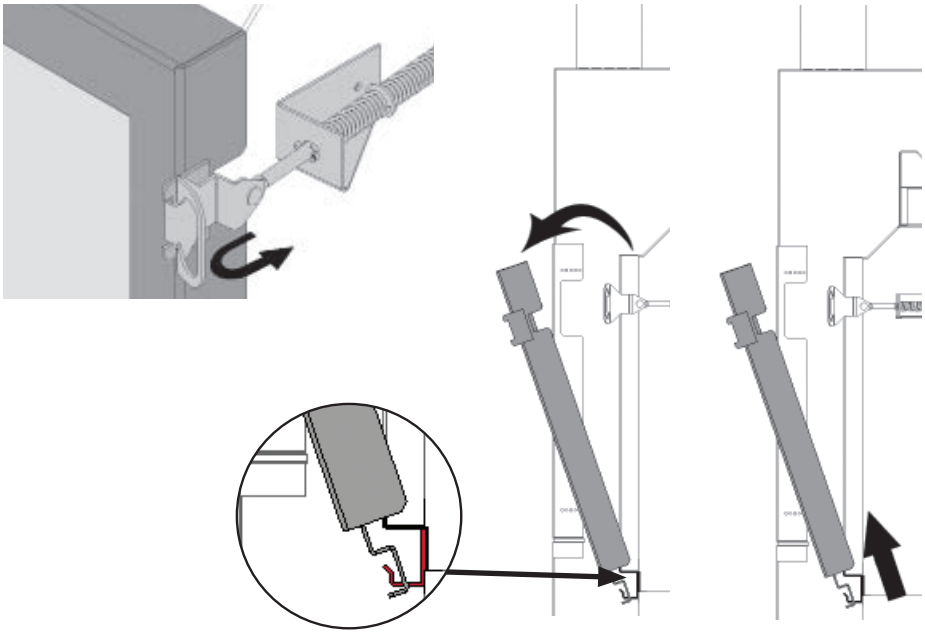

ONLY If You Are Installing HeatShift!

Perform the following steps and see "Appendix D—HeatShift System" on page 68 for more details regarding HeatShift planning and installation.

Remove Convection Baffles

To be effective, the HeatShift system requires that two internal convection baffles located above the firebox inside the appliance case be removed to allow the hot air flow to convect upwards into ducts installed on the fireplace.

Remove the first convection baffle from the appliance. It is held in place by 3 screws located right behind the upper edge of the fireplace opening. Recycle this panel as it is no longer needed.

Repeat this procedure on the reverse side of the appliance.

Appliance front panel—shown transparent for clarity

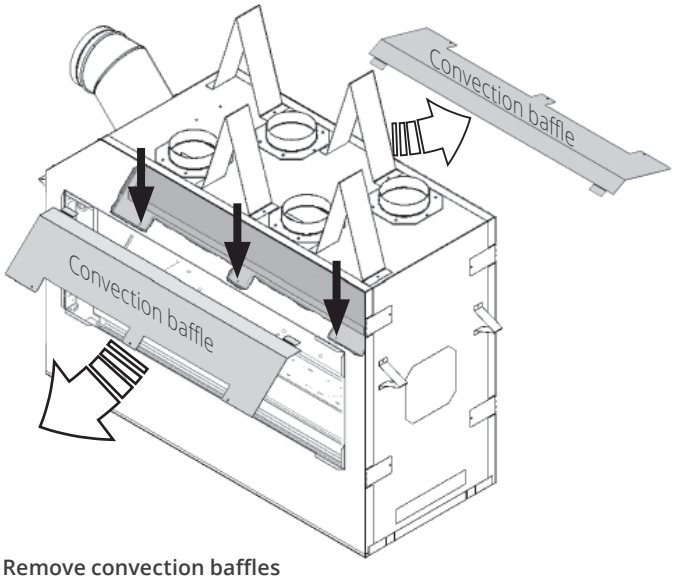

Remove convection baffles

Install HeatShift Take-Off Collars to Appliance

1. Remove the four cover plates on top of the appliance case (6 screws each).

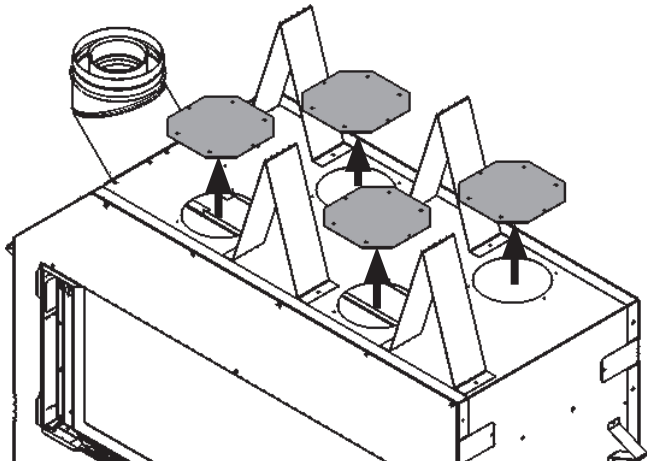

2. Install the collars on the holes on top of the appliance's case (6 screws each).

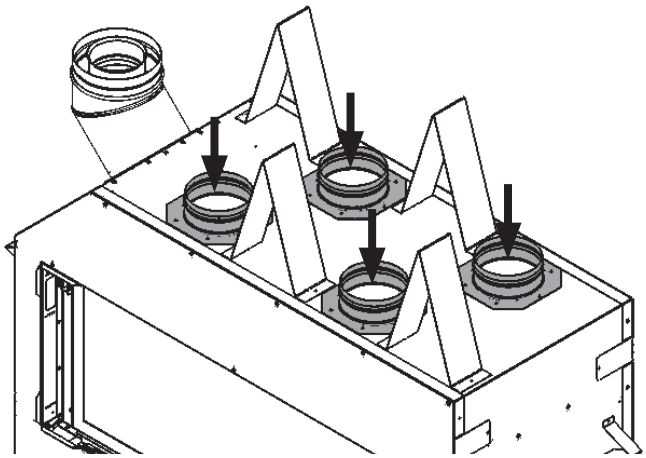

⚠ WARNING

The Linear fireplaces requires the removal of both internal convection baffles for the HeatShift system to function properly—read instructions carefully!

⚠ WARNING

All FOUR (4) takeoffs MUST BE CONNECTED TO PLENUM(S).

Install Electrical Wiring (if required)

This section provides information to install the electric pre-wiring required for use with the optional GV60WIFI WiFi Kit.

⚠ WARNING

All electrical installations must be performed by a qualified electrician and must be electrically wired and grounded in accordance with local codes or, in the absence of local codes, with the National Electrical Code, ANSI/NFPA 70 or the Canadian Electrical Code, CSA C22.1.

⚠ WARNING

NO ELECTRICAL CONNECTION ALLOWED for any outdoor installation!

Electrical Requirements

GV60WIFI—6 VDC (from receiver), less than 1 amp

General Requirements

The optional GV60WIFI kit requires a GV60VM power supply (known as a V-Module), which includes a three-prong grounded plug to plug into a grounded receptacle installed within the fireplace enclosure by a qualified electrician.

The receptacle, housing, and strain relief are supplied and installed as part of the fireplace.

Notes

- We recommend connecting the electrical box even if the optional kit has not been purchased. It is much easier to wire before wall finish is applied.
- Wiring within the receptacle enclosure must have a minimum 90°C temperature rating.
- Wire nuts not included.

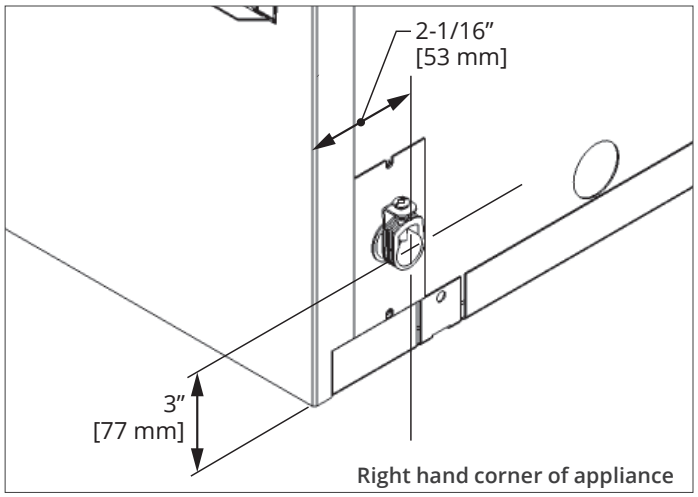

Installation

1. Locate the electrical housing. It is behind the front panel of the fireplace in the bottom right corner.

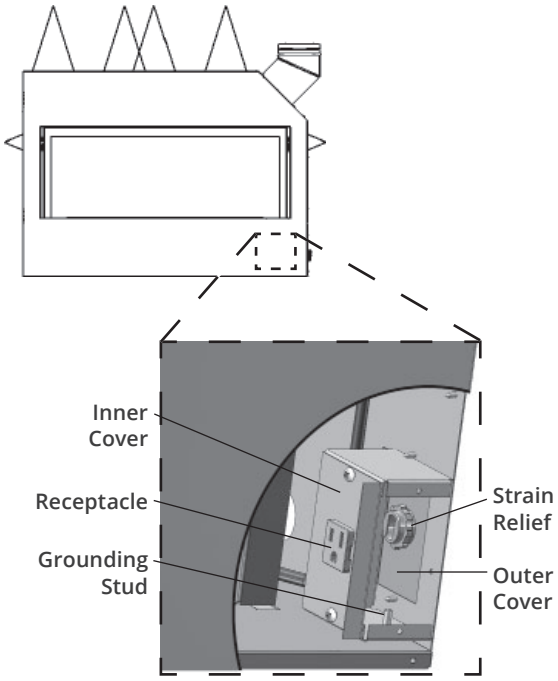

2. Remove the inner cover (2 screws).

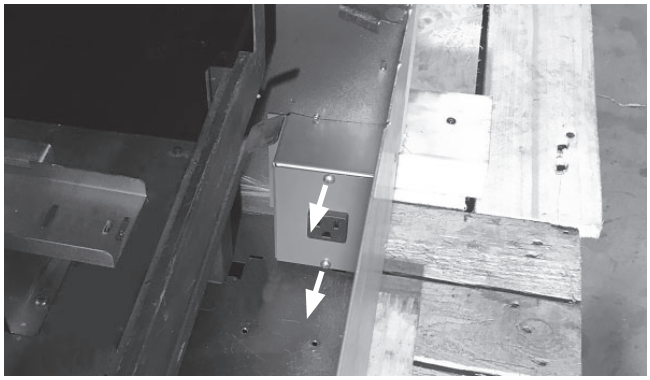

3. Pull the inner cover and receptacle (attached) out of the fireplace.

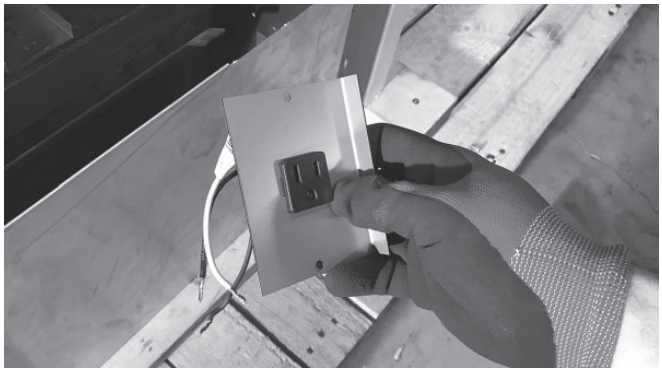

4. Thread the cable through the stud and the strain reflief in the fireplace case. **Do not tighten the clamp yet.** Pull as much wire through the case as you need to wire the receptacle outside the case.

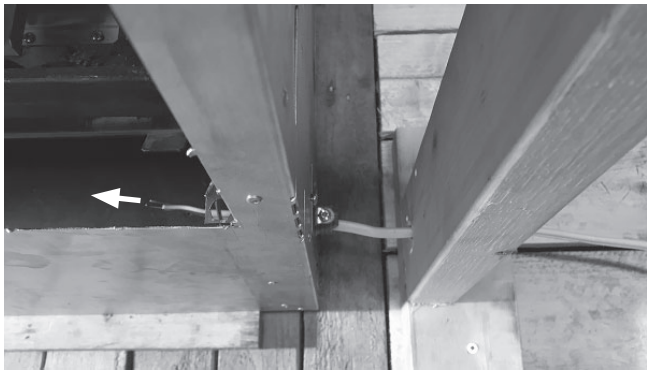

5. Strip wire and terminate grounded receptacle using wire nuts (not included). Place the connected receptacle back in the fireplace, and pull excess cable back through the strain relief.

6. Place the inner cover and receptacle in position and replace 2 screws.

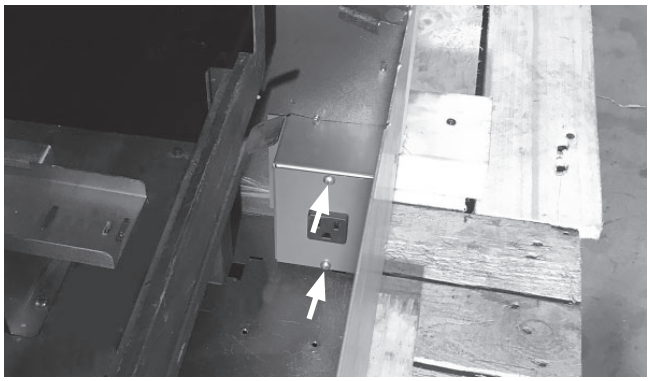

7. Leave your desired cable slack in the electrical box, and tighten the strain relief cable clamp outside of fireplace casing and secure and excess wire to framing.

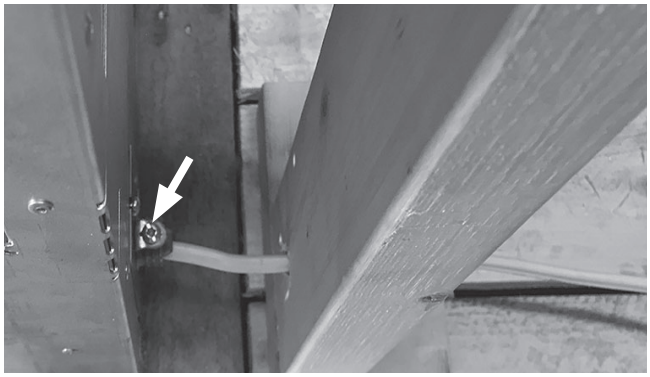

Set-up Gas Supply

The gas supply inlet connection is a 3/8" NPT male connector located on the left hand side of the firebox.

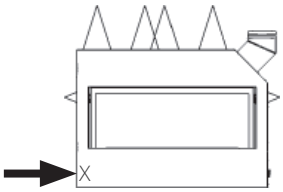

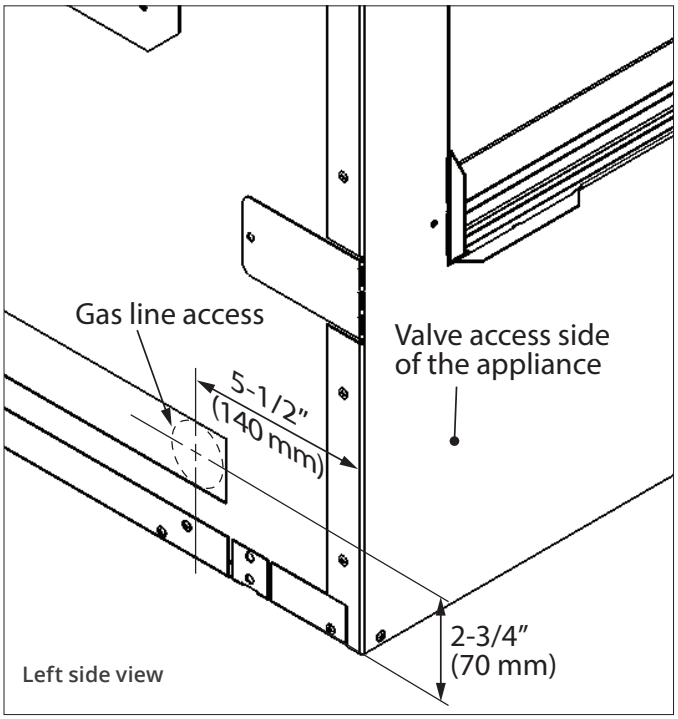

Left side view

The unit is supplied with a stainless steel flex line to allow the appliance to be disconnected for service. An individual shut-off valve (not supplied) is required on the supply line ahead of the flex connector.

Use only new black iron or steel pipes, CSST, or copper tubing if acceptable—check local codes. Note that in USA, copper tubing must be internally tinned for protection against sulfur compounds.

Unions in gas lines should be of ground joint type.

The gas supply line must be sized and installed to provide a supply of gas sufficient to meet the maximum demand of the appliance without undue loss of pressure.

Sealant used must be resistant to the action of all gas constituents including LP gas. Sealant should be applied lightly to male threads to ensure excess sealant does not enter gas lines.

Pressure test the supply line for leaks.

The appliance and its individual shut-off valve must be disconnected from the gas supply piping system during any pressure testing of that system at test pressures in excess of 1/2 psig (3.5 kPa).

The appliance must be isolated from the gas supply piping system by closing its individual manual shut-off valve during any pressure testing of the gas supply piping system at test pressures equal to or less than 1/2 psig (3.5 kPa).

Failure to either disconnect or isolate the appliance during pressure testing may result in regulator or valve damages and void the warranty. Consult your dealer in case of damages.

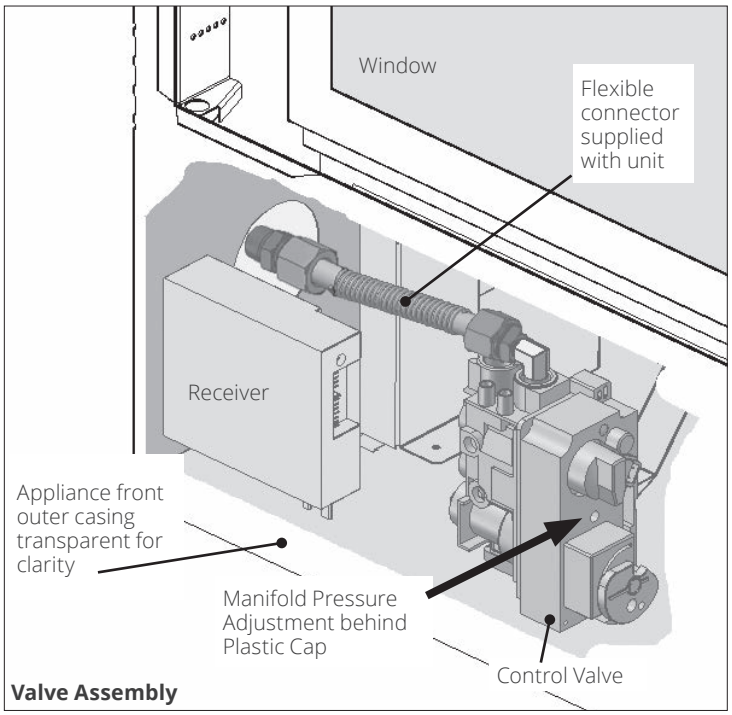

Valve Assembly

Pressure Test Points

The minimum supply pressure is given in the section "Specifications" on page 6.

All piping and connections must be tested for leaks after installation or servicing. All leaks must be corrected immediately.

When testing for leaks:

- Make sure that the appliance is turned off.
- Open the manual shut-off valve.
- Test for leaks by applying a liquid detergent or soap solution to all joints. Bubbles forming indicate a gas leak.

Caution

Never use an open flame to check for leaks! Correct any leak detected immediately.

The pressure test tapping locations are shown in the figure at right. An internal regulator within the valve controls the burner manifold pressure. The correct pressure range is shown in the table in section "Specifications" on page 6. The pressure check should be made with the burner alight and at its highest setting. See "Appendix A—Lighting Instructions" on page 59 for full operating details.

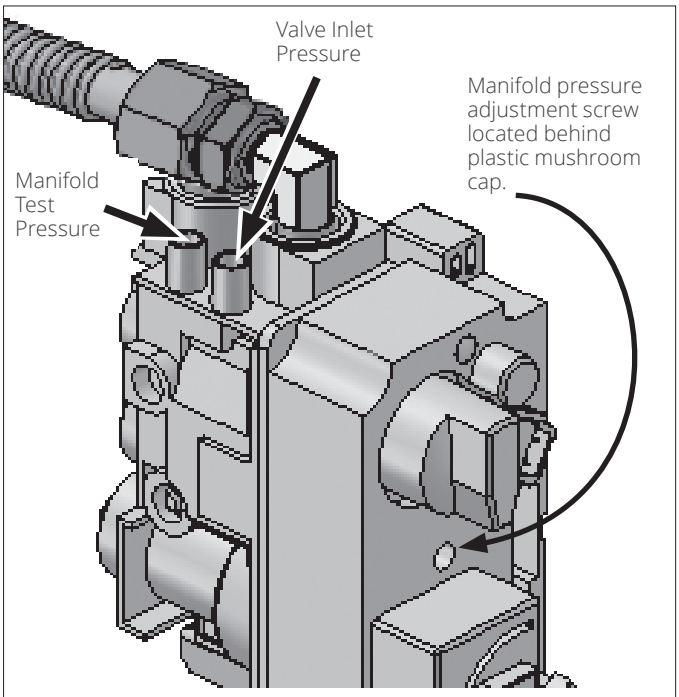

Pressure Testing

Install Liners

Unpack the liners carefully as they are fragile. The steel platform around the burner should not yet be installed.

Ceramic panels

1. Identify the top and bottom (fire) sides of the top panel, then slide it between the top panel support brackets.

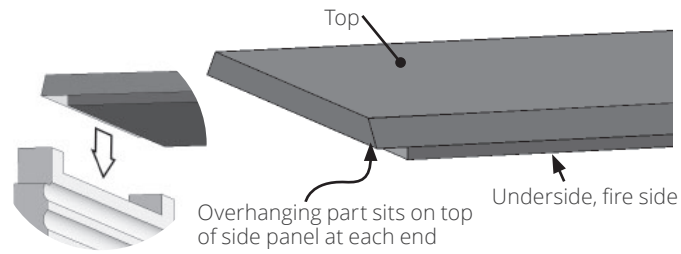

Top panel orientation

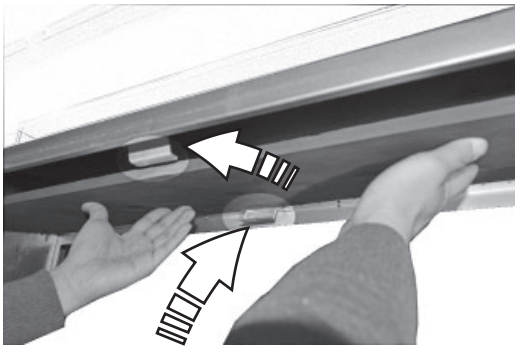

2. Lift the top panel slightly at one end of the firebox and place one side panel against the end wall and side of the firebox ensuring it is well seated against the firebox side.

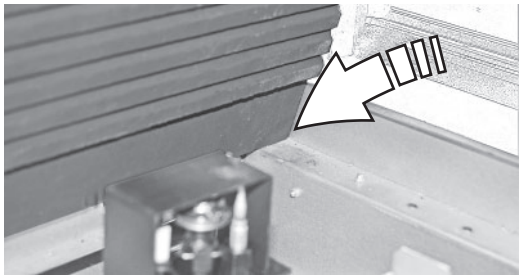

3. Let the top panel protruding part rest on the cut out of the upper part of the side panel.

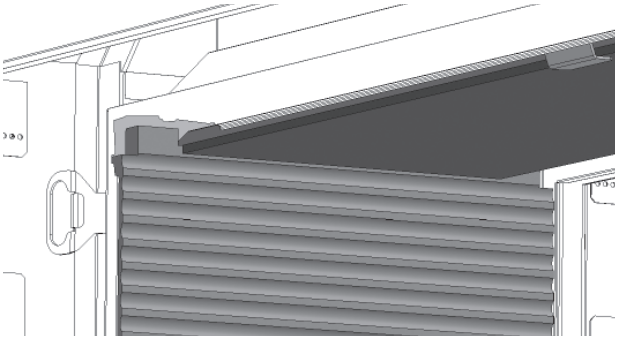

4. Repeat with the other side panel.

Glass panels

1. Install the top panel, sliding it between the top panel support brackets.

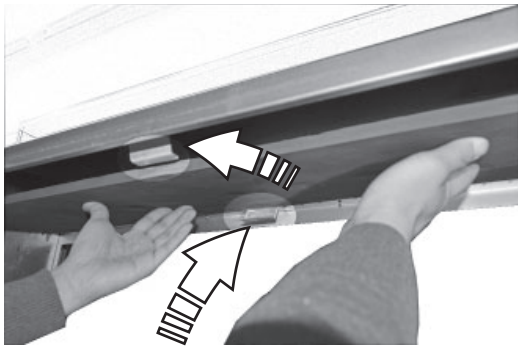

2. Fit the anchor brackets onto the side panels.

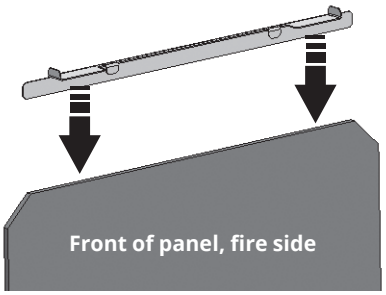

3. Place one side glass panel and anchor against the side wall of the firebox, smooth side showing.
4. Add the other side glass panel and anchor; place the other end of the top panel on its anchor bracket.

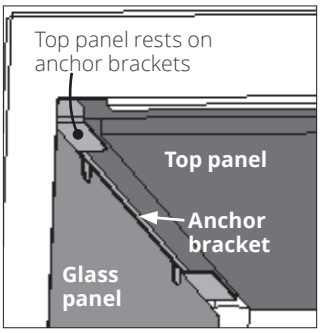

Birch Log Kit 1505BLKV2

Material Required

- Steel platform (supplied with fireplace)
- 1505BLKV2 Birch Log Kit, which contains :
  - 8 logs
  - 1 bag of embers (6 cup bag)

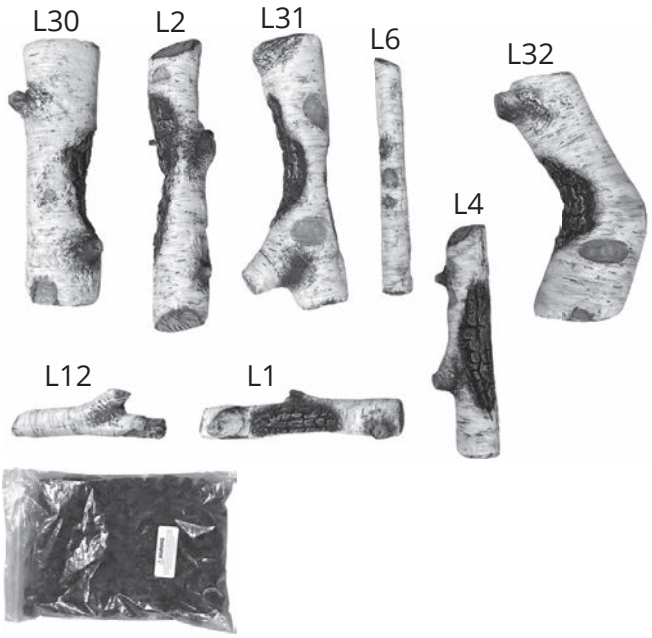

- Gloves, if desired

Note

Use of V2 log sets may increase the possibility of soot formation when the air shutter is closed. The L1 units are fitted with an air shutter stopper to prevent closing the aeration completely in order to prevent sooting in most situations. However, it is still possible that some sooting may occur under certain conditions.

Evaluate the flame picture carefully after the unit has warmed up for fifteen minutes, and avoid closing the air shutter completely when there is limited rise in the venting system or the flame appears overly luminous and lazy with smoke trailing off the flame tips.

Refer to "Checking Operation and Aeration" on page 54 for details about aeration adjustment.

Carefully unpack the kit. Note each log has its own number stamped on the bottom. Some logs have pegs to help you place them on other logs.

Install the logs as follows.

1. Install the steel platform around the burner as indicated. The openings in the platform should be underneath.

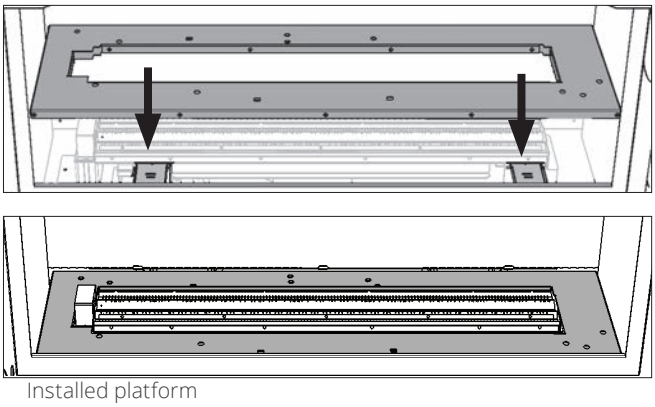

Installed platform

2. Place log L30 with the pin inserted in the hole as shown. Put the other end of the log on the pilot shield.

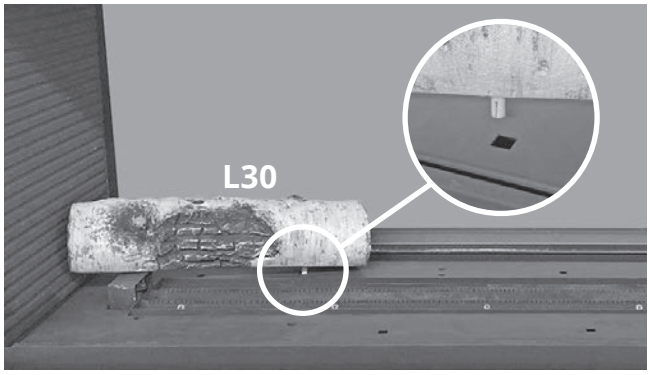

3. Place log L2 with the pin inserted in the hole in L30 as shown, across the burner to the front of the media platform.

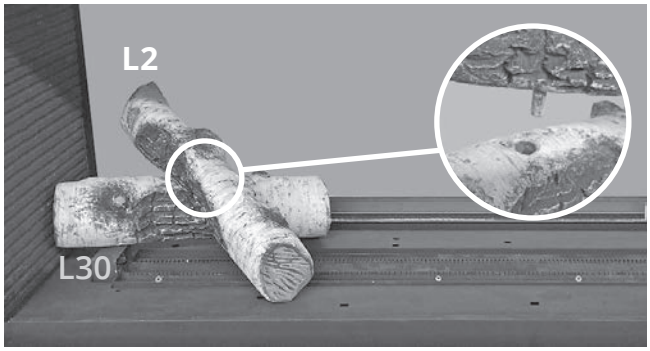

4. Place log L12 onto the corner of the burner as shown. It should not touch the pilot light.

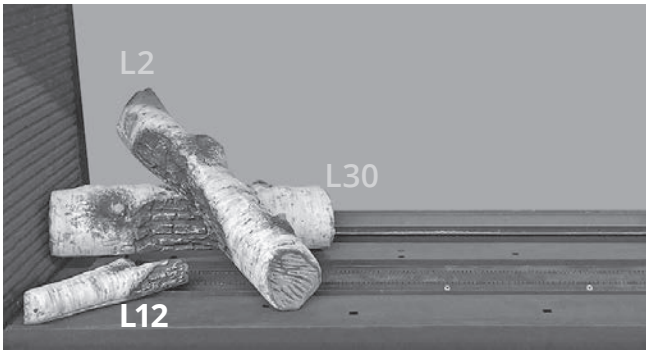

5. Place log L31 across the platform as shown with the pin inserted in the front hole as shown. A small amount of embers should be placed into the burner as shown to lift the front of the log slightly.

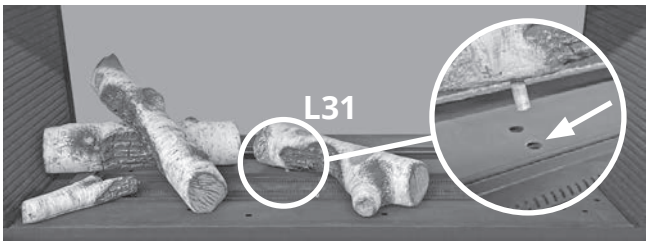

6. Place log L6 from the rear groove on the top of L31 to the rear of the media platform.

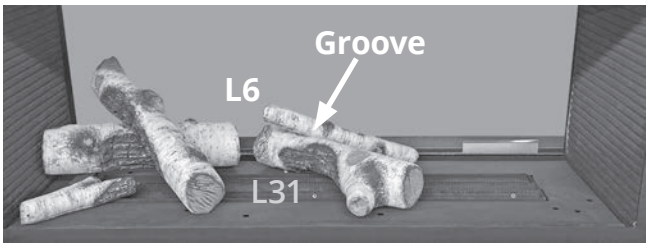

7. Place log L1 from the front groove on the top of L31 and onto the front of the media platform.

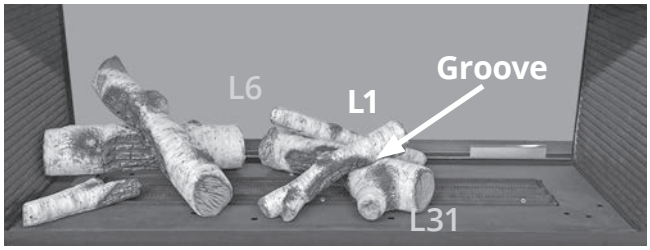

8. Place log L32 with its bottom cutout around the front corner of the burner.

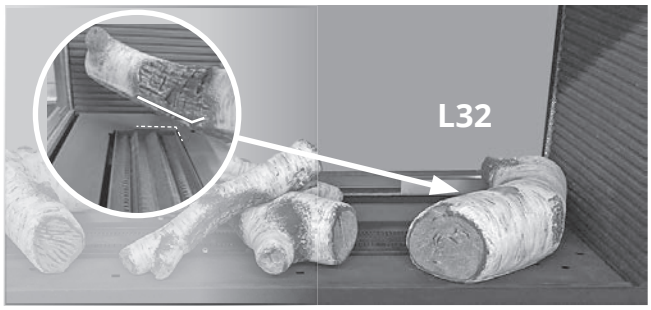

9. Place log L4 on the groove on the top of L32 and across the burner to the rear platform.

10. Place (do not pour) embers by hand on the burner and media platform.

Birch Log Kit 1505BLKV2 installed

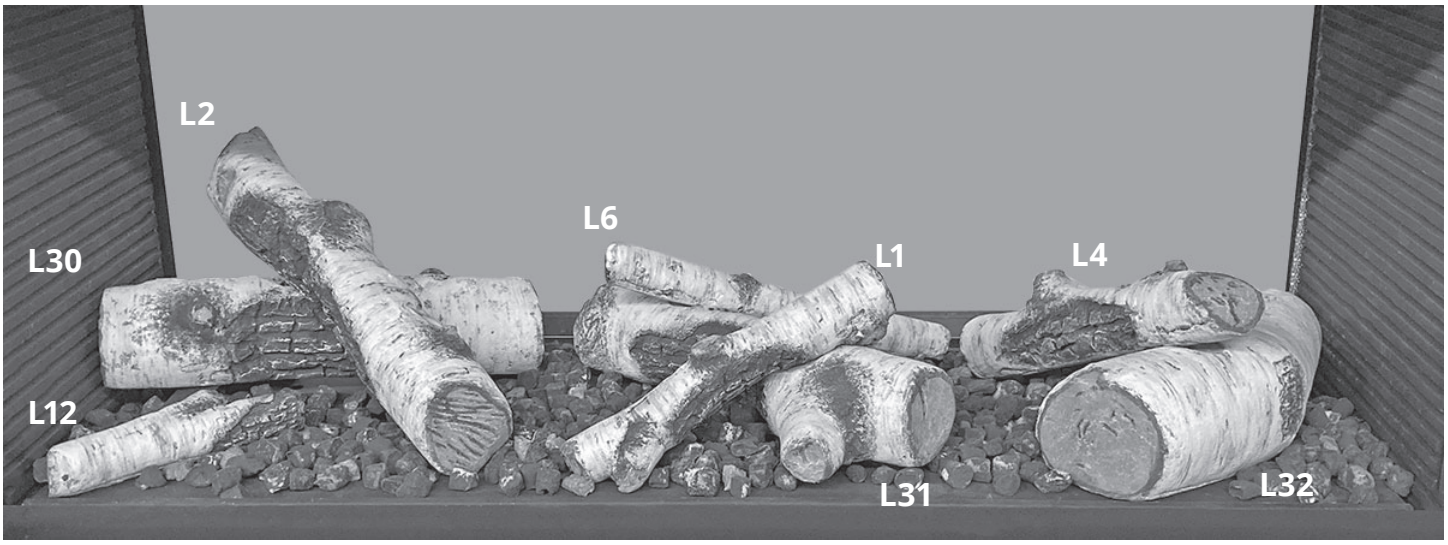

IMPORTANT

Approved for use only with the ceramic embers provided with your Valor fireplace. The use of any other products may void your fireplace warranty.

WARNING

Choking Hazard! Ensure that the fireplace area is clear of embers as these could be ingested by small children. Vacuum area after installation.

Driftwood Kit 1505DWKV2

Material required

- Black steel platform (supplied with appliance)
- Driftwood Kit containing:
  - 6 logs
  - 6 pebbles
  - 1 bag of vermiculite, 5-1/2 cups
- Gloves, if desired, not supplied

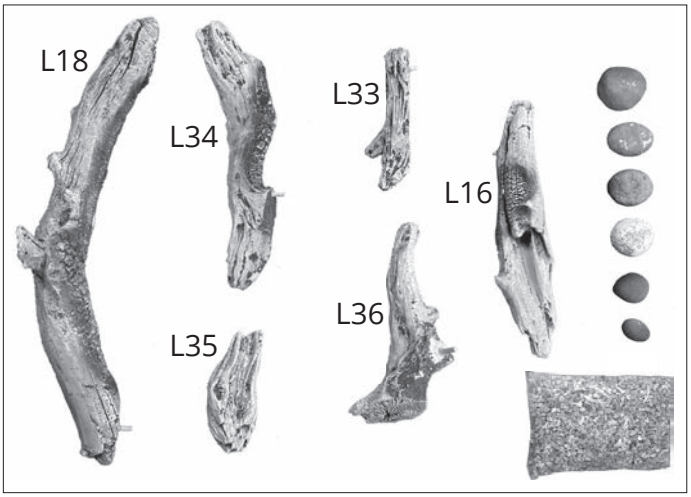

Note

Use of V2 log sets may increase the possibility of soot formation when the air shutter is closed. The L1 units are fitted with an air shutter stopper to prevent closing the aeration completely in order to prevent sooting in most situations. However, it is still possible that some sooting may occur under certain conditions.

Evaluate the flame picture carefully after the unit has warmed up for fifteen minutes, and avoid closing the air shutter completely when there is limited rise in the venting system or the flame appears overly luminous and lazy with smoke trailing off the flame tips.

Refer to "Checking Operation and Aeration" on page 54 for details about aeration adjustment.

Installation

1. Carefully unpack the kit. Note each log has its own number stamped on the bottom. Some logs have pegs to help you place them on other logs.
2. Install the steel platform around the burner as indicated. The openings in the platform should be underneath.

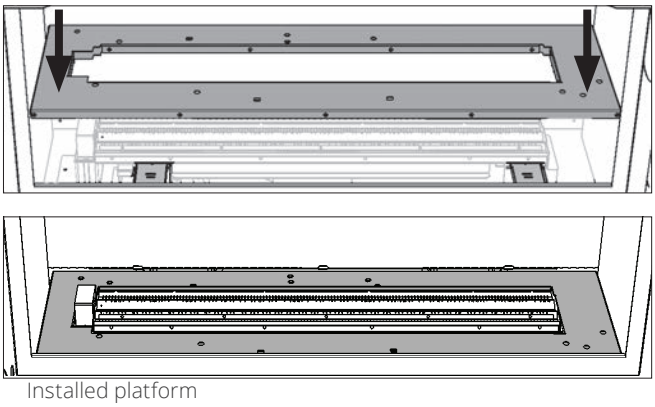

Installed platform

3. Carefully spread some of the vermiculite on the surface of burner patting it gently with your hand to form a single layer to the approximate level of the top of the flange at the edge of the burner. Do not pour too much to avoid blocking the burner ports.

NOTE: Ensure the area within the pilot shield is clear of vermiculite.

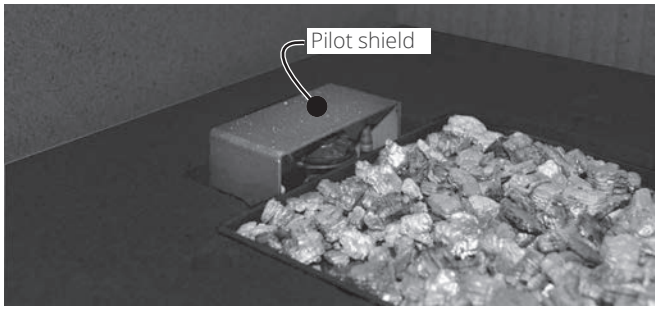

4. Place log L34 with the pin in the hole as shown. The left end of the log should rest gently on the pilot shield.

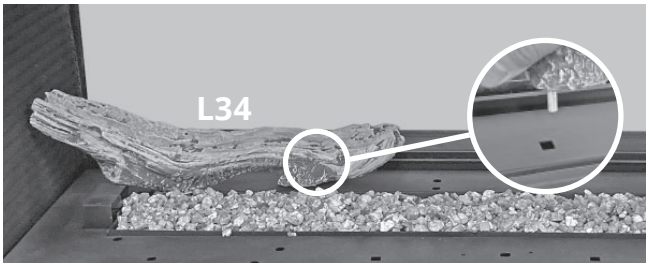

5. Place log L33 with the pin in the hole as shown.

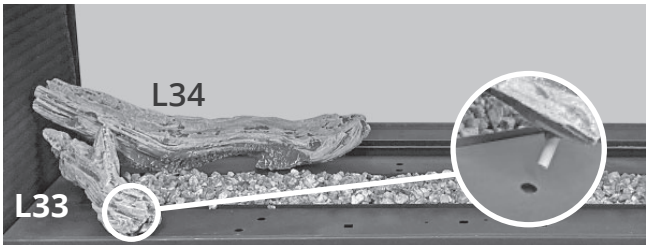

6. Place log L18 with the pin in the hole as shown, across the burner to the rear side. The rear leg of the log should just touch the burner.

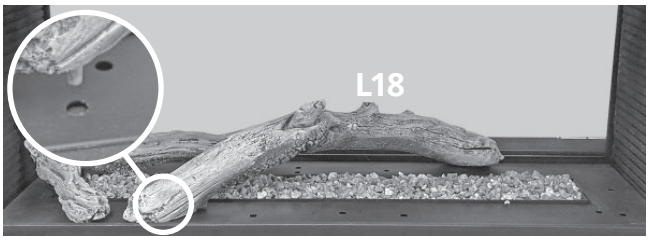

7. Place log L16 from the front side of the platform onto the natural curve in log L18 as shown.

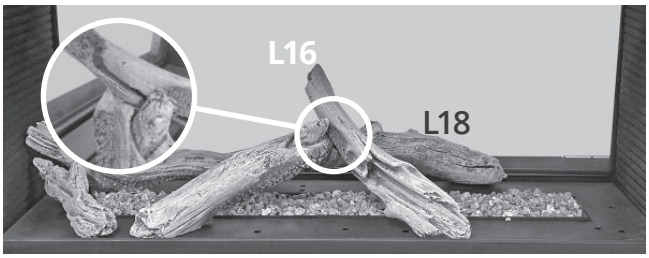

8. Place log L35 on the front of the platform as shown.

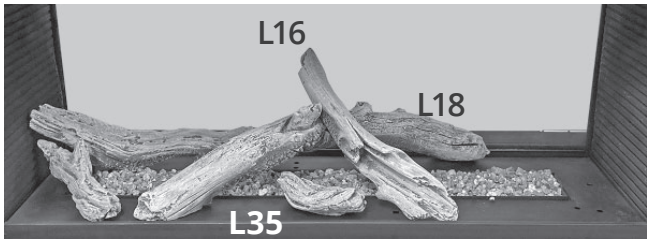

9. Place log L36 with the pin in the hole as shown.

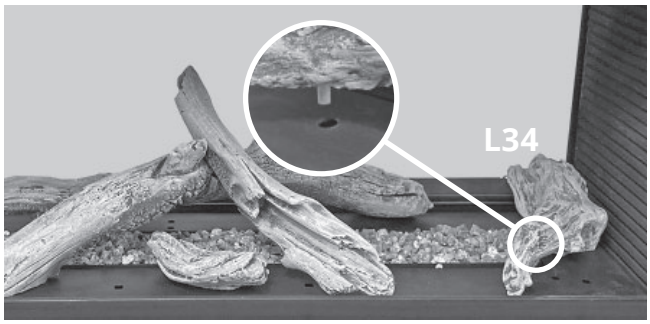

10. Place remaining vermiculite around logs on the platform.

11. Place pebbles as desired. The two smallest pebbles can go directly on the burner.

Completed L1 1600 Installation

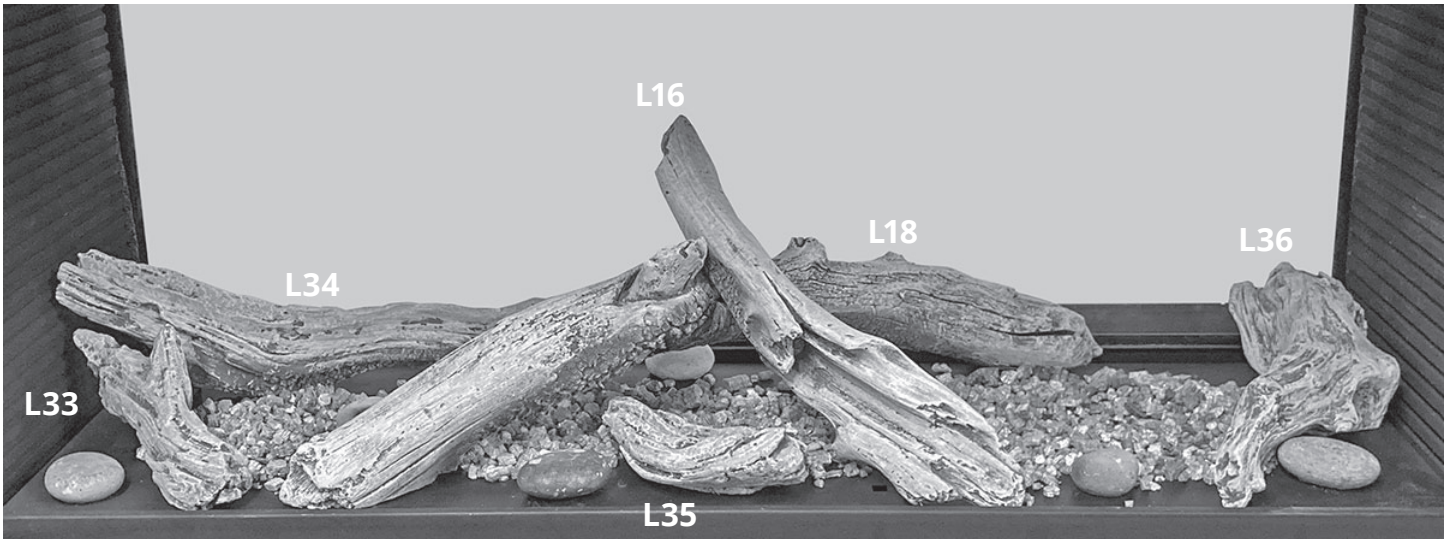

IMPORTANT

Approved for use only with the vermiculite provided with your Valor fireplace. The use of any other products may void your fireplace warranty.

WARNING

Choking Hazard! Ensure that the fireplace area is clear of vermiculite pieces as these could be ingested by small children. Vacuum area after installation.

Decorative Glass Murano 1500DGM

Material required

- Steel platform (supplied with appliance)
- Decorative Glass Murano Glass kit, which contains:
  - 1 glass platform
  - 1 bag of clear 1/2" fireglass

Installation

Carefully unpack the kit.

1. Install the steel platform around the burner as indicated. The openings in the platform should be underneath. The edge of the burner protrudes above the platform.

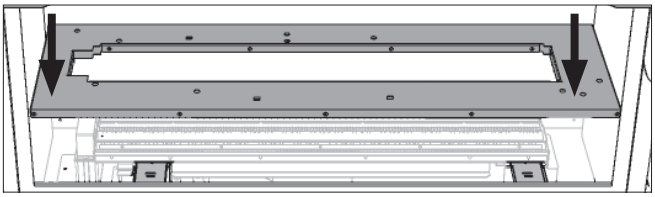

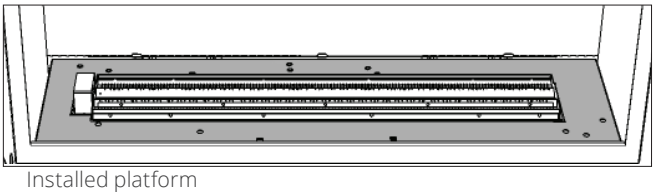

Installed platform

2. Install the glass plate on the platform, the textured side underneath and the smooth side on top. The plate is flush with the edge of the burner.

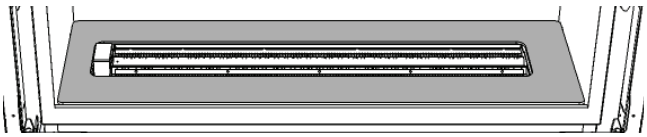

Installed glass plate

3. Carefully spread the fireglass on the surface of burner patting it gently with your hand to form a single layer to the approximate level of the top edge of the flange around the burner. Do not place too much to avoid blocking the burner ports.

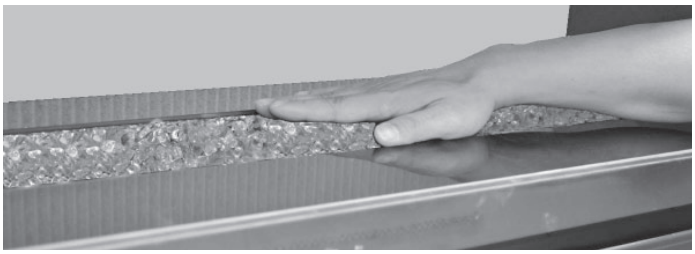

4. Some fireglass may be added on the platform to cover the edge of the burner and in the space in front and behind the pilot shield.
   NOTE: Ensure the area ***within*** the pilot shield is clear of fireglass.

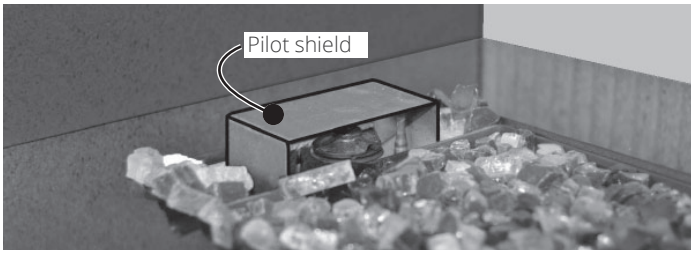

IMPORTANT

Approved for use only with the fireglass provided with your Valor fireplace or the tempered crushed fireglass brands *American Fireglass*™ or *firegear*. The use of any other fireglass products may void your fireplace warranty.

⚠ WARNING

Choking Hazard! Ensure that the fireplace area is clear of fireglass particles as these could be ingested by small children. Vacuum area after installation.

Rocks & Shale Set 1514RSS

Material required

- Black steel platform (supplied with appliance)
- Rock & Shale Set, which contains:
  - 5 twigs
  - 29 rocks (assorted colors)
  - 1 bag of 3/4" grey/black shale

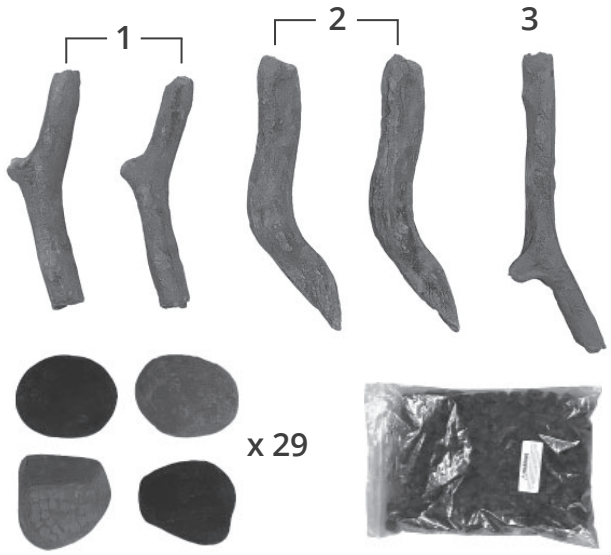

Overview

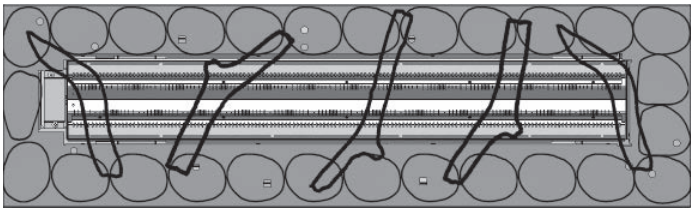

Installation

1. Carefully unpack the kit, as the logs are fragile.
2. Install the steel platform around the burner as indicated. The openings in the platform should be underneath.

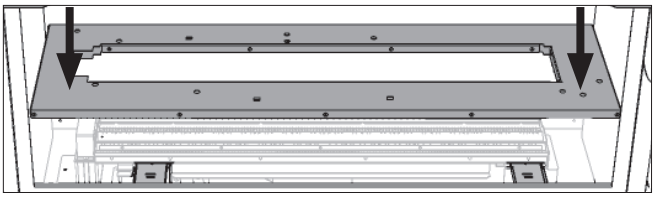

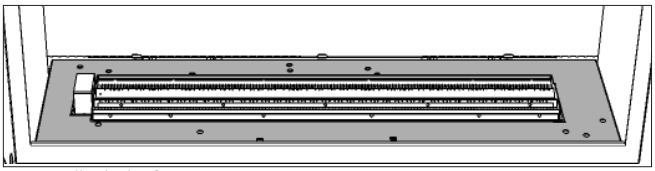

Installed platform

3. Place the rocks around the burner, on the media platform.

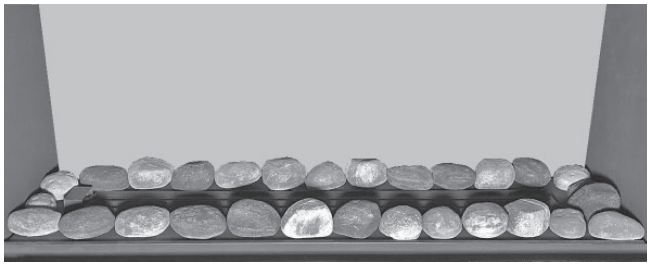

4. Place the first twig #2 as shown, from on top of the rear rocks, across the burner, to the media platform. It should not rest directly on the burner.

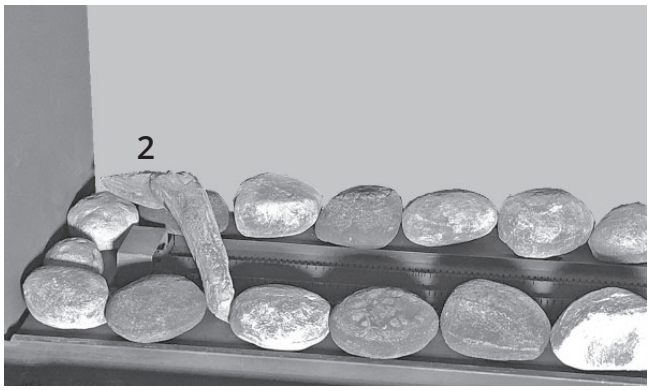

IMPORTANT

All twigs installed in this kit should be resting on the rocks, not the burner, as much as possible.

5. Place the first twig #1 as shown. Do not place it directly on the burner.

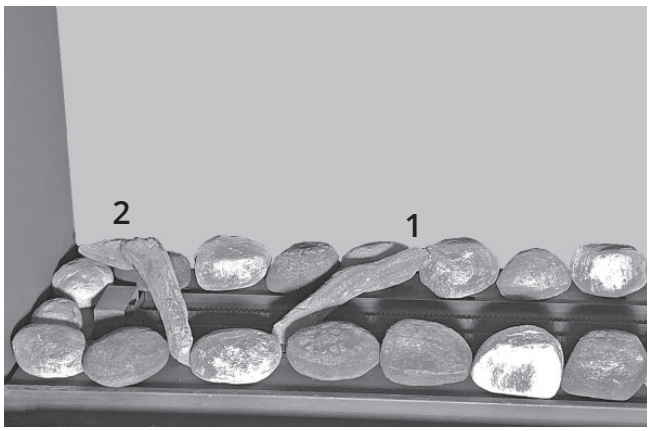

6. Place twig #3 as shown. Do not place it directly on the burner.

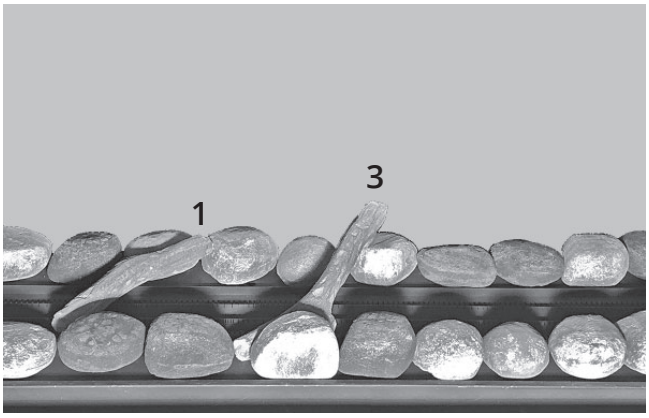

7. Place the second twig #1 as shown. Do not place it directly on the burner.

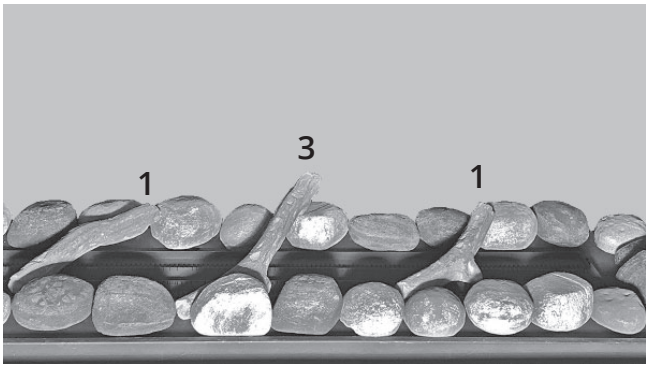

8. Place the second twig #2 as shown. Do not place it directly on the burner.

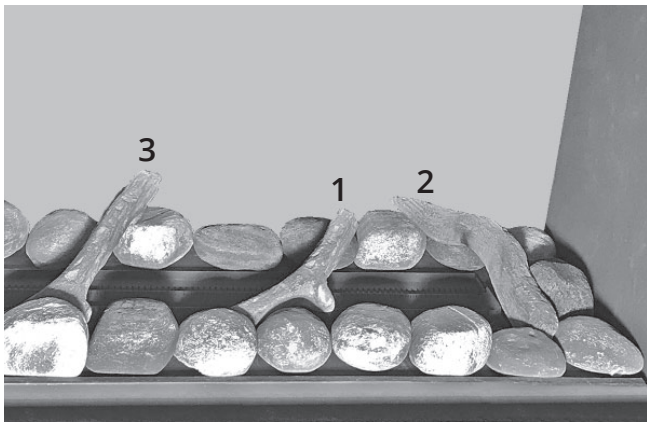

9. Place (do not pour) the shale directly onto the burner.

IMPORTANT

Use only the ceramic rocks, twigs and shale provided with your Valor fireplace. The use of any other products may void your fireplace warranty.

WARNING

Choking Hazard! Ensure that the fireplace area is clear of shale pieces as these could be ingested by small children. Vacuum area after installation.

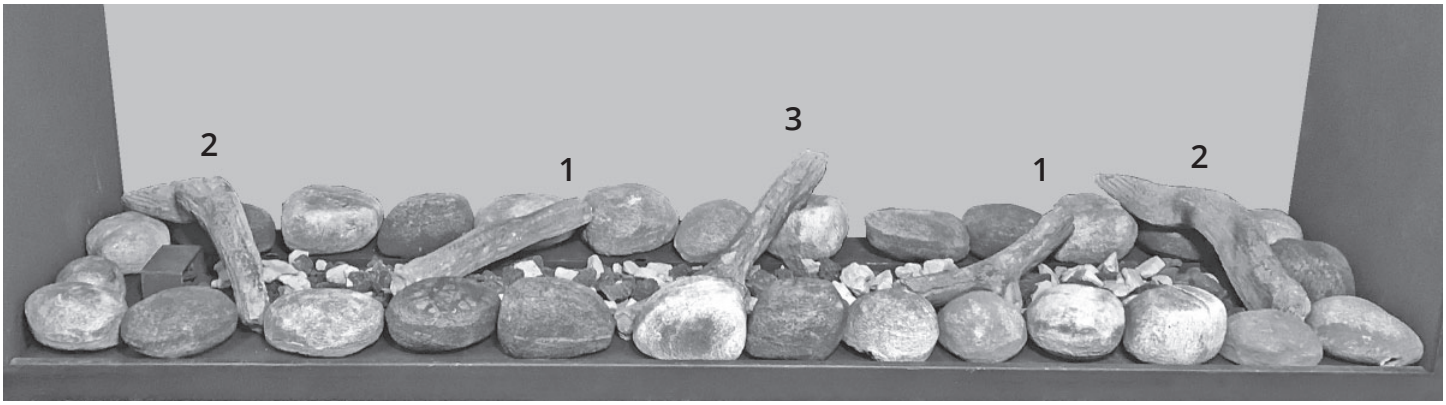

Rocks & shale fuel bed installed

Split Wood Kit 1505SWKV2

Material required

- Black steel platform (supplied with appliance)
- Split Wood Kit, which contains:
  - 9 logs (numbered)
  - 1 bag of grey embers, 6 cups
- Gloves, if desired, not supplied

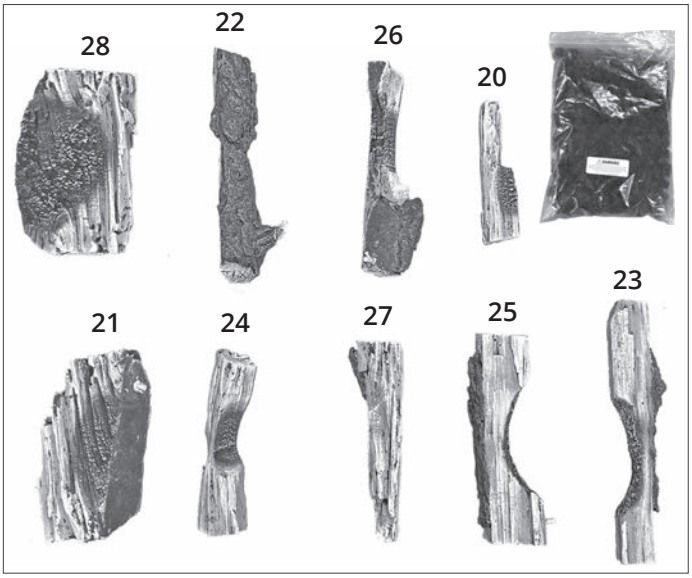

Note

Use of V2 log sets may increase the possibility of soot formation when the air shutter is closed. The L1 units are fitted with an air shutter stopper to prevent closing the aeration completely in order to prevent sooting in most situations. However, it is still possible that some sooting may occur under certain conditions.

Evaluate the flame picture carefully after the unit has warmed up for fifteen minutes, and avoid closing the air shutter completely when there is limited rise in the venting system or the flame appears overly luminous and lazy with smoke trailing off the flame tips.

Refer to "Checking Operation and Aeration" on page 54 for details about aeration adjustment.

Installation

Carefully unpack the kit. Note each log has its own number stamped on the bottom. Some logs have pegs to help you place them on other logs.

Install the logs as follows.

1. Install the steel platform around the burner as indicated. The openings in the platform should be underneath.

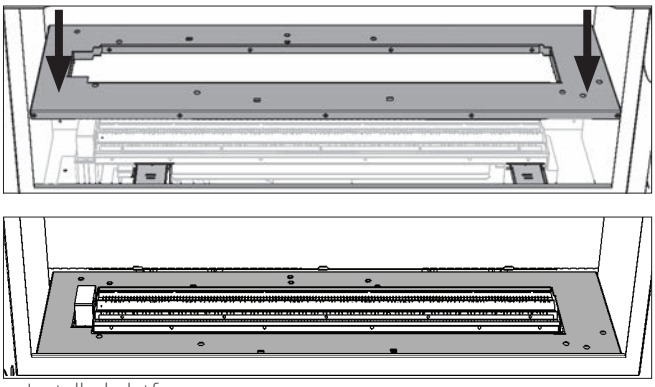

Installed platform

2. Place log 21 as shown with the pin in the hole.

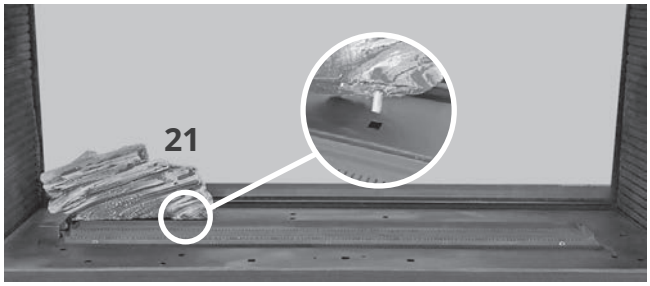

3. Place log 22 from on top of log 21, across the burner to the front platform.

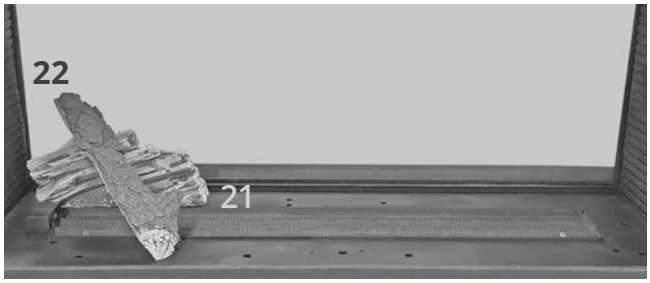

4. Place log 20 as shown, on top of the pilot shield.

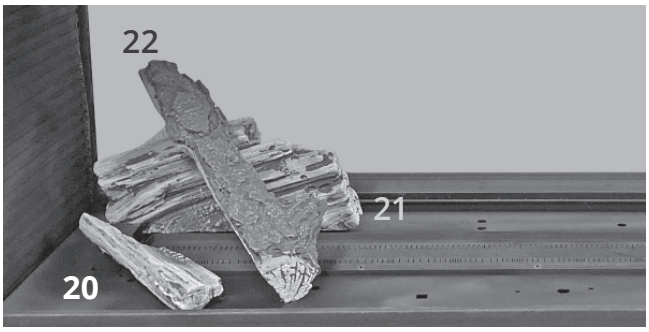

5. Place log 25 with the front pin in the front platform.

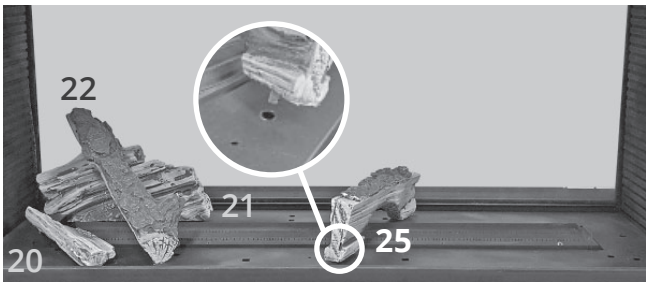

6. Place log 26 as shown, from on top of log 25 to the platform. Insert the pin into the hole closer to the burner.

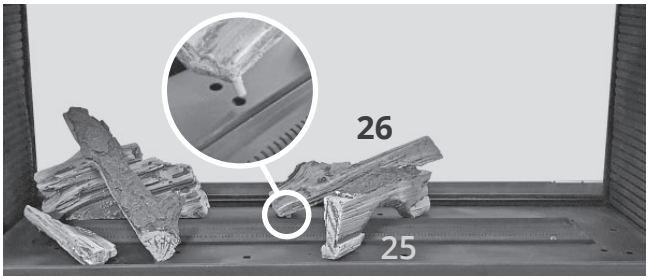

7. Place log 23 from the front platform to the top of 26.

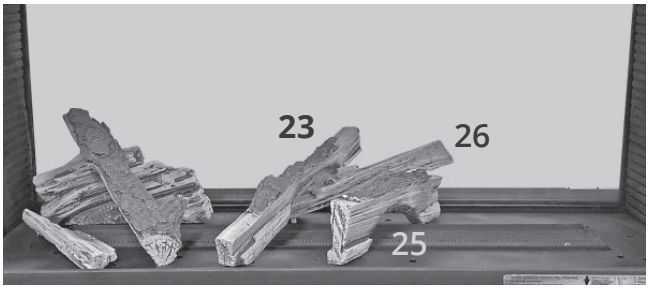

8. Place log 24 into the notch on top of 25.

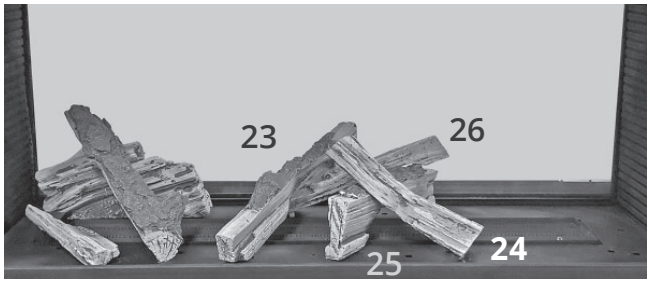

9. Place log 28 as shown. There is a cutout that fits over the right front corner of the burner - the log should be placed against the burner and then slid 1/4" toward the rear of the fireplace.

10. Place log 27 on top of log 28 to the rear of the platform.

11. Place (do not pour) embers among the logs.

Completed L1 1600 Installation

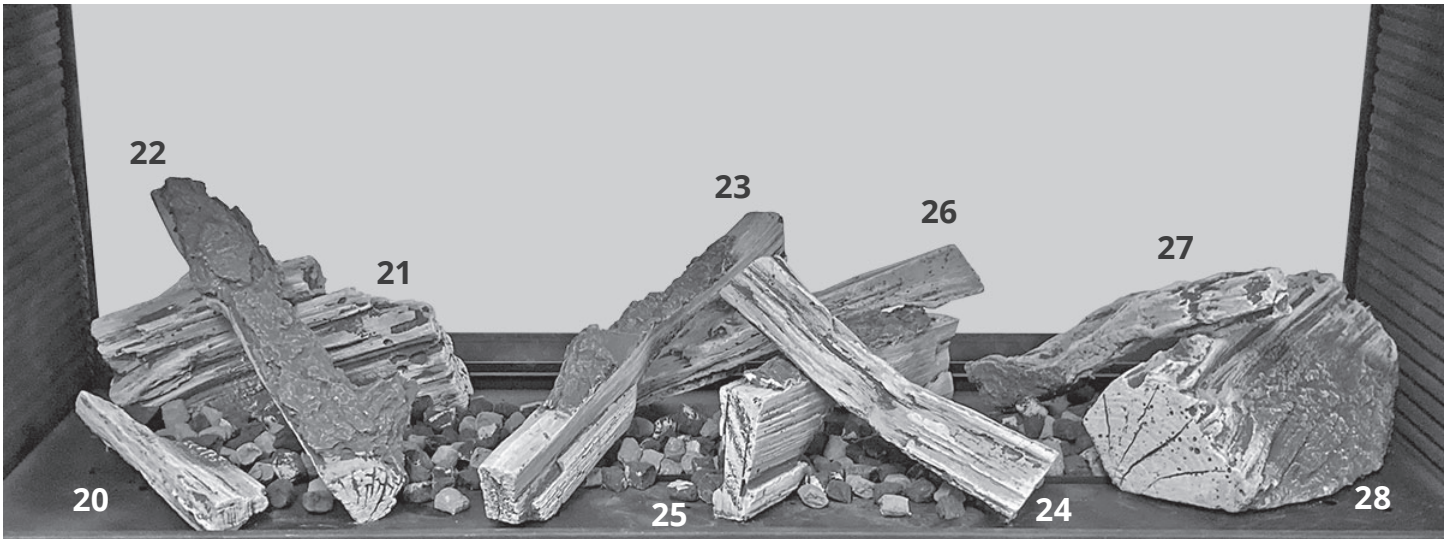

IMPORTANT

Approved for use only with the embers provided with your Valor fireplace. The use of any other products may void your fireplace warranty.

WARNING

Choking Hazard! Ensure that the fireplace area is clear of embers pieces as these could be ingested by small children. Vacuum area after installation.

Refit and Check Window

1. Place the window in its bottom railing. **Ensure to remove any vermiculite or glass particles in the railing before installing the window.**

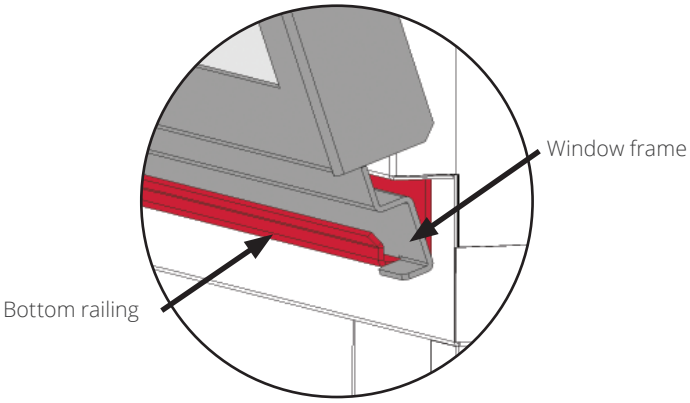

2. Push the top of the window frame against the firebox.

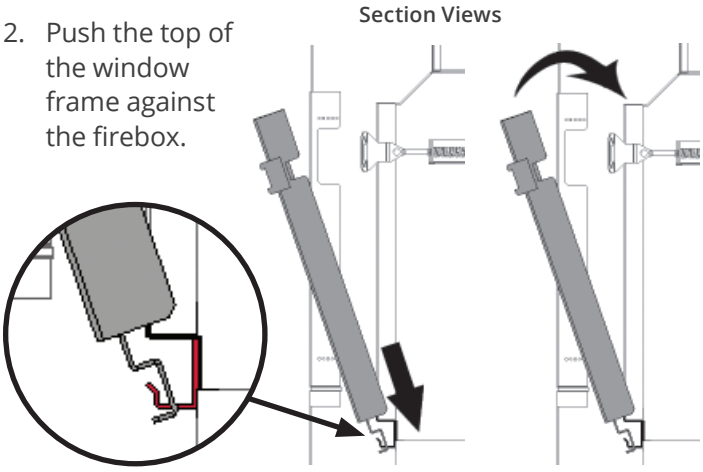

3. While you hold it, pull and hook the side levers back to the window brackets on each side.

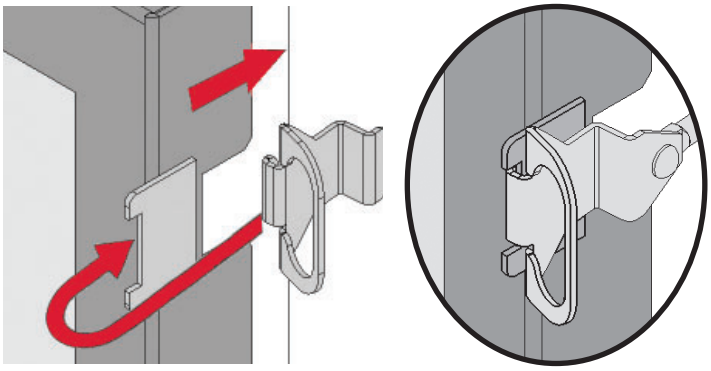

4. Pull out top of window to ensure spring loaded levers work properly.
5. Apply firm hand pressure around the window frame to ensure the window is sealed tight against the firebox.

⚠ WARNING

The window unit must be correctly installed, fastened and sealed after servicing or serious bodily injury and/or damage to the appliance may result.

To ensure a safe operation:

- **Double-check that the bottom of the window frame is correctly installed in the bottom support railing;**
- **Verify that the levers are hooked properly to the window tabs then;**
- **Pull out the top of the window and release it to insure the springs return it;**
- **Ensure the window is sealed before operation.**

⚠ WARNING

Failure to install the window correctly can:

- **Leak carbon monoxide.**
- **Affect the performance of the fireplace.**
- **Damage components.**
- **Cause overheating resulting in dangerous conditions.**

Damage caused by incorrect window installation is not covered by the Valor Warranty.

6. If the Hot Glass Warning plate has been removed from the front lower corner of the window, re-install it by sliding it between the glass and the frame as indicated.

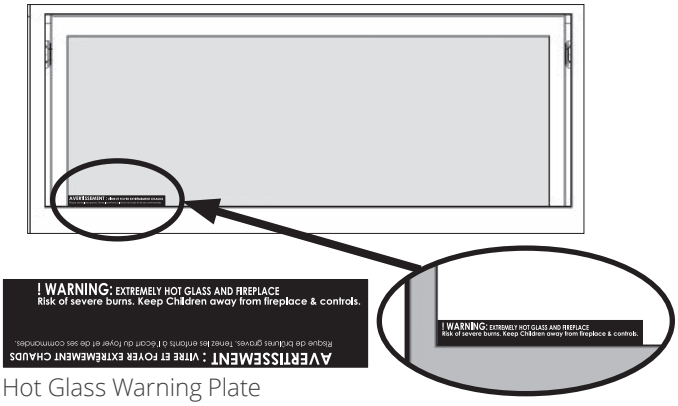

Hot Glass Warning Plate

Install Remote Battery and Wall Switch Kit (required)

The Remote Battery and Wall Switch Kit is provided with this appliance. It connects to the receiver in the fireplace.

The receiver is located under the firebox, left of the control valve. It is maintained in position with **Velcro** bands.

1. Pull out the receiver from its location to connect the battery holder and wall switch.
2. Feed the 'white connector end' of the harness assembly through side holes in fireplace liner body to receiver. Ensure sufficient harness length to allow for removal of receiver. Note - coil up any extra harness at fireplace end.
3. Connect switch to auxillary 5-pin junction and power connection to jack.

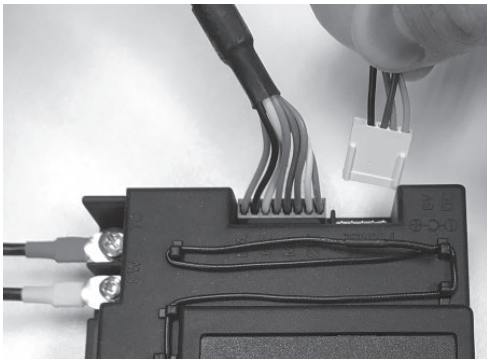

IMPORTANT: The connection can only be done one way.

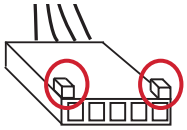

Do not force it or damage the pins on the receiver box!

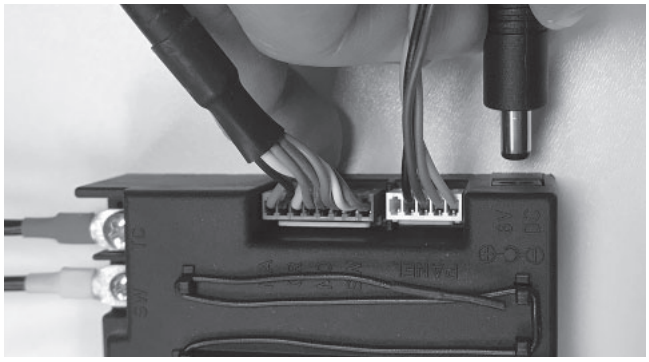

⚠ Caution

DO NOT PUT BATTERIES IN THE BATTERY HOLDER until the wires are connected to the burner control unit as short-circuit could result in the destruction of the electrical components.

Do not run the switch wire over the top of the firebox. Route the wire so it does not contact the firebox.

4. Run harness assembly to mounted position of junction box, securing harness to framing using insulated staples (not included)
5. Feed harness assembly through a restrain on rear of junction box, feeding through until harness sheath is pinched by retainer and providing sufficent length to make connection to rear of switch and battery holder.

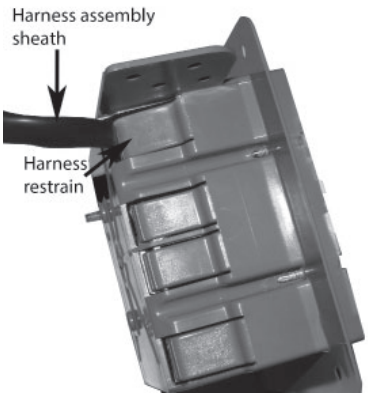

6. Secure junction box to the mounting surface using appropriate fasteners (not included)
7. Align molex connection on switch cable of harness assembly and connect to switch.

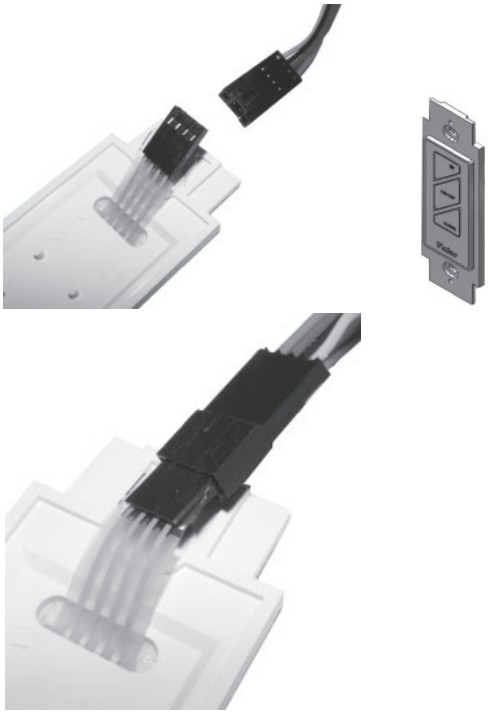

8. Mount switch plate to junction box with 2 long screws provided. Note: switch position left or right to suit homeowner wishes.

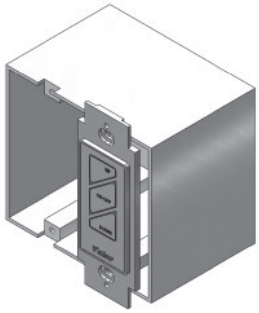

9. Locate and secure magnet plate using 2 'long' screws provided

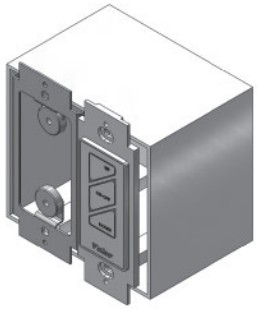

10. Place and secure cover plate to box using 4 screws provided

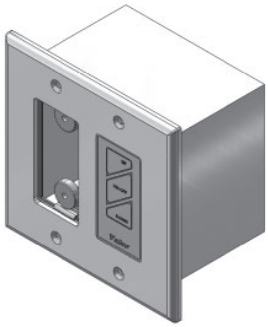

⚠ Caution

DO NOT USE a screwdriver or other metallic object to remove the batteries from the battery holder or the handset! This could cause a short circuit to the receiver.

To avoid short-circuit to the receiver, position the antenna so that it DOES NOT TOUCH the ignition wire.

11. Feed cable tie through the 2 side slots of battery cover assembly.
12. Position battery holder to rear face and secure together with cable tie. note clearance is required for battery snap connection.

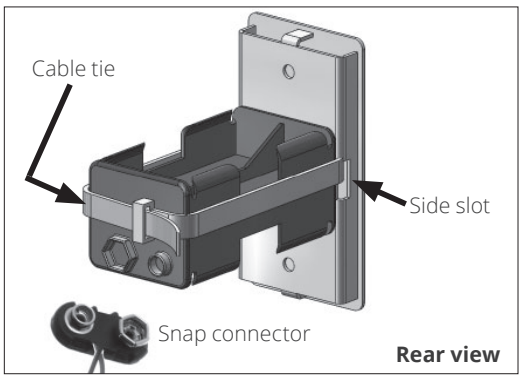

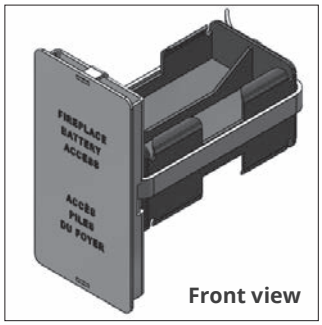

13. Make the snap connection, load 4 AA alkaline batteries into holder (included with fireplace) then feed back into junction box assembly.
Note: Do not put batteries in the receiver, only in the battery holder by the wall switch.

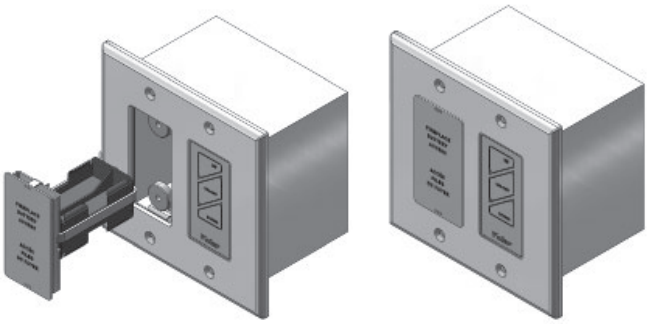

14. Test the operation of the wall switch—see ""Appendix C—Wall Switch Operation" on page 67.

Radio Frequency

918.0 MHz for USA and Canada.

This device complies with Part 15 of the FCC Rules and with Industry Canada license-exempt RSS standard(s). Operation is subject to the following two conditions:

(1) this device may not cause harmful interference, and

(2) this device must accept any interference received, including interference that may cause undesired operation.

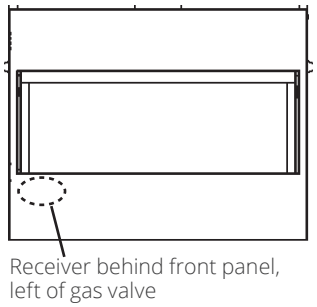

Remote Control Initial Pairing

The receiver and the handset of the remote control system must be initially paired before the first use. (Note that batteries must already be installed in the wall mounted battery holder)

1. Insert two 1.5 V AAA **alkaline** batteries in the handset.
2. Locate the Reset button on the front side of the receiver.
3. With a thin object, press and hold the receiver's RESET button until you hear one short and one long beeps. After the second beep, release the reset button.
4. Within the subsequent 20 seconds, press and hold the ▼ button on the remote handset for 2-3 seconds. COM will be displayed on the handset during the pairing sequence. You will hear two short beeps confirming the pairing is done.

If you hear one long beep, the pairing sequence has failed or the wiring is incorrect.

This is a one time pairing only and is not required when changing the batteries of the handset or battery holder. The remote control system is now ready to use.

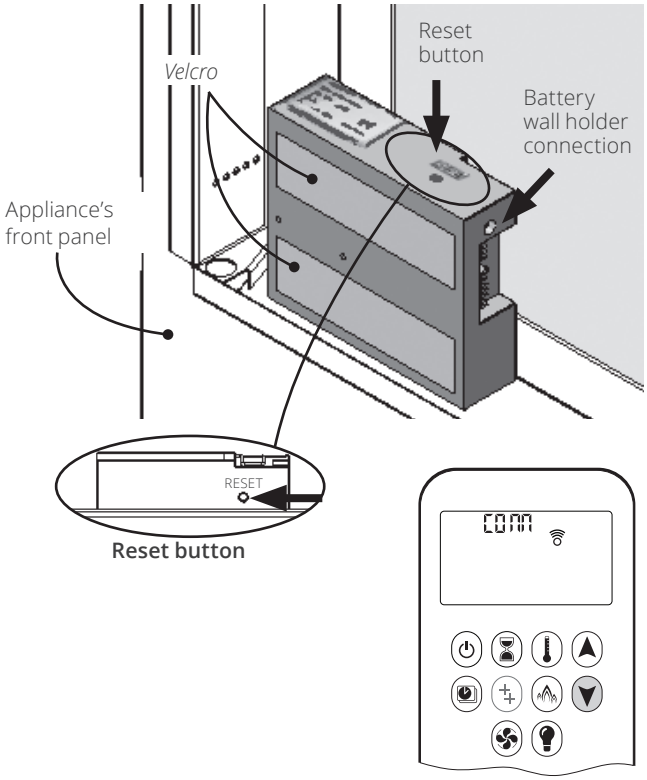

Install Remote Control Handset Wall Holder

The remote control kit for this fireplace comes complete with a wall-mounted holder. This holder is not required in all installations but is provided as an optional feature for those customers who wish to mount the remote handset to the wall.

To install the holder to the wall, find a convenient location and use the hardware provided with the kit. Cover the screws with the included caps to finish the mounting.

Once mounted, the holder is magnetic - simply place the remote gently into the holder.

IMPORTANT: The location of the remote control handset is important to assure proper temperature regulation. To obtain a constant temperature, we recommend that the handset should be **between 3 and 15 feet away from the appliance but not directly above it**. We also advise that the handset should be located away from any other heat source and not in direct sunlight as this may affect the temperature sensor located in the remote handset.

Checking Operation

Turn the fireplace flame up and down using the remote control to confirm that the full range of inputs is achieved—see the remote control operation instructions in “Appendix B—Remote Control Operation” on page 60.

Adjusting Aeration

Light the fire and allow the unit to warm up for 10–15 minutes to evaluate the flame picture. The burner is equipped with an adjustable shutter to control primary aeration. The shutter is factory-set to an aeration gap which will give optimum performance for the vast majority of installations.

Depending of the fuel bed used, altitude and other considerations, the flame picture may be improved by adjusting the aeration. The need for adjustment should be determined only by operating the appliance with the fuel bed, panels and window installed and evaluating the flame picture after a 15-minute warm-up.

Increasing aeration will cause the flames to appear more transparent and blue showing more ceramic effects glow.

Decreasing aeration will cause the flames to appear more yellow or orange showing less ceramic effects glow.

Too little aeration may result in black carbon forming on logs or roof panel and dropping into the firebox. May also result in carbon or soot stains on the vent termination and exterior wall around the termination! The Manufacturer is not responsible for for any damage caused by an air shutter setting with too little aeration.

Locating Aeration Control

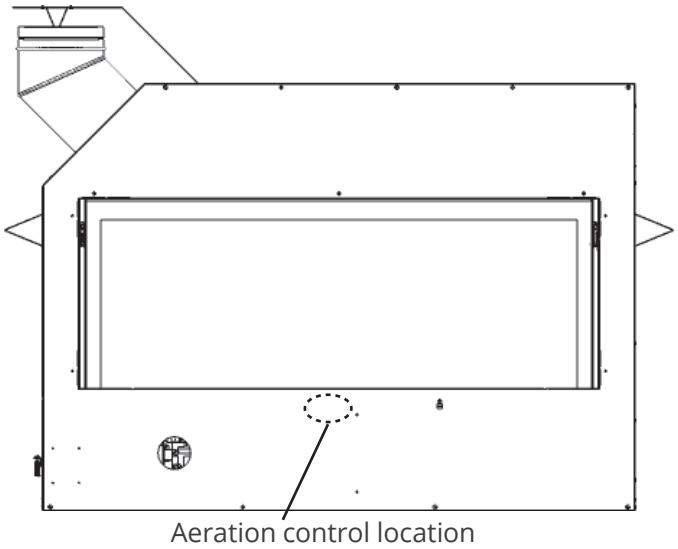

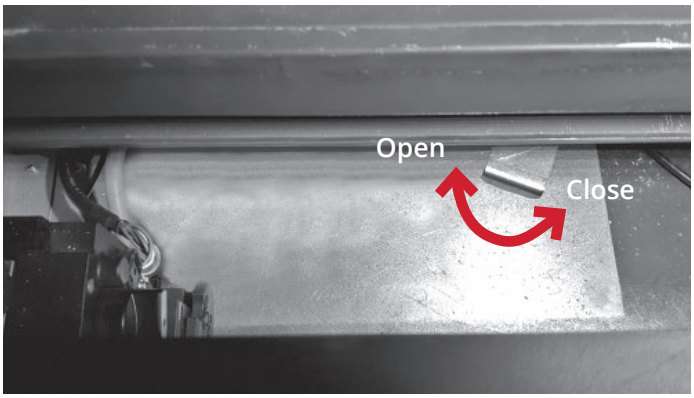

Top view—Air shutter lever located under the firebox behind the front panel

Install Trim and Barrier Screen

Install the trim chosen by the customer for their fireplace. Install as well the barrier screen which is provided with the trim.

Show the customer how to remove the barrier screen to access the controls.

Follow the instructions provided with the trim and leave those instructions behind for the customer's further reference.

1530CIK—Clean Installation Kit

If you are installing the 1530CIK Clean Installation Kit, you need to do it **BEFORE the cement board**.

1. Break off tabs from each corner of the fireplace's front opening (8 tabs, 2 at each corner). Bend tabs back and forth to break them, or cut them with tin snips as indicated in the kit's installation instructions.
2. Remove the internal convection baffle inside the appliance case, above the firebox. See "Remove Convection Baffles" on page 31 and "Appendix D—HeatShift System" on page 68

⚠ WARNING

HeatShift System MUST be installed on this appliance when using 1530CIK—Clean Installation Kit!

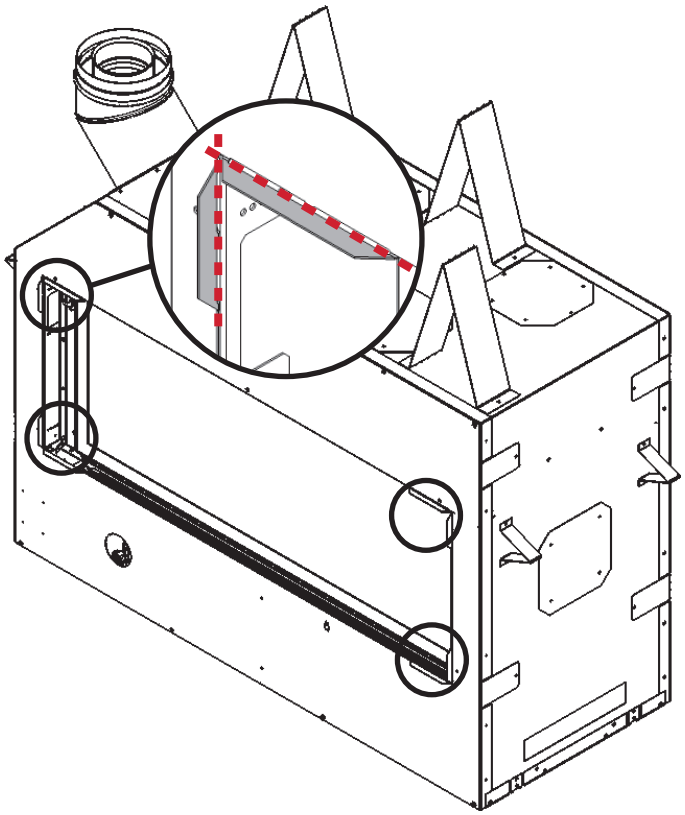

Wiring Diagram

GV60 Wiring Diagram

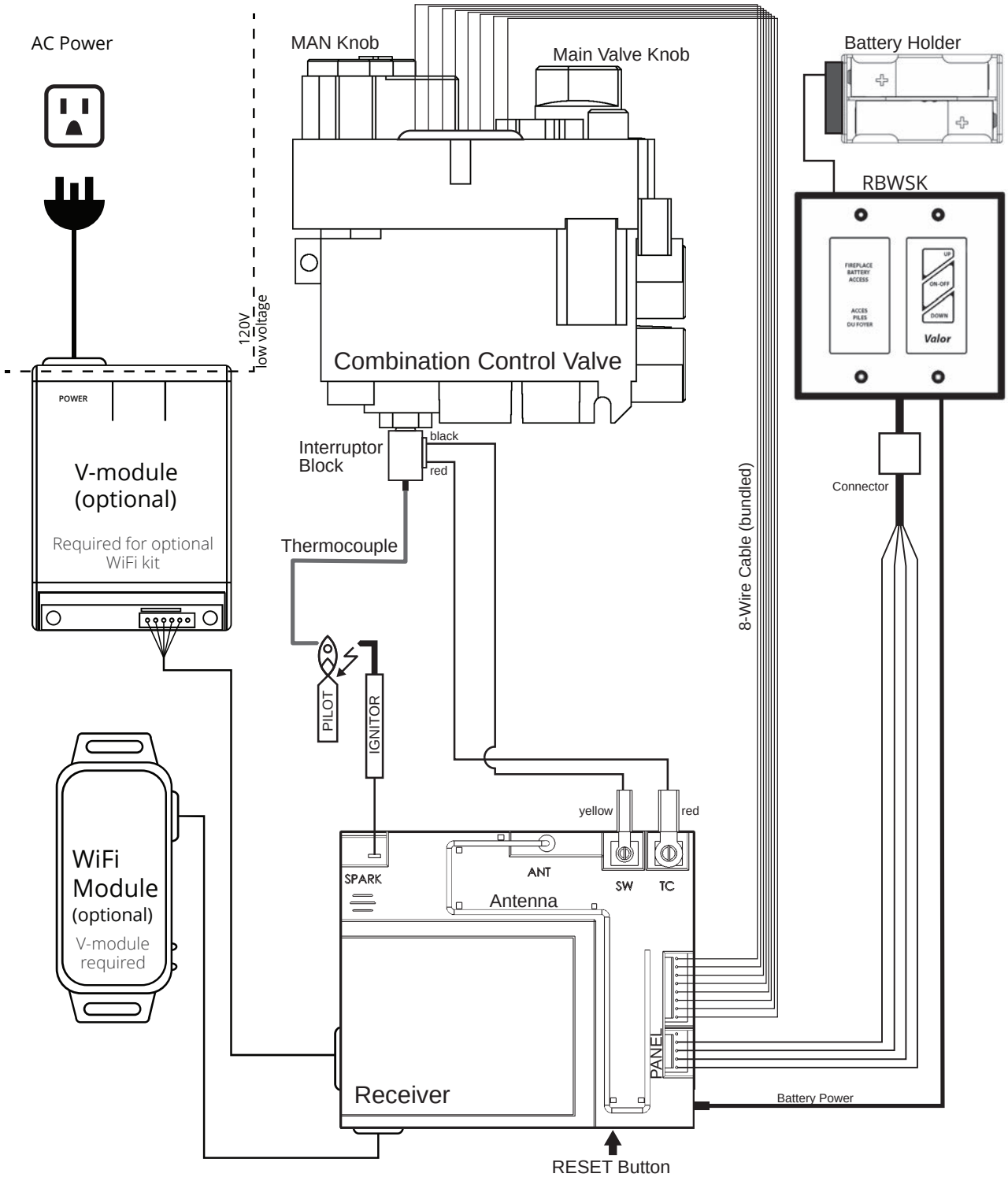

Commonwealth of Massachusetts

State of Massachusetts Carbon Monoxide Detector/Vent Terminal Signage Requirements

For all side wall horizontally vented gas fueled equipment installed in every dwelling, building or structure used in whole or in part for residential purposes, including those owned or operated by the Commonwealth and where the side wall exhaust vent termination is less than seven (7) feet above finished grade in the area of the venting, including but not limited to decks and porches, the following requirements shall be satisfied:

1. INSTALLATION OF CARBON MONOXIDE DETECTORS. At the time of installation of the side wall horizontal vented gas fueled equipment, the installing plumber or gas fitter shall observe that a hard wired carbon monoxide detector with an alarm and battery back-up is installed on the floor level where the gas equipment is to be installed. In addition, the installing plumber or gas fitter shall observe that a battery operated or hard wired carbon monoxide detector with an alarm is installed on each additional level of the dwelling, building or structure served by the side wall horizontal vented gas fueled equipment. It shall be the responsibility of the property owner to secure the services of qualified licensed professionals for the installation of hard wired carbon monoxide detectors.

a. In the event that the side wall horizontally vented gas fueled equipment is installed in a crawl space or an attic, the hard wired carbon monoxide detector with alarm and battery back-up may be installed on the next adjacent floor level.

b. In the event that the requirements of this subdivision can not be met at the time of completion of installation, the owner shall have a period of thirty (30) days to comply with the above requirements; provided, however, that during said thirty (30) day period, a battery operated carbon monoxide detector with an alarm shall be installed.

2. APPROVED CARBON MONOXIDE DETECTORS. Each carbon monoxide detector as required in accordance with the above provisions shall comply with NFPA 720 and be ANSI/UL 2034 listed and IAS certified.

3. SIGNAGE. A metal or plastic identification plate shall be permanently mounted to the exterior of the building at a minimum height of eight (8) feet above grade directly in line with the exhaust vent terminal for the horizontally vented gas fueled heating appliance or equipment. The sign shall read, in print size no less than one-half (1/2) inch in size, “GAS VENT DIRECTLY BELOW. KEEP CLEAR OF ALL OBSTRUCTIONS”.

4. INSPECTION. The state or local gas inspector of the side wall horizontally vented gas fueled equipment shall not approve the installation unless, upon inspection, the inspector observes carbon monoxide detectors and signage installed in accordance with the provisions of 248 CMR 5.08(2)(a)1 through 4.

(b) EXEMPTIONS: The following equipment is exempt from 248 CMR 5.08(2)(a)1 through 4:

1. The equipment listed in Chapter 10 entitled “Equipment Not Required To Be Vented” in the most current edition of NFPA 54 as adopted by the Board; and

2. Product Approved side wall horizontally vented gas fueled equipment installed in a room or structure separate from the dwelling, building or structure used in whole or in part for residential purposes.

(c) MANUFACTURER REQUIREMENTS - GAS EQUIPMENT VENTING SYSTEM PROVIDED. When the manufacturer of Product Approved side wall horizontally vented gas equipment provides a venting system design or

venting system components with the equipment, the instructions provided by the manufacturer for installation of the equipment and the venting system shall include:

1. Detailed instructions for the installation of the venting system design or the venting system components; and

2. A complete parts list for the venting system design or venting system.

(d) MANUFACTURER REQUIREMENTS - GAS EQUIPMENT VENTING SYSTEM NOT PROVIDED. When the manufacturer of a Product Approved side wall horizontally vented gas fueled equipment does not provide the parts for venting the flue gases, but identifies “special venting systems”, the following requirements shall be satisfied by the manufacturer:

1. The referenced “special venting system” instructions shall be included with the appliance or equipment installation instructions; and

2. The “special venting systems” shall be Product Approved by the Board, and the instructions for that system shall include a parts list and detailed installation instructions.

(e) A copy of all installation instructions for all Product Approved side wall horizontally vented gas fueled equipment, all venting instructions, all parts lists for venting instructions, and/or all venting design instructions shall remain with the appliance or equipment at the completion of the installation.

Appendix A—Lighting Instructions

FOR YOUR SAFETY, READ BEFORE LIGHTING

WARNING: If you do not follow these instructions exactly a fire or explosion may result causing property damage, personal injury or loss of life.

A. This appliance has a pilot which must be lighted by hand or by remote control. Follow these instructions exactly. To save gas, turn the pilot off when not using the appliance for a prolonged period of time.

B. BEFORE LIGHTING, smell all around the appliance area for gas. Be sure to smell next to the floor because some gas are heavier than air and will settle on the floor.

WHAT TO DO IF YOU SMELL GAS

- Do not try to light any appliance.
- Do not touch any electric switch; do not use any phone in your building.
- Immediately call your gas supplier from a neighbor's phone. Follow the gas supplier's instructions.
- If you cannot reach your gas supplier, call the fire department.

C. Use only your hand to push in or turn the control knobs. Never use tools. If the knobs will not push in or turn by hand, don't try to repair them; call a qualified service technician. Force or attempted repair may result in a fire or explosion.

D. Do not use this appliance if any part has been under water. Immediately call a qualified service technician to inspect the appliance and to replace any part of the control system and any gas control, which has been under water.

LIGHTING INSTRUCTIONS

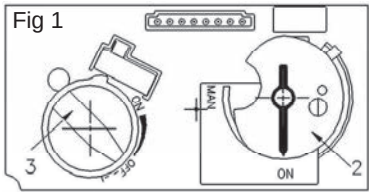

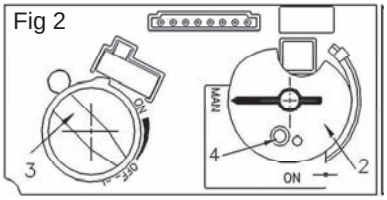

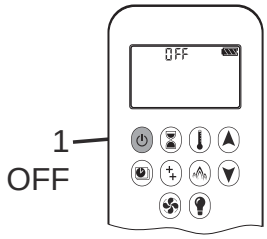

1. STOP! Read the safety information above

2. TO CLEAR ANY GAS, turn main valve off by pressing the button on remote handset (1). Wait five (5) minutes to clear out any gas, then smell for gas, including near the floor. If you smell gas,STOP! follow "B" in the safety information above on this label. If you don't smell gas, go to the next step.

3. AUTOMATIC IGNITION: MAN-knob (2) in ON position. Ensure Flame Adjustment knob (3) is set to lowest setting (Fig. 1). Locate the pilot (Fig. 3.) inside the firebox.
On the remote control handset, press the button; a short acoustic signal confirms the start has begun. Further short acoustic signals indicate the ignition process is in progress When the pilot is lit, the Flame Adjustment knob (3) will automatically rotate to the highest setting. Press the button on the remote control handset to reduce the flame height.

4. MANUAL IGNITION: MAN-knob (2) in MAN position (Fig. 2).
With the window off, locate the pilot (Fig. 3) inside the firebox. Set Flame Adjustment knob (3) to the lowest setting. Push down the metallic core (4) with a pen or similar instrument; this will establish the pilot gas flow. Light gas at the pilot (5) with a match. Continue holding down metal core (4) for about 10 seconds; after release, pilot should remain lit. If the pilot will not stay lit after several tries, turn the gas control knob (3) to OFF and call your local service technician or gas supplier. Reinstall the window and set the MAN-knob (2) to ON; turn Flame Adjustment knob (3) up or down manually or use the and buttons on the remote control handset to adjust the flame height.

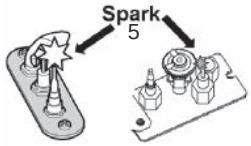

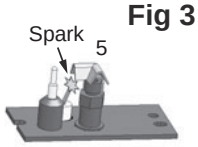

Fig 3

TO TURN OFF GAS TO APPLIANCE

AUTOMATIC SHUT-OFF (using the remote control handset):
Press and hold the button on the remote control handset to shut-off the main burner gas flow.
Press the button on remote handset to shut-off the appliance, including pilot flame.

Appendix B—Remote Control Operation

Initial Pairing

Before the remote control can be used with the fireplace, it must be paired. See “Remote Control Initial Pairing” on page 52.

Main Display and Remote Handset

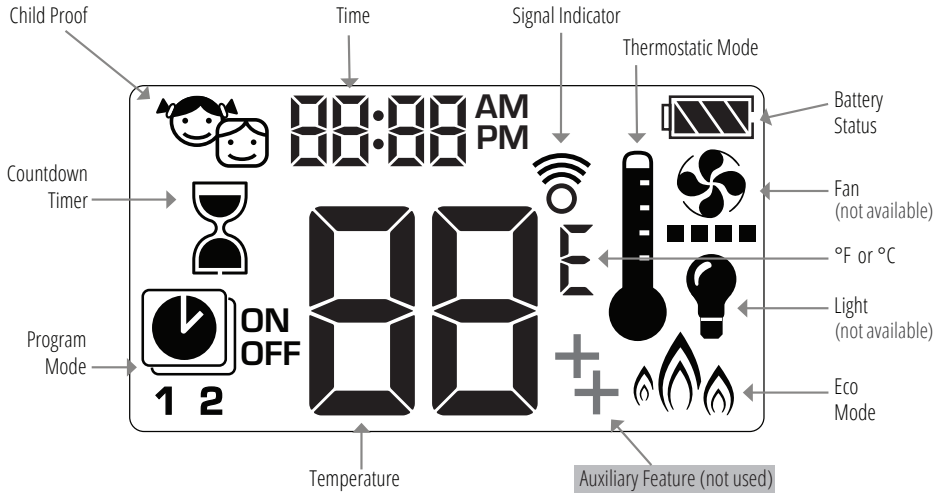

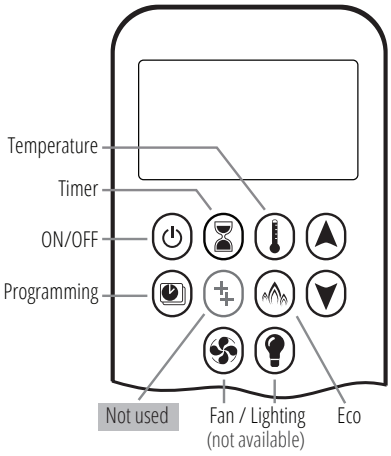

To Turn On Fire

NOTE: When pilot ignition is confirmed, motor automatically turns to maximum flame height.

One-Button lighting (default): ⏻
Two-Button lighting: ⏻ + ▲ simultaneously

Press and hold for 4 seconds, until 8 short beeps and a blinking series of lines confirms the start sequence has begun. Release button.

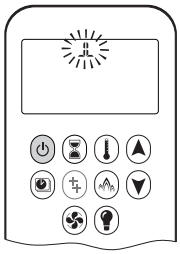

Main gas flows once pilot ignition is confirmed.

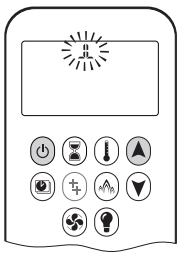

Handset automatically goes into manual mode after main burner ignition.

Standby Mode (Pilot Flame)

Press and hold ▼ to set appliance to pilot flame.

CAUTION: If the pilot does not stay lit after several tries call your local service technician or gas supplier.

To Turn Off Fire

Press ⏻ to turn OFF.

Note: There is a 2 minute delay after switching off before the next ignition is possible.

CAUTION: Always check the fire and pilot visually to ensure they are off.

Flame Height Adjustment

To increase flame height, press and hold ▲.

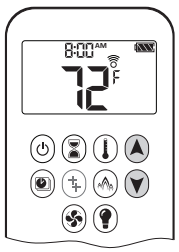

To decrease flame height, press and hold ▼. You may hold the button down until the fire is set to pilot flame only.

Appendix B—Remote Control Operation

Designated Low Fire and High Fire

To go to low fire, double-click ▼. "LO" is displayed.

Note: Flame goes to high fire first before going to low fire.

To go to high fire, double-click ▲. "HI" is displayed.

Choosing 1-Button or 2-Button Ignition

On the remote control handset, you can choose a 1-button or 2-button ignition. You can also choose to activate or deactivate some of the functions. By default, the handset is set to a 1-button ignition.

To change from 1-button to 2-button ignition, remove the batteries, wait 10 seconds, reinsert batteries, and immediately when the display flashes, press and hold the ⏻ button for 10 seconds. **ON** is displayed and **1** is flashing. When change is complete, **1** changes to **2**.

To change from 2-button to 1-button ignition, proceed the same as above. **ON** is displayed and **2** is flashing. When change is complete, **2** changes to **1**.

Deactivating or Activating Functions

These functions are active by default, but can be deactivated at any time:

- Child Proof
- Program Mode
- Thermostatic Mode
- Eco Mode
- Circulating Fan Operation
- Countdown Timer

NOTE: The function Auxiliary Feature is not used.

To deactivate functions:

1. Install batteries. All icons are displayed and flashing.
2. While the icons are flashing, press the relevant function button and hold for 10 seconds.
3. The function icon will flash until deactivation is complete. Deactivation is complete when the function icon and two horizontal bars (▬ ▬) are displayed.

Note: If a deactivated button is pressed, there is no function, and the two horizontal bars are displayed.

To activate functions:

1. Install batteries. All icons are displayed and flashing.
2. While the icons are flashing, press the relevant function button and hold for 10 seconds.
3. The function icon will continue to flash until activation is complete, and then turn solid. Activation is complete when the function icon is displayed.

Setting Celsius or Fahrenheit

To change between °C and °F, press and hold ⏻ + ⌛ simultaneously.

Note : °C = 24-hour clock
°F = 12-hour clock

Setting the Time

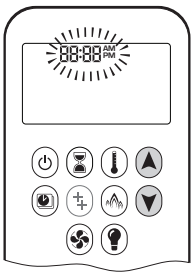

1. Press ▲ + ▼ simultaneously. **Day** flashes.
2. Press ▲ + ▼ to select a number to correspond with the day of the week.
   - 1 = Monday
   - 2 = Tuesday
   - 3 = Wednesday
   - 4 = Thursday
   - 5 = Friday
   - 6 = Saturday
   - 7= Sunday
3. Press ▲ + ▼ simultaneously. **Hour** flashes.
4. To select hour press ▲ or ▼.
5. Press ▲ + ▼ simultaneously. **Minutes** flash.
6. To select minutes press ▲ or ▼.
7. To confirm, press ▲ + ▼ simultaneously or wait.

Appendix B—Remote Control Operation

Child Proof

Your handset can be set to lock out all commands to the fireplace, except OFF.

To turn Child Proof ON:

1. Press and hold ⏻ + ▼ simultaneously.
2. is displayed. Child Proof is now active.

To turn Child Proof OFF:

1. Press and hold ⏻ + ▼ simultaneously.
2. disappears. Child Proof is now inactive, and the handset has full function.

Countdown Timer

You can set your fireplace to automatically turn off at the end of a timer.

To set a Countdown Timer:

1. Press and hold ⌛ until ⌛ is displayed. **Hour** flashes.
2. Press ▲ or ▼ to select Hour.
3. To confirm, press ⌛. **Minutes** flash.
4. Press ▲ or ▼ to select Minutes.
5. To confirm, press ⌛ or wait.

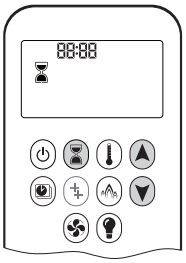

To turn off a Countdown Timer:

1. Press ⌛, and the ⌛ countdown disappears.

Note: The Countdown Timer only works in Manual, Thermostatic, and Eco modes. Maximum countdown time is 9 hours and 50 minutes.

Light/Dimmer Operation (not available)

Circulating Fan Operation (not available)

Appendix B—Remote Control Operation

Modes of Operation

Thermostatic Mode

The room temperature is measured and compared to the set temperature. The flame height is automatically adjusted to achieve the set temperature.

Program Mode

The temperature is controlled by Programs 1 and 2, each of which can be set to go on and off at specific times, at a set temperature.

Eco Mode

Flame height modulates between high and low. If the room temperature is lower than the set temperature, the flame height stays on high for a longer period of time. If the room temperature is higher than the set temperature, the flame height stays on low for a longer period of time. One cycle lasts approximately 20 minutes.

If any of the above modes (Thermostatic, Program, or Eco) are engaged by the MyFire app over WiFi, the handset will display **APP**.

Manual Mode

The on/off status of the fireplace, as well as flame height, are manually controlled by the user.

Thermostatic Mode

On:

Press . is displayed. Preset temperature displays briefly, followed by the room temperature.

Setting Desired Temperature:

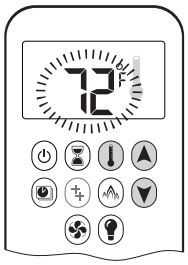

1. Press and hold until is displayed and set temperature flashes.
2. To adjust set temperature, press or .
3. To confirm, press or wait.

Off:

1. Press .
2. Press or to go to Manual Mode.
3. Press to go to Program Mode.
4. Press to go to Eco Mode.

Program Mode

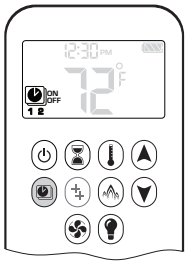

On:

Press .
, **1** or **2**, **ON** or **OFF** are displayed.

Off:

1. Press , , or to go to Manual Mode.
2. Press to go to Thermostatic Mode.
3. Press to go to Eco Mode.

Note: The set temperature for Thermostatic Mode is the temperature for the ON time in Program Mode. Changing the Thermostatic Mode set temperature also changes the ON time temperature in Program Mode.

Default Settings:

- ON TIME (Thermostatic) TEMPERATURE: 70°F / 21°C
- OFF TIME TEMPERATURE: "– –" (pilot flame only)

Appendix B—Remote Control Operation

Temperature Setting:

1. Press and hold ⏲ until 🕒 flashes. **ON** and set temperature (set in Thermostatic Mode) is displayed.
2. To continue, press ⏲ or wait. 🕒, **OFF** displayed, temperature flashes.
3. Select off temperature by pressing ▲ or ▼.
4. To confirm, press ⏲.

Note: The on (Thermostatic) and off set temperatures are the same for each day.

Day Setting:

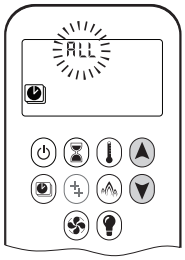

1. **ALL** flashes. Press ▲ or ▼ to choose between:
   - **ALL** = same settings ON-OFF every day
   - **SA:SU** = same settings ON-OFF Saturday and Sunday
   - **1, 2, 3, 4, 5, 6, 7** = daily timer—unique ON-OFF settings for a single day of the week, for multiple days of the week or for every day of the week.
2. To confirm, press ⏲.

ALL Selected (same settings every day)

On Time Setting (PROGRAM 1)

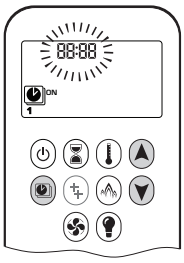

1. 🕒, **1, ON** are displayed. **ALL** is displayed briefly. Hour flashes.
2. To select hour, press ▲ or ▼.
3. To confirm, press ⏲. 🕒, **1, ON** are displayed. **ALL** displayed briefly. Minutes flash.
4. To select minutes, press ▲ or ▼.
5. To confirm, press ⏲.

Off Time Setting (PROGRAM 1)

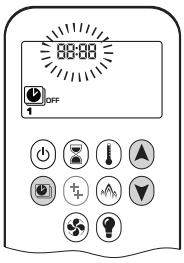

1. 🕒, **1, OFF** are displayed. **ALL** is displayed briefly. Hour flashes.
2. To select hour, press ▲ or ▼.
3. To confirm, press ⏲. 🕒, **1, OFF** are displayed. **ALL** displayed briefly. Minutes flash.
4. To select minutes, press ▲ or ▼.
5. To confirm, press ⏲.

Note: Either continue to PROGRAM 2 and set ON and OFF times or stop programming at this point, and PROGRAM 2 remains deactivated.

Note: PROGRAM 1 and 2 use the same ON (Thermostatic) and OFF temperatures. Once a new ON (Thermostatic) and/or OFF temperature has been set, that temperature becomes the new default setting. **Note:** ON and OFF times programmed for PROGRAM 1 and PROGRAM 2 become the new default times.

The batteries must be removed to clear the PROGRAM 1 and PROGRAM 2 ON and OFF times and temperatures.

SA:SU (same settings Saturday and Sunday) or 1, 2, 3, 4, 5, 6, 7 (different settings on different days)

- Set on time and off time using the same procedure as "ALL Selected" above.
- Waiting to finish setting.

Eco Mode

On:

Press 🔥 button to enter Eco Mode. 🔥 is displayed.

Flame height modulates between high and low every 20 minutes.

Off:

Press 🔥 button to exit Eco Mode. 🔥 disappears.

Appendix B—Remote Control Operation

Low Battery Indication

⚠ **CAUTION:** Do not use a screwdriver or other metallic object to remove the batteries from the battery holder or the handset. This could cause a short circuit.

Handset

The battery icon will show when the battery needs to be replaced. Replace with two 1.5 V AAA alkaline batteries.

Receiver

Frequent beeps for 3 seconds when the motor turns indicate the batteries in the battery holder need to be replaced. Replace with four 1.5 V AA alkaline batteries.

Automatic Shut Off

Countdown Timer

At the end of countdown time period, the fire turns off. The Countdown Timer only works in Manual, Thermostatic, and Eco Modes. Maximum countdown time is 9 hours and 50 minutes.

Low Battery Receiver

With low battery power in the battery holder, the system shuts off the fire completely. (This will not happen if the power is completely interrupted.)

Seven Day Shut Off

The system shuts off the fire completely if there is no change in flame height for 7 days.

Automatic Turn Down

3 Hour No Communication Function

The valve will turn to pilot flame if there is no communication between the handset and receiver for a 3-hour period. The fire will continue to function normally when communication is restored.

Radio Frequency

918.0 MHz for USA and Canada.

This device complies with Part 15 of the FCC Rules and with Industry Canada license-exempt RSS standard(s). Operation is subject to the following two conditions:

(1) this device may not cause harmful interference, and

(2) this device must accept any interference received, including interference that may cause undesired operation.

Appendix B—Remote Control Operation

Error Codes

In the event of an error condition with the handset or fireplace, the handset will display an error code.

Failure Code	Message on Handset	Duration of Display	Symptom	Possible Cause
F04	F04	4 sec	• No pilot flame within 30 sec • **Note:** after 3 failed ignition sequences, F06 shown	• No gas supply • Air in pilot supply line • No spark • Reversed polarity in thermocouple wiring
F06	F06	4 sec	• 3 failed ignition sequences in 5 minutes • Fire is not responding, no pilot flame	• No gas supply • Air in pilot supply line • No spark • Reversed polarity in thermocouple wiring • Incorrect pilot orifice if valve has been converted from LPG to NG or vice versa
F07	Low battery symbol	Permanent	• Battery icon flashes on handset display	• Low battery in handset
F09	F09	4 sec	• Fire is not responding • No electronic control of fire	• Down arrow button ▼ was not pressed during pairing • Receiver and handset are not synced
F46	F46	4 sec	• Fire is not responding • Intermittent response • No electronic control of fire	• No or bad connection between receiver and handset • No power at receiver (batteries low) • Low communication range (mains adapter faulty, handset not communicating with receiver)

Appendix C—Wall Switch Operation

The Wall Switch can be used to control your fireplace. You can turn the pilot on or off and you can increase or decrease the flame height.

Note that the thermostat and programming functions are not available with the wall switch.

Adjusting Flame Height

Press and hold large flame button to gradually increase flame height.

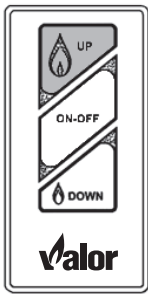

Turning Appliance ON and OFF

Press ON-OFF button once to light pilot. Press again to shut off pilot.

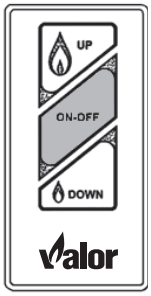

Press and hold small flame button to gradually decrease flame height.

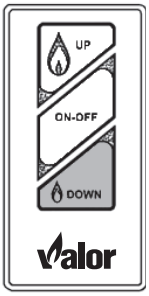

Appendix D—HeatShift System

HeatShift™ System

Planning Installation: Linear with HeatShift™

Instructions for use with the following **Valor Heater Models: 1500, 1600, 1700 and 1800 J or K**

Application

The HeatShift™ system redistributes the warm air flow away from the fireplace opening to a more desirable location using natural convection without use of a fan.

Plenums LKD1, LDK3, LDK4 or LDK9: the warm air flow is relocated to a position higher up the wall, out the sidewalls, or even to an adjacent room.
Termination Plates LDK7: the warm air flow is discharged through a gap (min. 2-1/2" [64 mm]) between the wall above the fireplace and the ceiling. **LDK7's discharge opening must be located in the same room as the fireplace.**
The result is much cooler wall temperatures above the fireplace opening for locating televisions, artwork, etc.

The 1595CFK or 1595CFKV2 Circulating Fan Kit are not recommended when installing the HeatShift system.

Any kit, LDK1, LDK3, LDK4, LDK7 or LDK9 may be used with compatible model fireplaces L1, L2 or L3 listed above.

As a further option, the warm airflow may be extracted away from the duct kit plenum **(LDK1 and LDK4 ONLY)** by connecting a 1270RBK HeatSplit Remote Blower Kit to the duct kit plenum.

This kit is compatible with the listed fireplaces only. Earlier version fireplaces will not accept the addition of this kit.

Note: These instructions are to be used in conjunction with instructions regarding fireplace installation in this manual.

⚠ WARNING

When placing discharge close to ceilings, staining or streaking may occur on light colored ceilings due to any dust, etc. in air flow; placing plenum(s) lower on the wall will help reduce the possibility of staining or streaking.

The use of this kit will permit lower mantel clearances to be used—see *Combustible Mantel Clearances* in this Appendix. These lower mantel clearances **must ONLY be used when the HeatShift system is installed and the internal convection baffle has been removed**.

Approvals

The LDK1, LDK3, LDK4, LDK7 and LDK9 duct kits are CSA approved for use only with Valor Series fireplaces listed above—DO NOT use with any other models.

This HeatShift system may also be used to reduce wall surface temperatures on approved outdoor installations.

5-inch [127 mm] diameter duct used with this kit must be metal and meet requirements of UL-181 Class 1 Air Duct. Flexible aluminum duct is acceptable provided it meets the UL-181 Class 1 requirements.

⚠ WARNING

All fireplaces listed above require the removal of the internal convection baffle for this system to function properly—read instructions carefully!

⚠ WARNING

DO NOT cover or place objects in front of or on top of air outlet(s). AVOID locating outlet within 7 feet [2134 mm] above floor level as discharge temperatures are hot!

NOTE—Sprinklers

Depending on room temperature, HeatShift air discharge temperatures can be in the range of 210 °F (99 °C). Please refer to local building code, choose appropriate sprinkler heads and place them accordingly.
See Framing and Clearances pages.

Appendix D—HeatShift System

Kits

There are 5 kits to choose from:

- LDK1— Plenum, 48” [1220 mm]
- LDK3— Plenums (2), includes grilles, 14” [356 mm]
- LDK4— Plenum, 38” [966 mm]
- LDK7— Duct Termination Plates (2)—for wall valance discharge ONLY
- LDK9— Plenum, 30” [762 mm]

Kits Contents

LDK1
48” x 2”
1220 x 51 mm

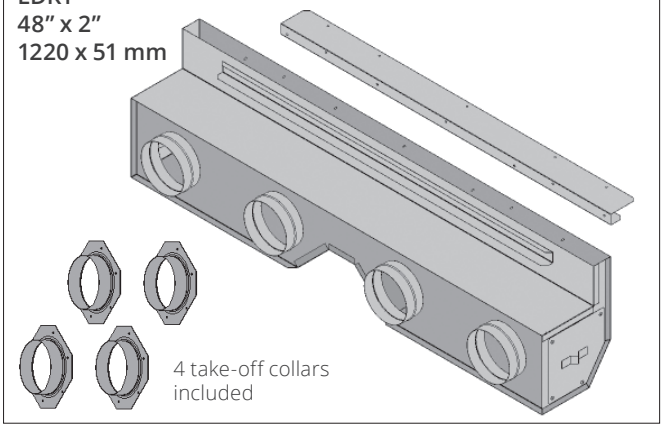

LDK4
38” x 2”
966 x 51 mm

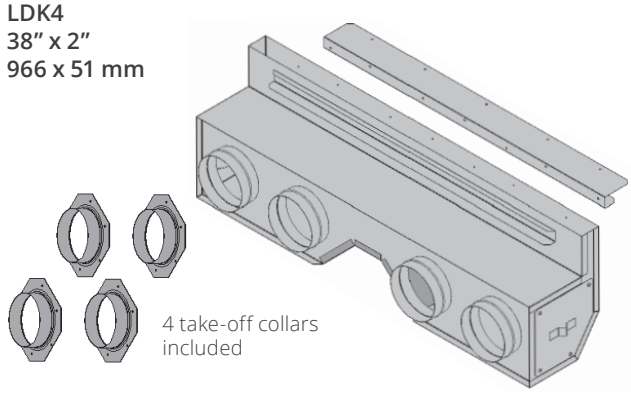

LDK3
2 - 14” x 6”
256 x 153 mm

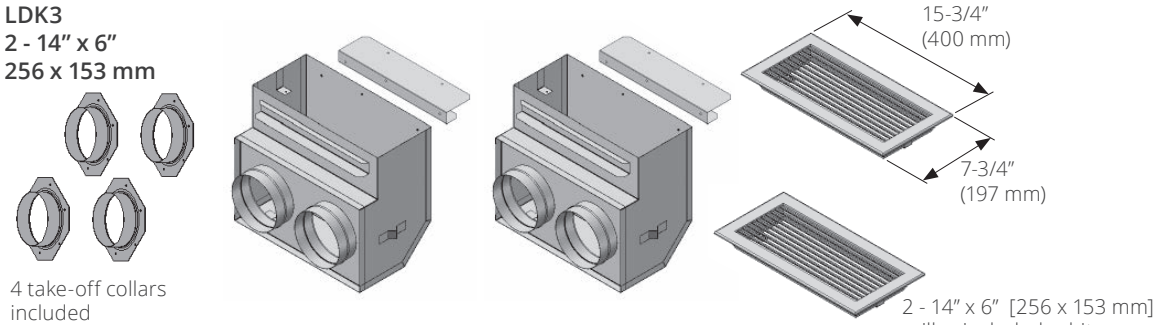

LDK7
2 Duct termination plates

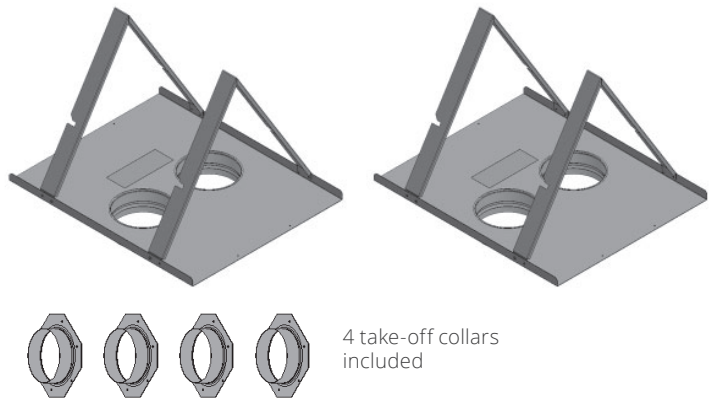

LDK9
30” x 2”
762 x 51 mm

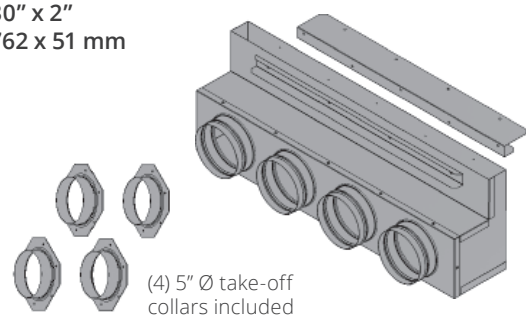

Appendix D—HeatShift System

Optional accessories

- LDK2—48” [1220 mm] Finishing Frame, to use with LDK1
- LDK5—38” [966 mm] Finishing Frame, to use with LDK4
- LDK6— 5” [127 mm] dia Aluminum 2-ply Flex Kit—
  2 x 10’–0” [3048 mm] lengths, may be cut to required length
- LDK10—30” [732 mm] Finishing Frame, to use with LDK9

Kits Contents

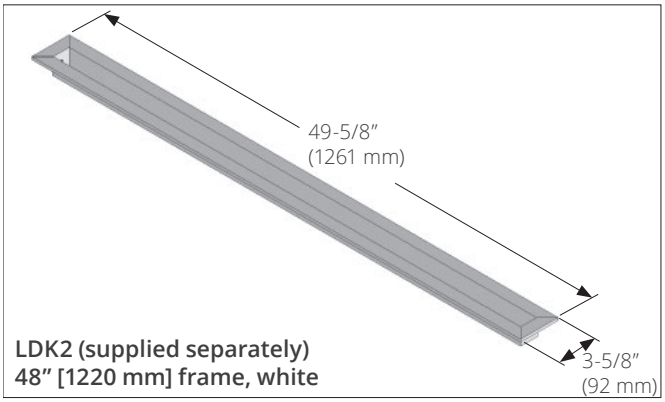

LDK2 (supplied separately)
48” [1220 mm] frame, white

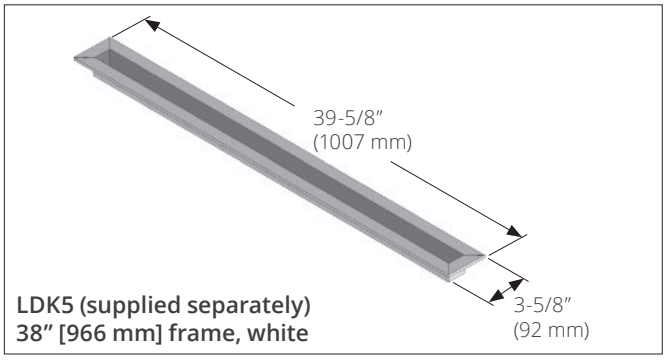

LDK5 (supplied separately)
38” [966 mm] frame, white

LDK6
2 - 10’ x 5” (aluminum flex)
3048 x 127 mm

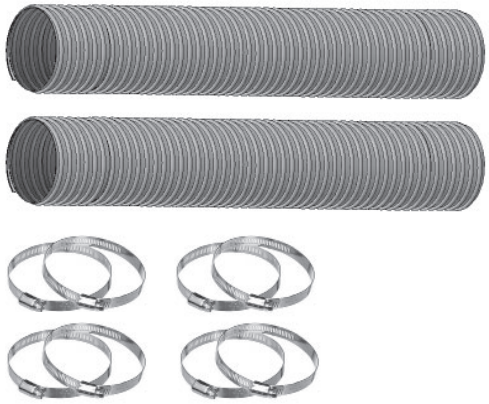

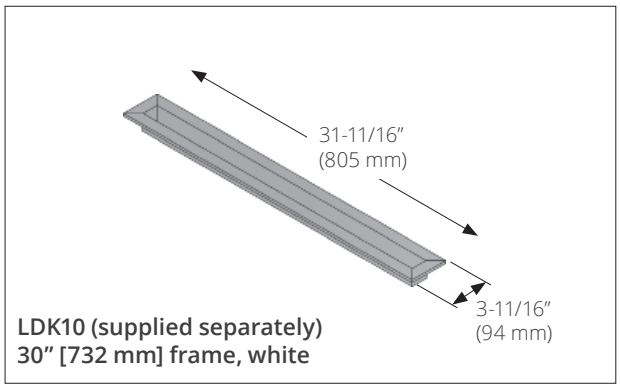

LDK10 (supplied separately)
30” [732 mm] frame, white

Appendix D—HeatShift System

Suggested Configurations

Not to scale

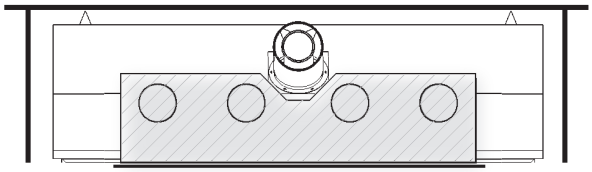

Front wall outlet using LDK1, LDK4 or LDK9

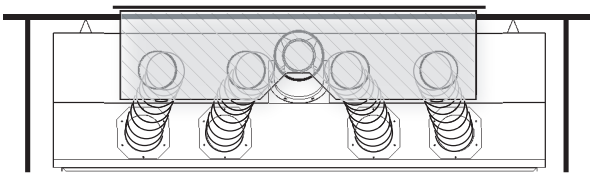

Rear wall outlet using LDK1, LDK4 or LKD9
Note: Fireplace vent may conflict with plenum.
Offset vent around plenum.

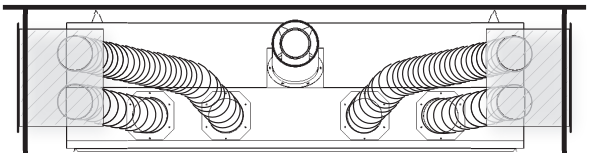

Side wall outlets using LDK3

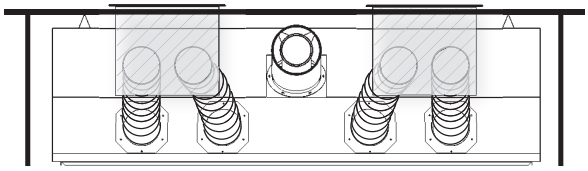

Rear wall outlets using LDK3

Note: Vertical venting straight off 1600K heater will NOT clear 38" (LDK4) or 48" (LDK1) plenums without offsetting vent around plenum.

Note: Take-off collars staggered, 2 per side

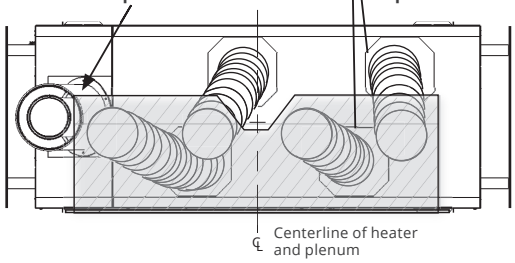

1600K L1 see-thru using LDK1, LDK4 or LDK9

Note - When using LDK7, the discharge opening must be located in the same room as the fireplace.

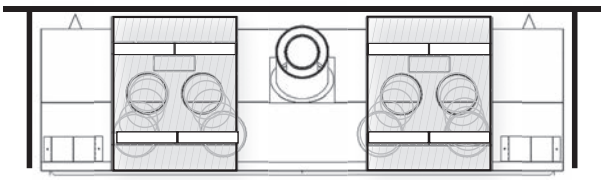

With LDK7

Corner installations

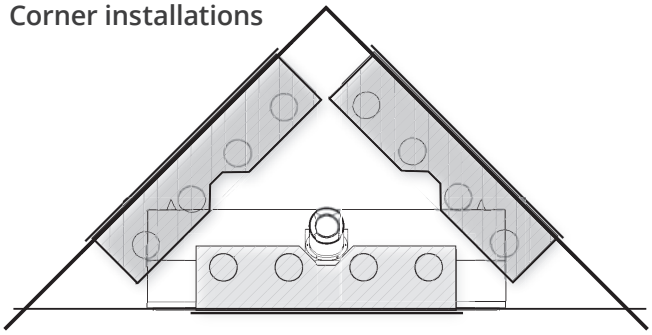

⚠ WARNING

The plenum duct kits are approved for horizontal discharge ONLY. The termination duct plates are approved for vertical upward discharge ONLY. DO NOT install plenum or termination plates in floor or ceiling. DO NOT COVER OR PLACE objects in front of or on top of air outlet(s). AVOID locating outlet within 7 feet [2134 mm] of the floor level as discharge air temperatures are hot!

DO NOT DISCHARGE THROUGH EXTERIOR WALLS!

NOTE This duct kit may also be used for outdoor installations where reduced wall surface temperatures above the unit are desired. The discharge grilles must be located under the weatherproof enclosure described in the GV60CKO Outdoor Fireplace Conversion Kit instructions.

Appendix D—HeatShift System

Overview (applies to LKD1, LDK3, LDK4 and LDK9 kits)

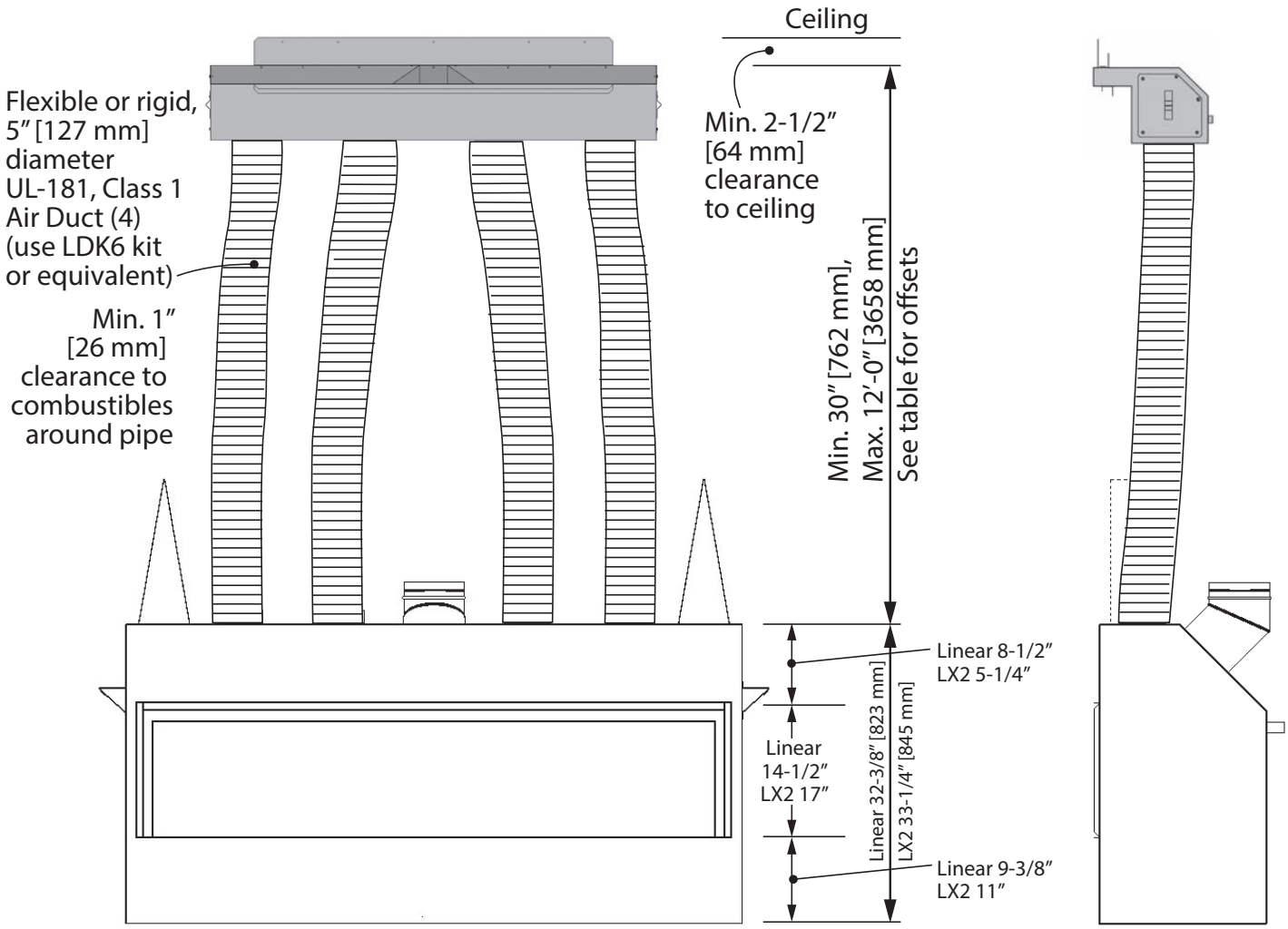

Appendix D—HeatShift System

Overview (applies to LDK7)

NOTE Discharge opening must be located in the same room as fireplace when using LDK7.

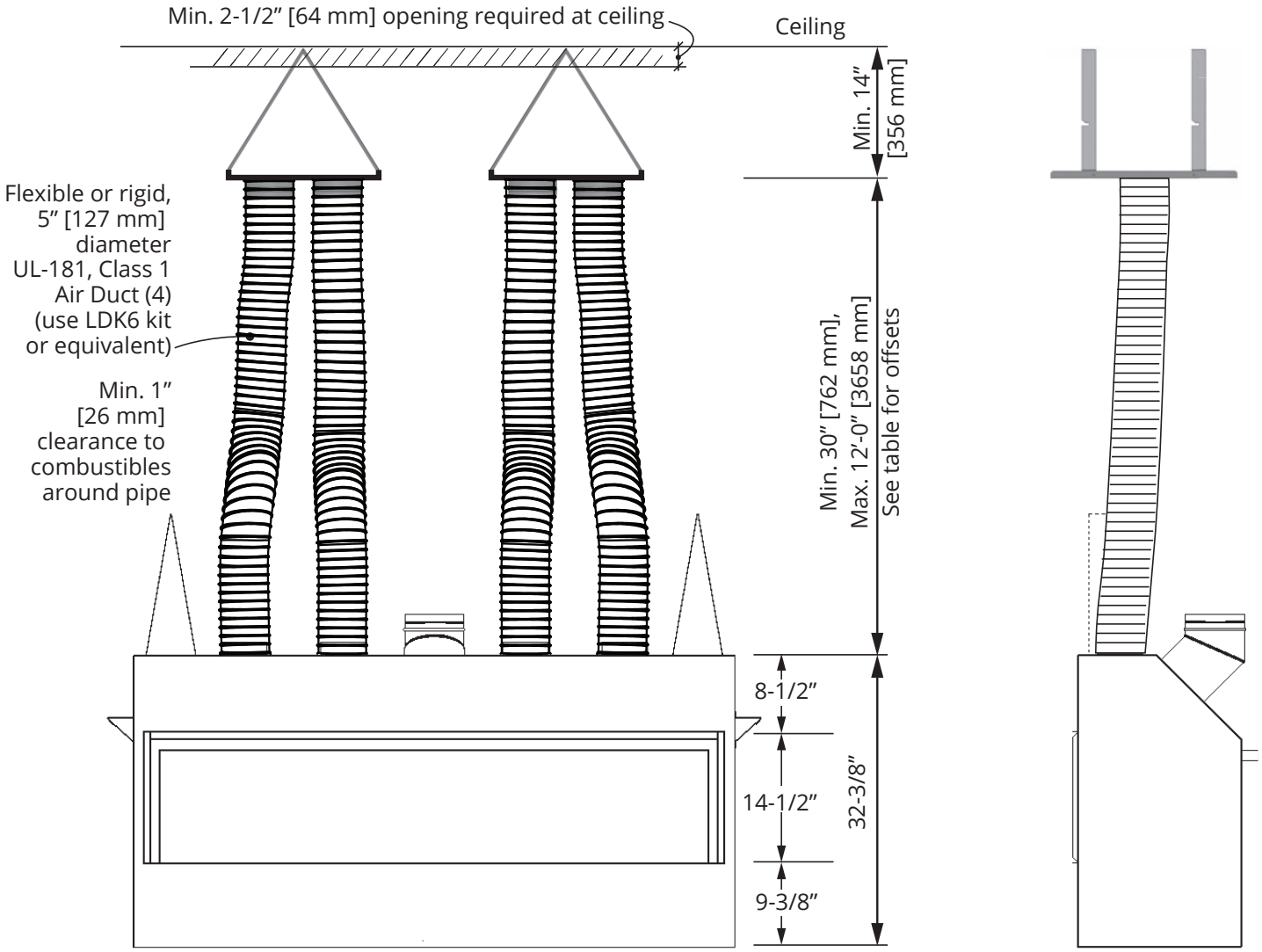

Appendix D—HeatShift System

Y Vertical Rise	X Max. Allowable Horizontal Offset
30″ 762 mm	24″ 610 mm
36″ 914 mm	36″ 914 mm
42″ 1067 mm	48″ 1219 mm
48″ 1219 mm	60″ 1524 mm
54″ 1372 mm	72″ 1829 mm
60″ 1524 mm	84″ 2134 mm
66″ 1676 mm	96″ 2438 mm
12′-0″ 3.7 m	96″ Max.

With Plenum

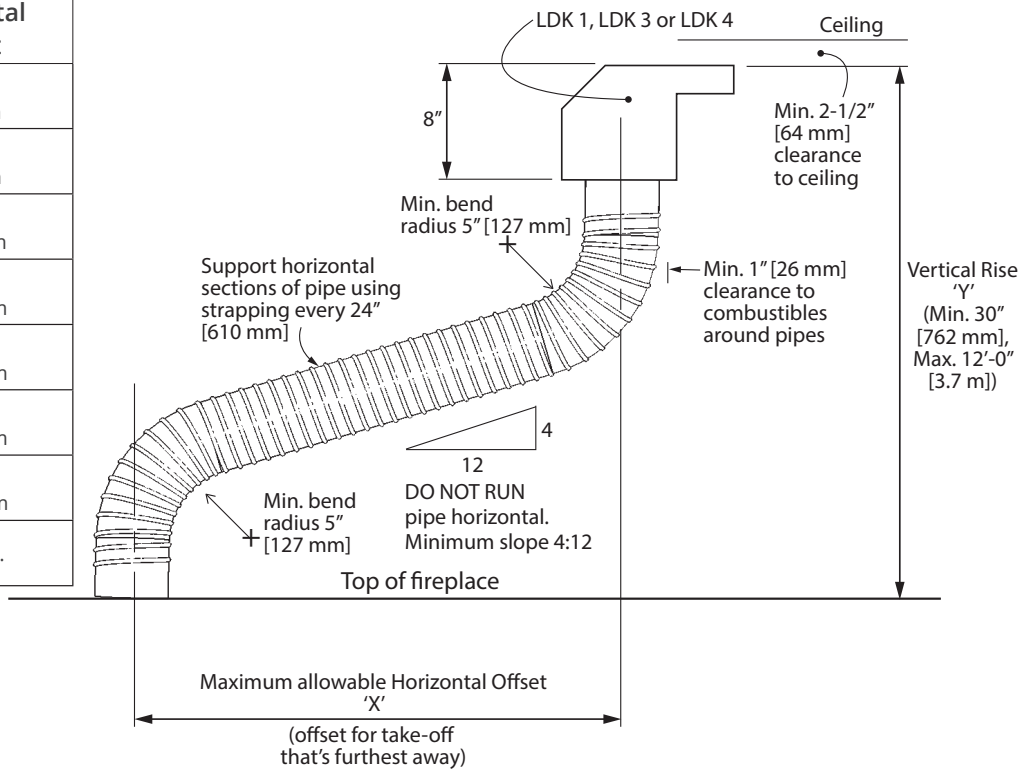

With Plates

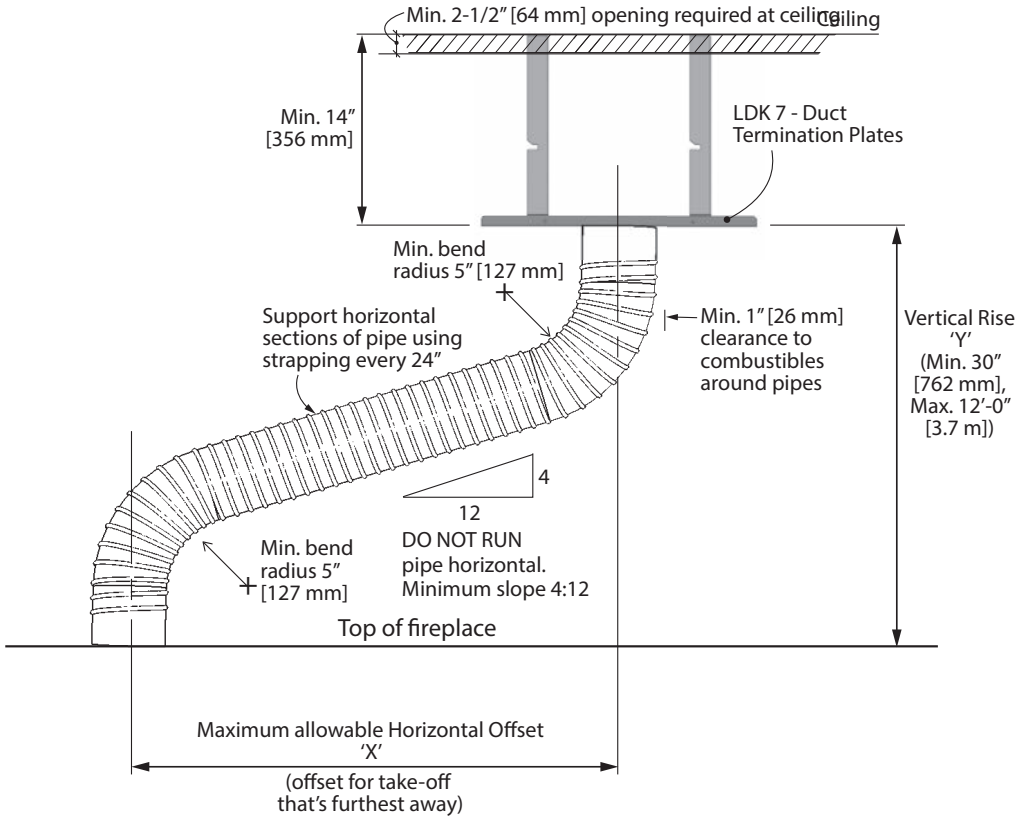

Appendix D—HeatShift System

Plenum Dimensions

LDK 1

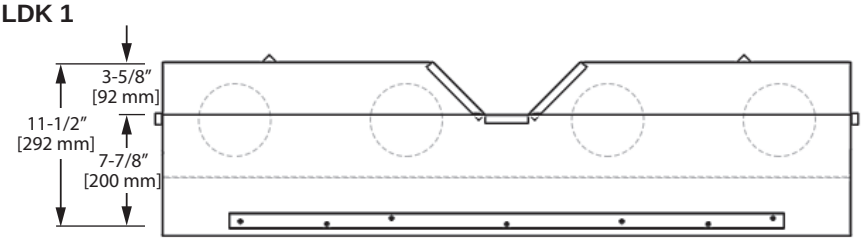

Top View

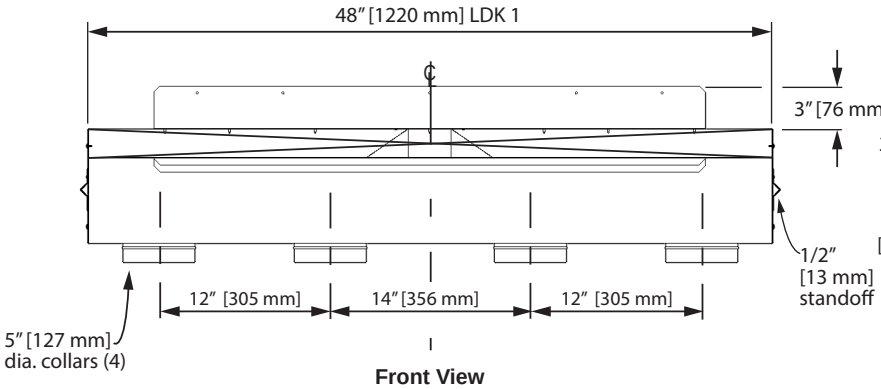

Front View

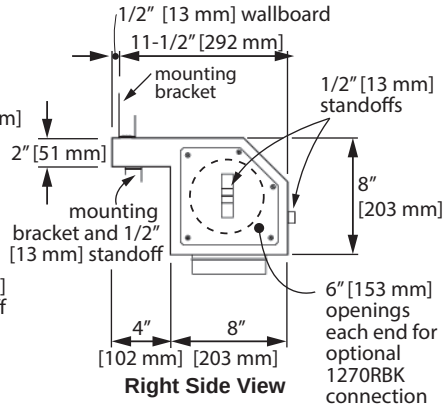

Right Side View

LDK 4

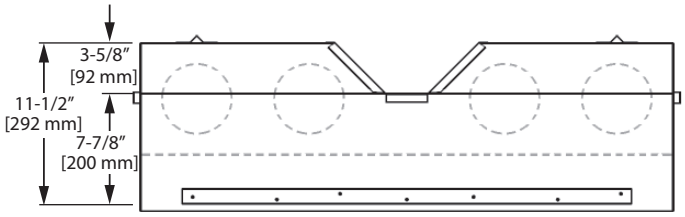

Top View

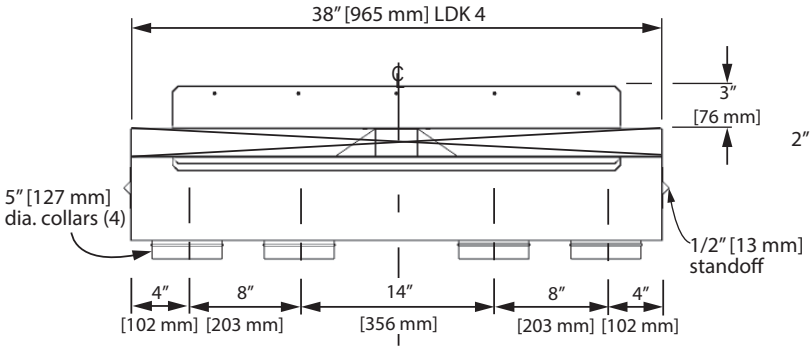

Front View

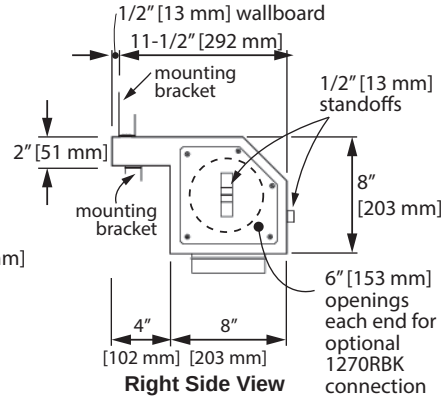

Right Side View

Appendix D—HeatShift System

Plenum Dimensions (cont'd)

LDK 3

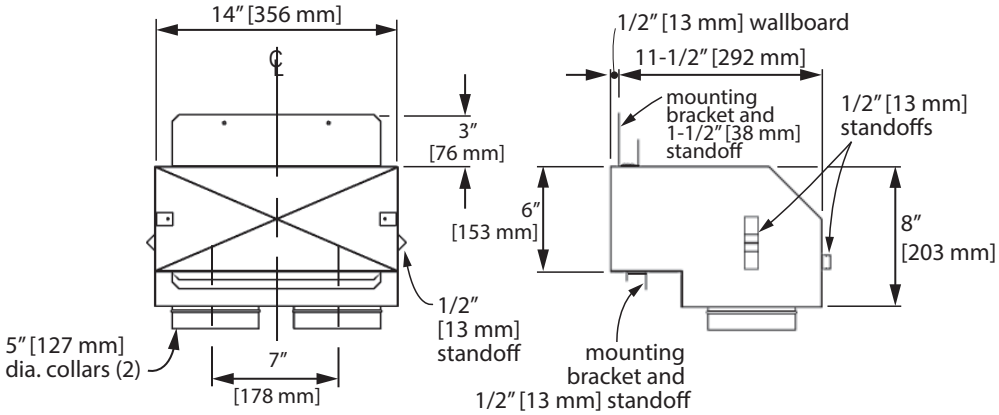

Front View **Right Side View**

LDK 9

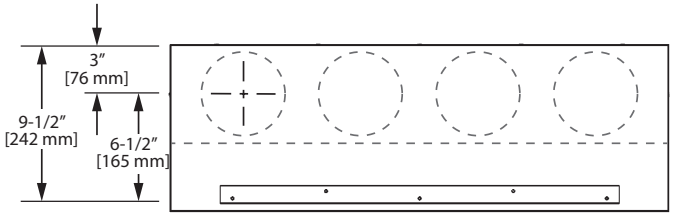

Top View

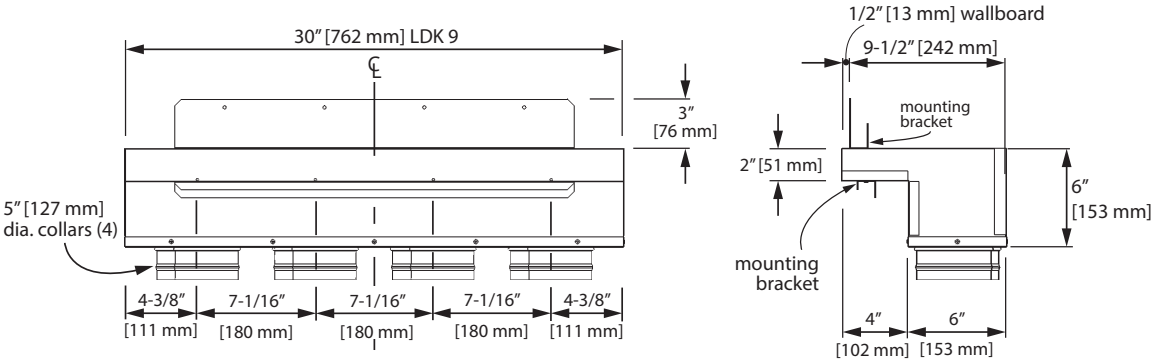

Front View **Right Side View**

Appendix D—HeatShift System

LDK7 Plates Dimensions

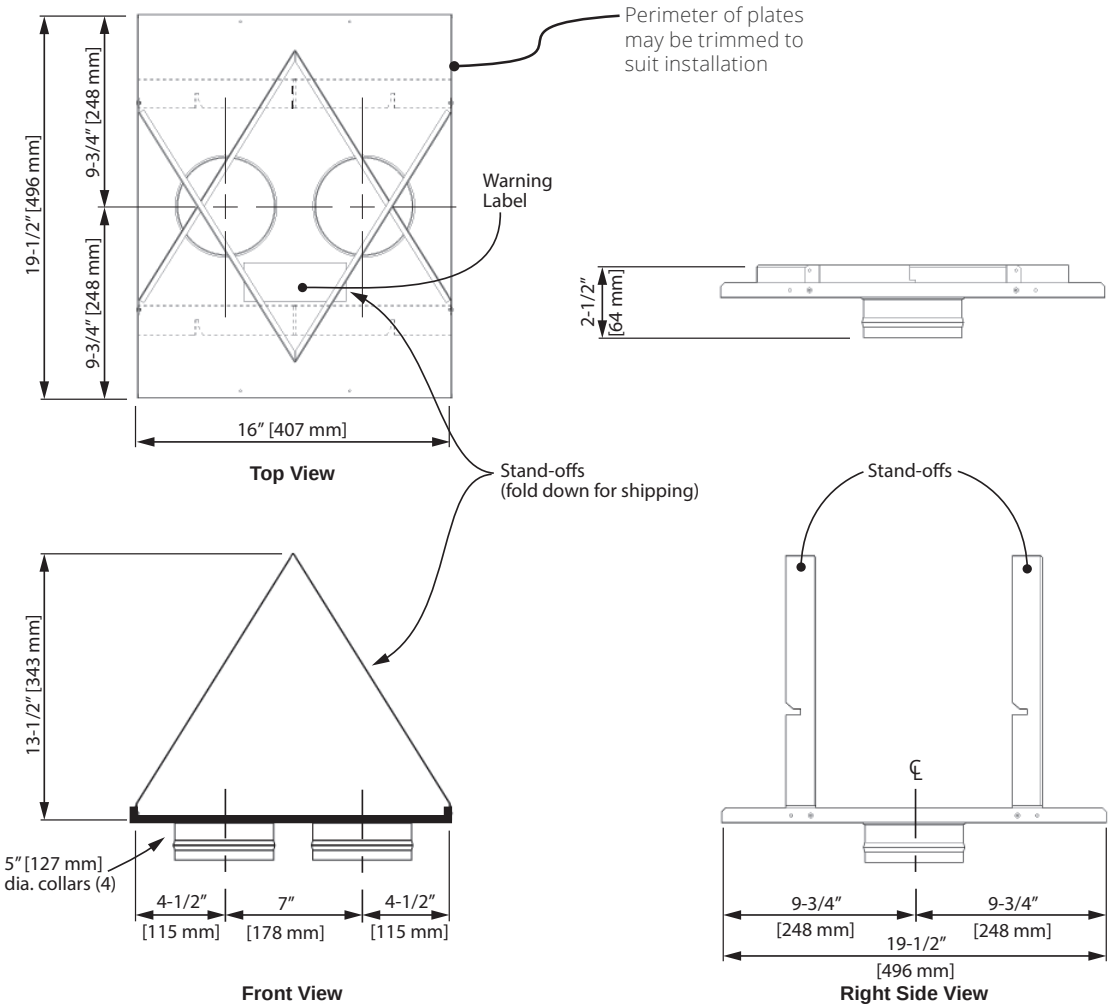

Appendix D—HeatShift System

Rough Frame Openings

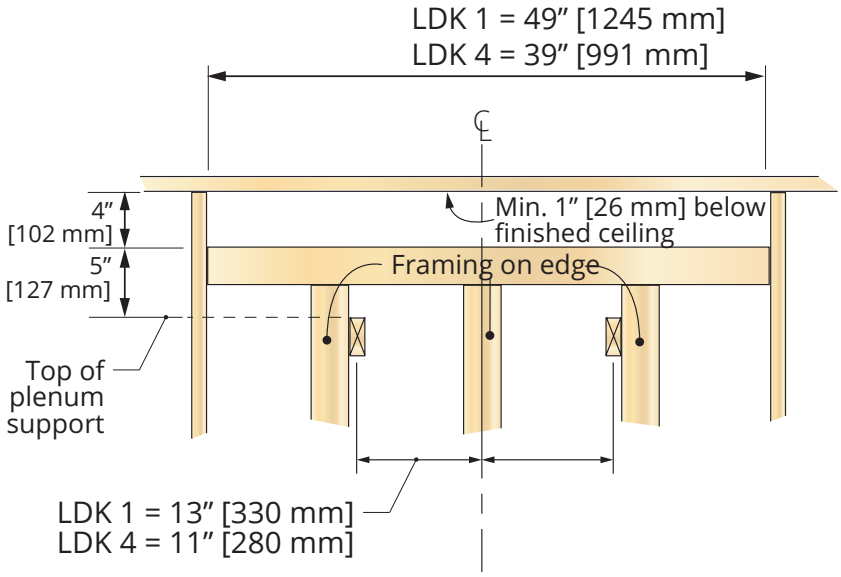

LDK 1 & LDK 4

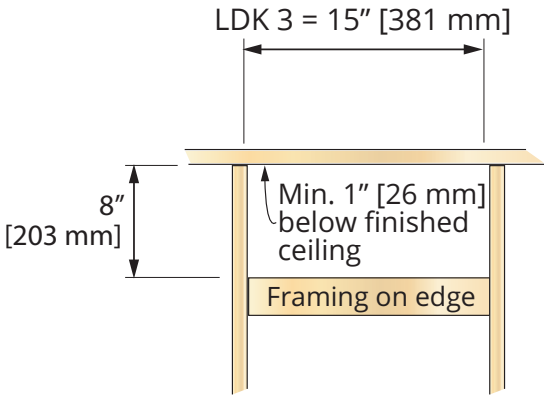

LDK 3

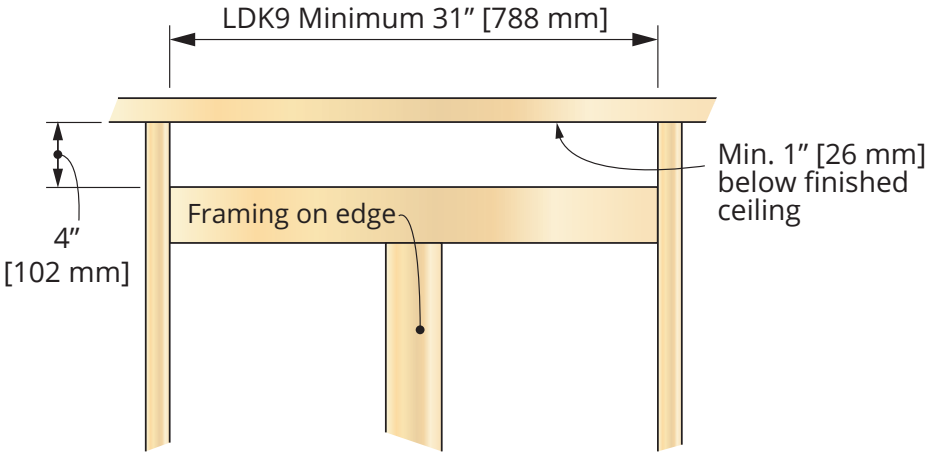

LDK 9

Appendix D—HeatShift System

Framing and Clearances—Plenums, front view

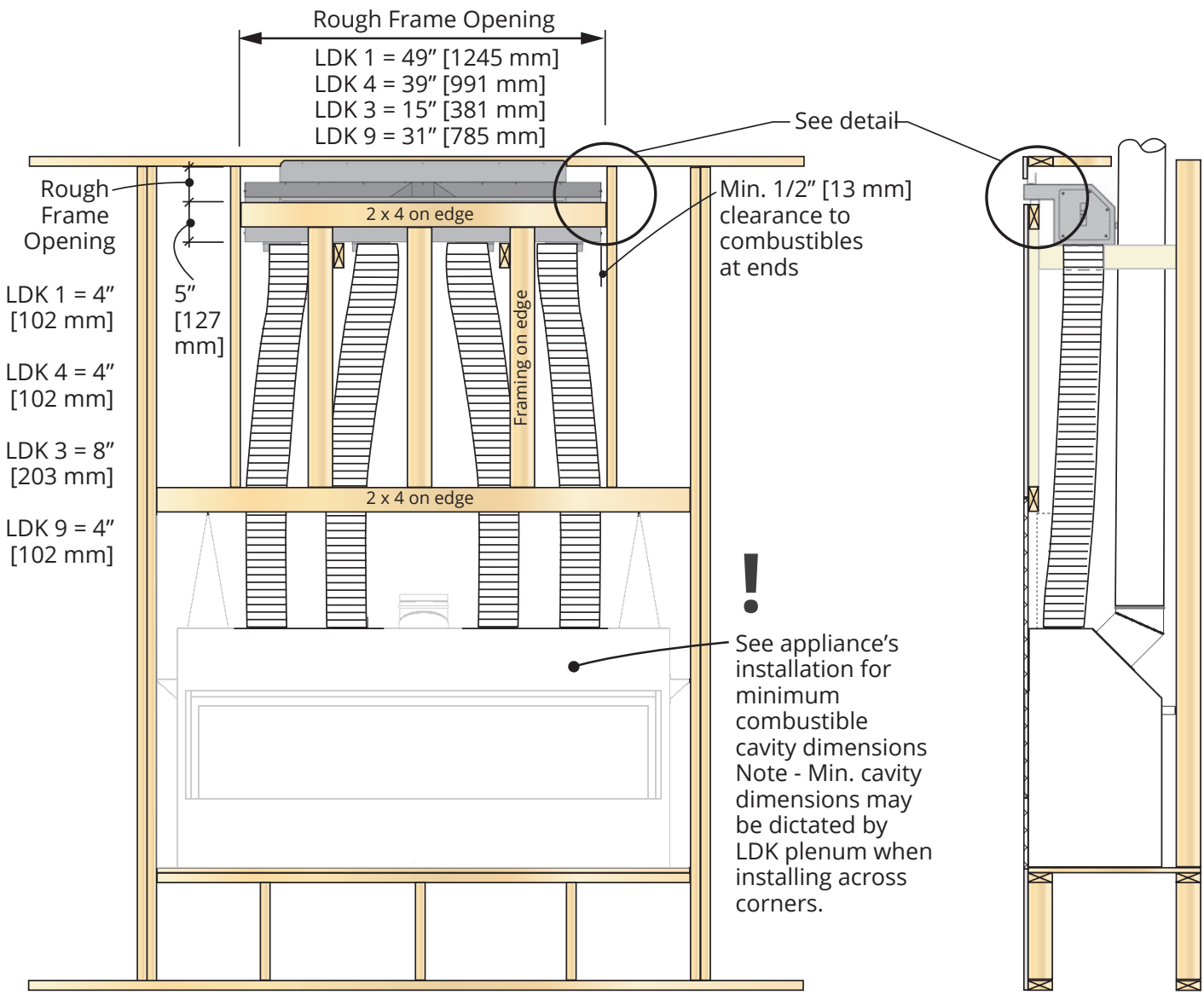

NOTE—Sprinklers

Depending on room temperature, HeatShift air discharge temperatures can be in the range of 210 °F (99 °C). Please refer to local building code, choose appropriate sprinkler heads and place them accordingly.

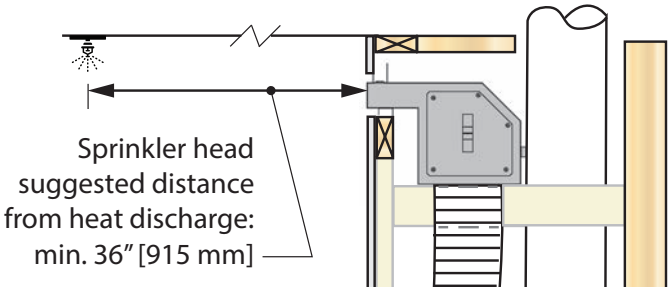

Appendix D—HeatShift System

Framing and Clearances—Plenums, side view

LDK 1 & 4

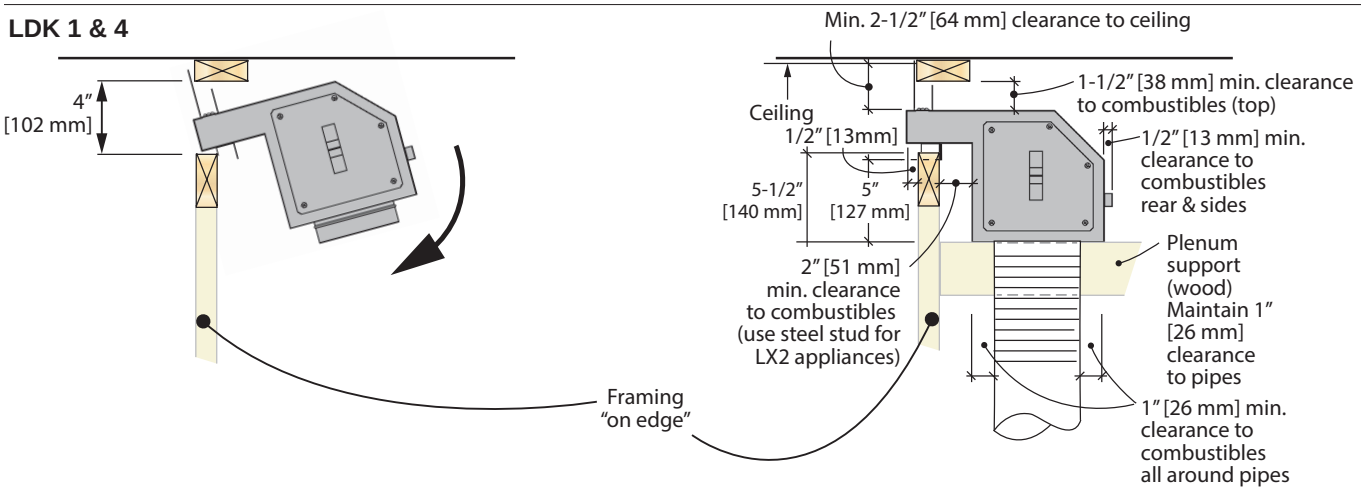

LDK 3

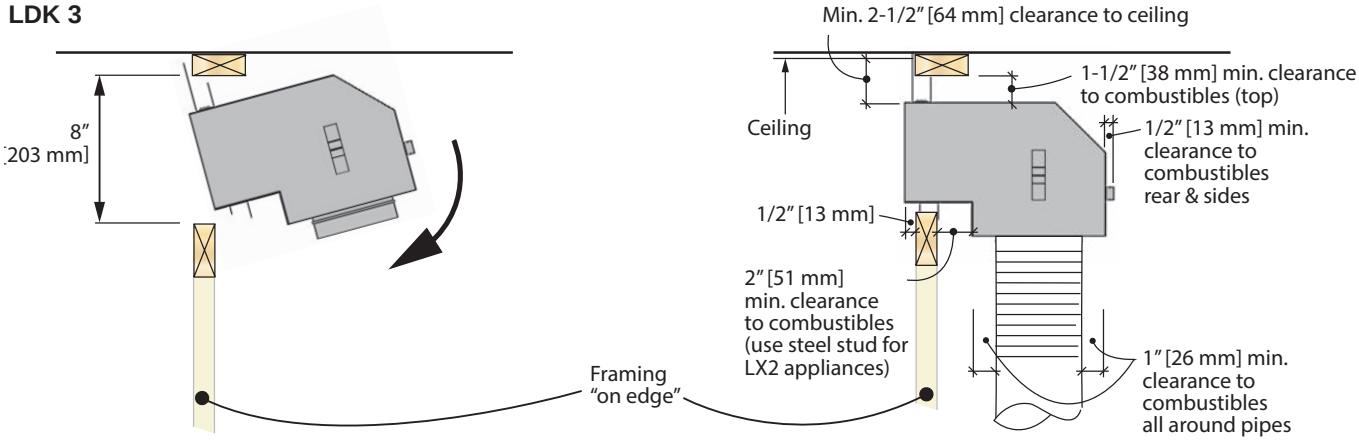

LDK 9

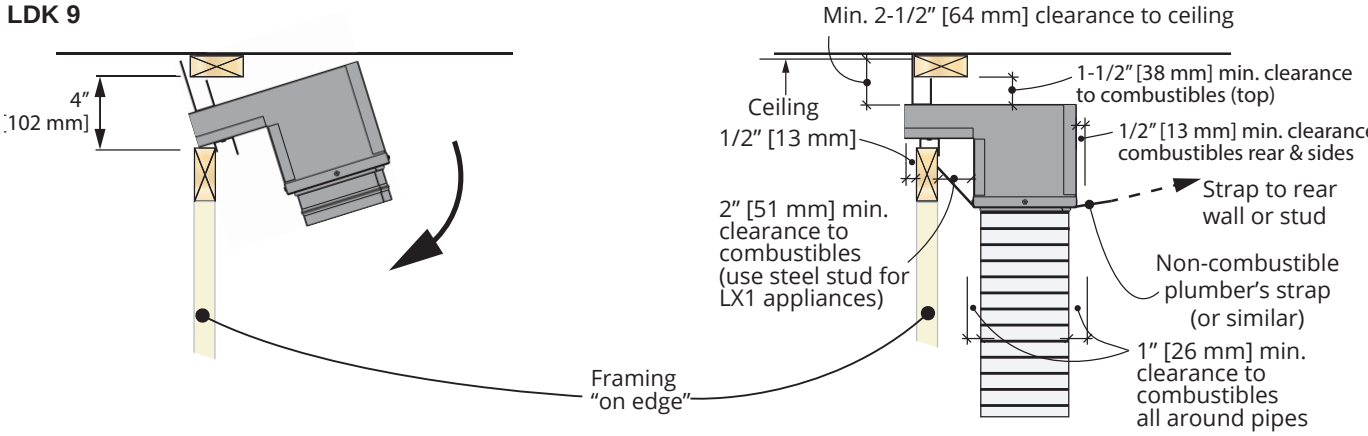

NOTE—Sprinklers

Depending on room temperature, HeatShift air discharge temperatures can be in the range of 210 °F (99 °C). Please refer to local building code, choose appropriate sprinkler heads and place them accordingly.

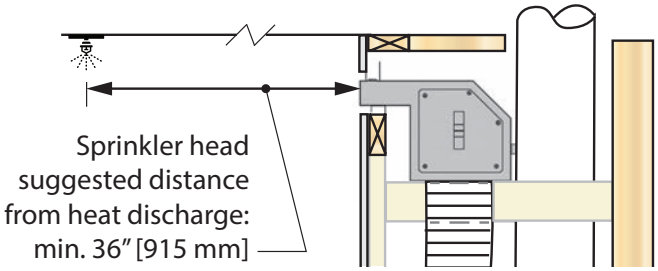

Appendix D—HeatShift System

Wall Valance Discharge Opening using LDK7—Duct Termination Plates

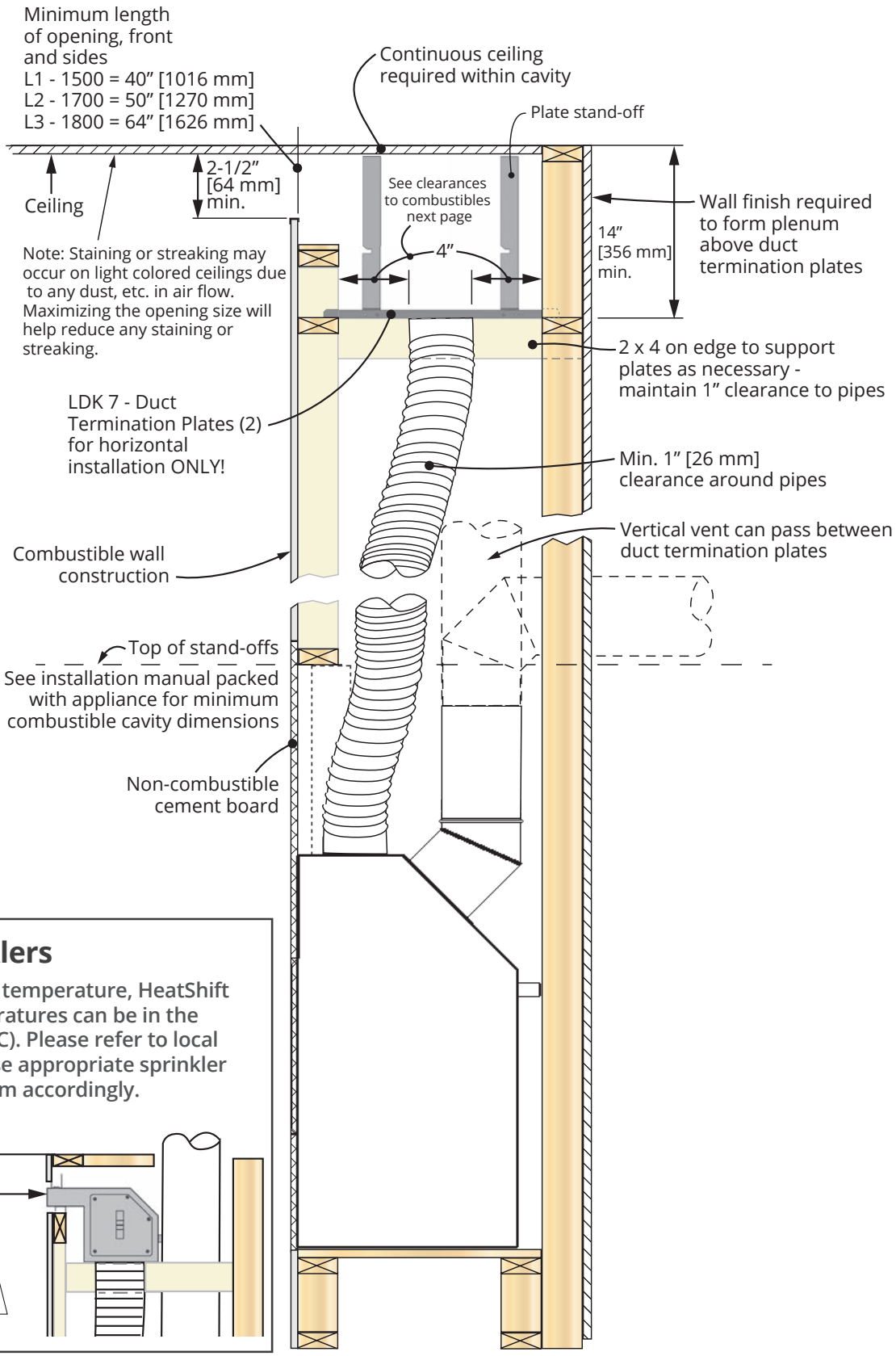

NOTE—Sprinklers

Depending on room temperature, HeatShift air discharge temperatures can be in the range of 210 °F (99 °C). Please refer to local building code, choose appropriate sprinkler heads and place them accordingly.

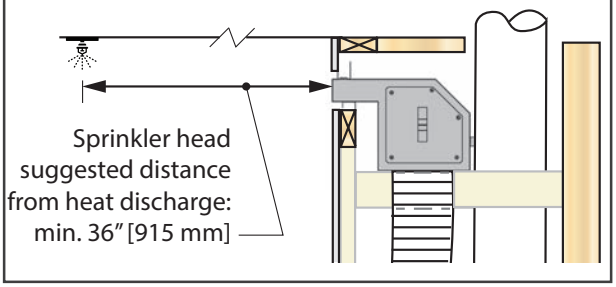

Appendix D—HeatShift System

LDK7 Clearances to Combustibles

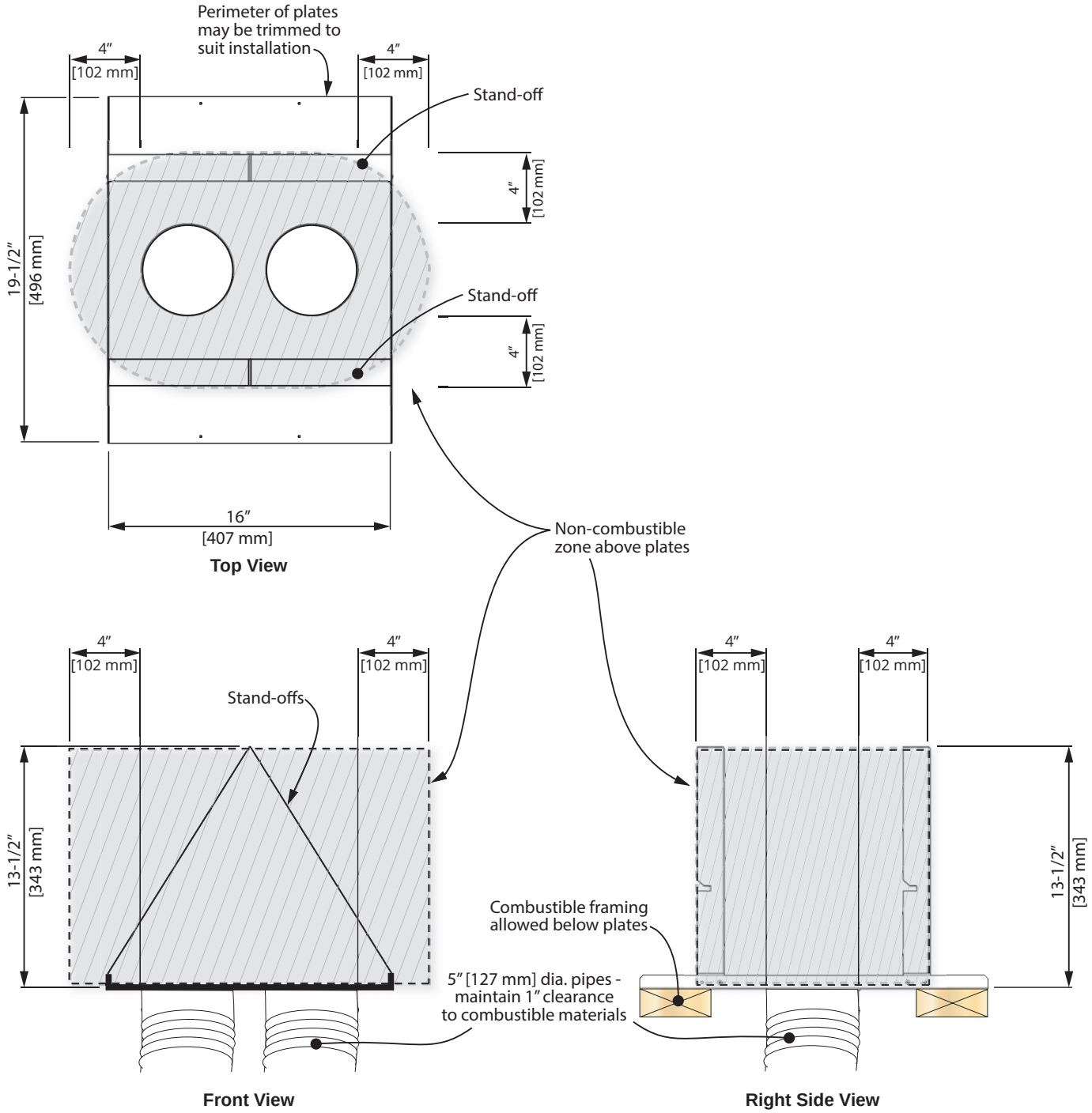

Appendix D—HeatShift System

LDK Duct Kit LDK 1, LDK 4 with optional 1270RBK HeatSplit Remote Blower Kit

(not approved with outdoor installations)

HeatShift™ + HEATSPLIT

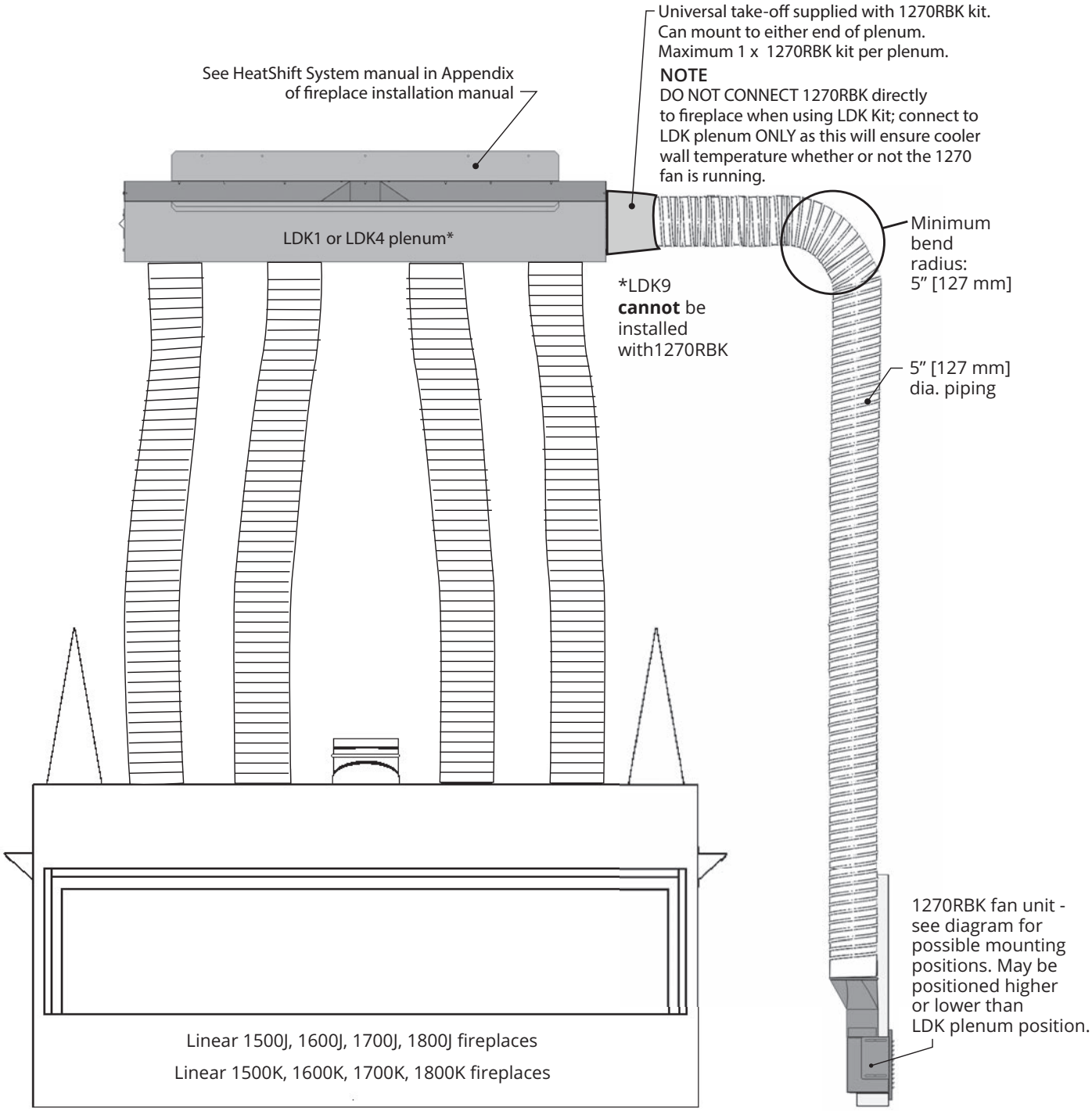

Appendix D—HeatShift System

COMBUSTIBLE Mantel Clearances Linear appliances (when using HeatShift System ONLY)

Sidewall clearances remain as stated in this installation manual.

⚠ WARNING

RISK OF OVERHEATING AND FIRE! Ensure HeatShift installation is complete AND internal convection baffle is removed (see HeatShift installation) when using these combustible mantel clearances.

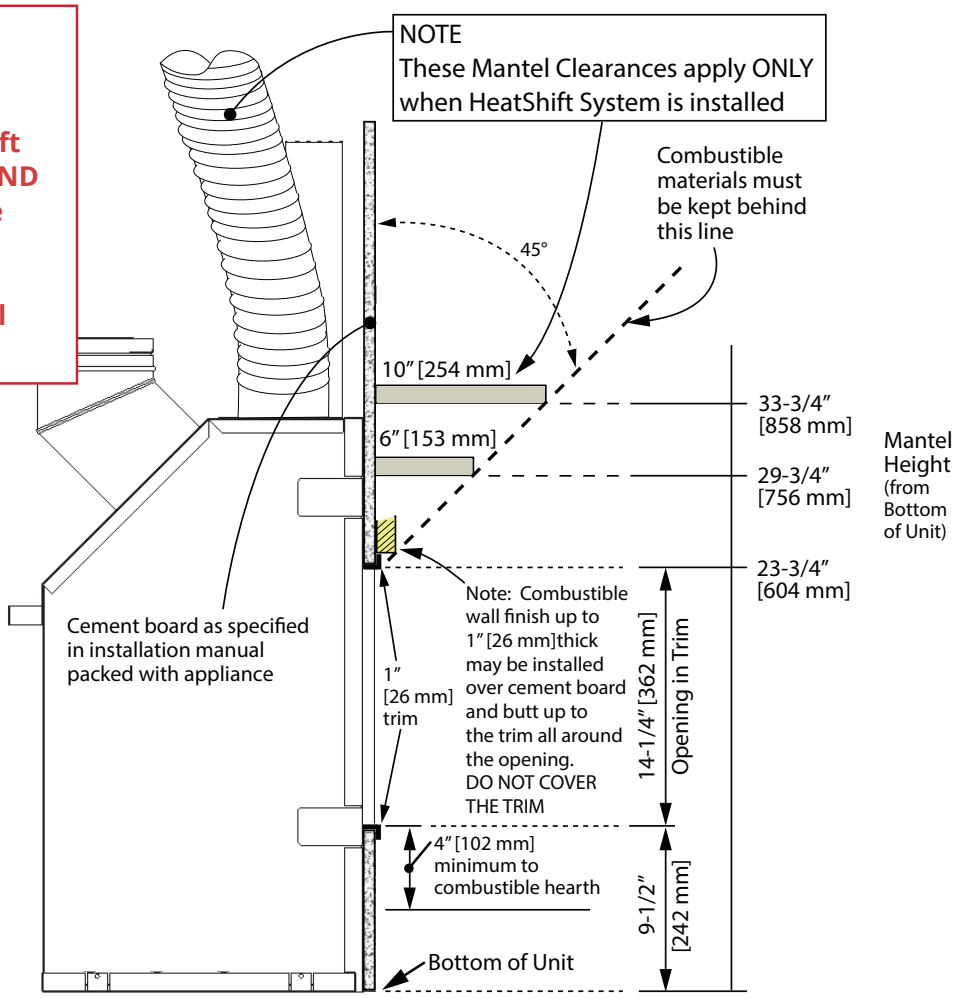

NON-COMBUSTIBLE Flush Hearth/Mantel Projections (when using HeatShift System ONLY)

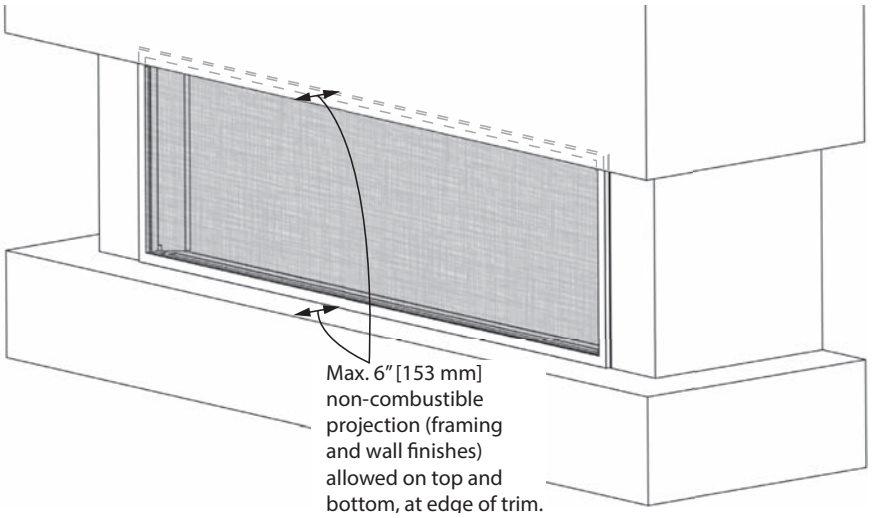

Appendix D—HeatShift System

Remove Convection Baffle

To be effective the LDK Duct Kit requires that a convection baffle located above the firebox inside the appliance case be removed to allow the hot airflow to convect upwards into ducts installed on the fireplace.

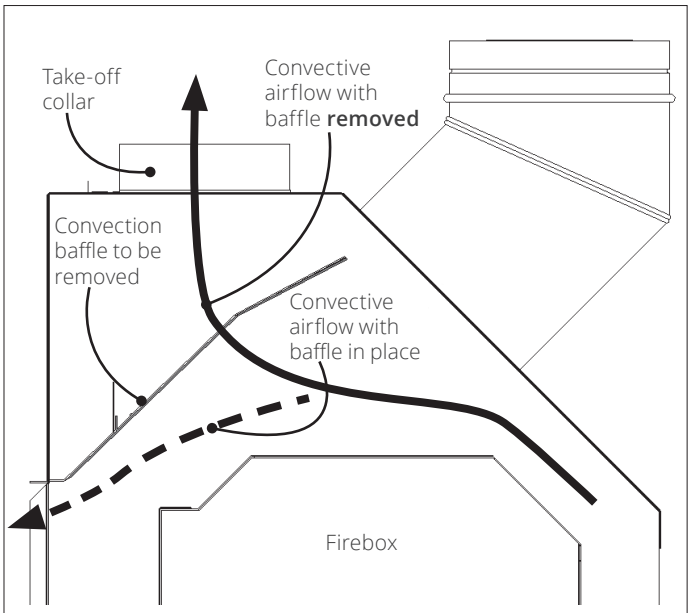

Re-direction of convected air after removing baffle

! Remove the convection baffle from the appliance. It is held in place by screws located right behind the upper edge of the fireplace opening (3 screws/baffle). Recycle this panel as it is no longer needed.

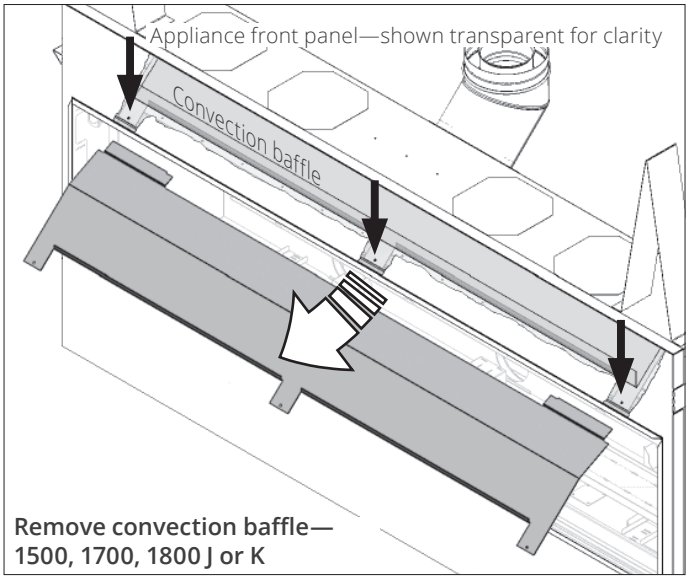

Remove convection baffle—1500, 1700, 1800 J or K

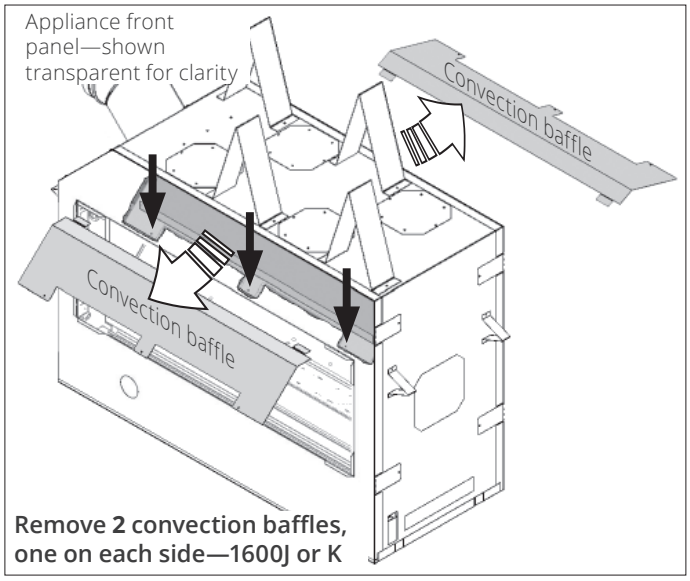

Remove 2 convection baffles, one on each side—1600J or K

Appendix D—HeatShift System

Install HeatShift collars

1. Remove the four cover plates on top of the appliance case (6 screws each).

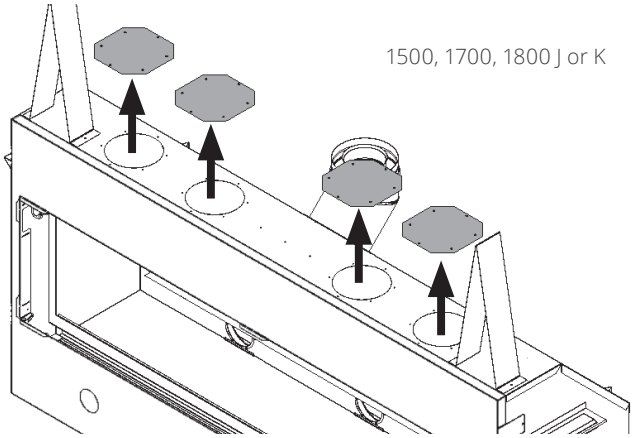

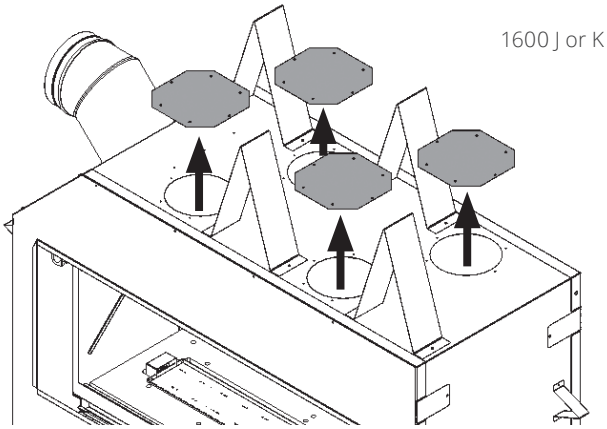

2. Install the collars on the holes on top of the appliance's case (6 screws each).

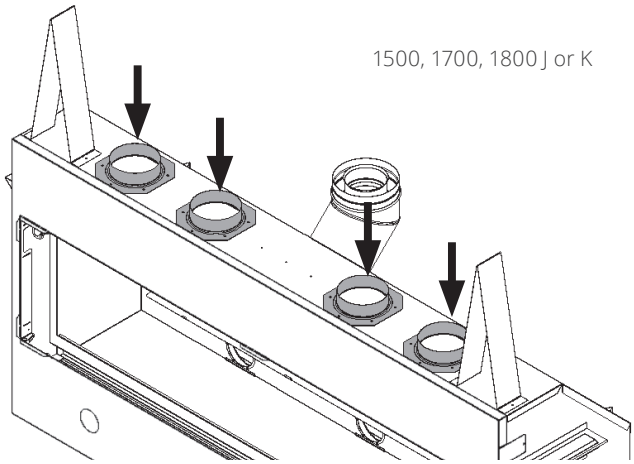

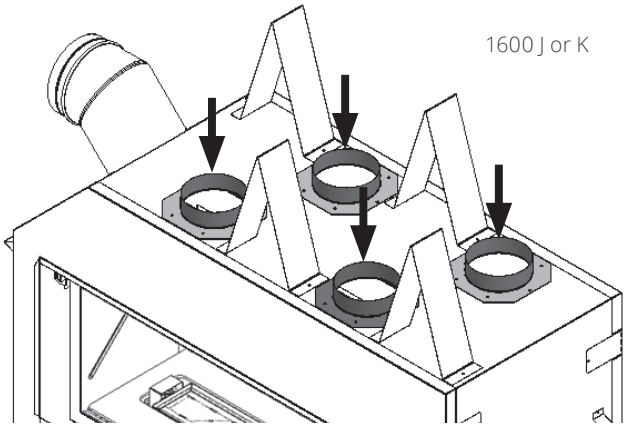

⚠ WARNING

All FOUR (4) takeoffs MUST BE CONNECTED TO PLENUM(S).

⚠ WARNING

DO NOT INSTALL 1270RBK Remote Blower Kit to any of these 4 takeoffs.

Appendix D—HeatShift System

Install Plenum Kits (LDK1, LDK3, LDK4 & LDK9) —see next page for LDK7 Duct Termination Plates

1. Frame a rough opening at the desired location—see earlier sections of this manual for allowable plenum positions and rough frame opening sizes.
2. Install top mounting bracket(s) to the plenum using screws provided (use the short sheet metal screws provided otherwise the screw tails (ends) will interfere with the finishing frame when installed).

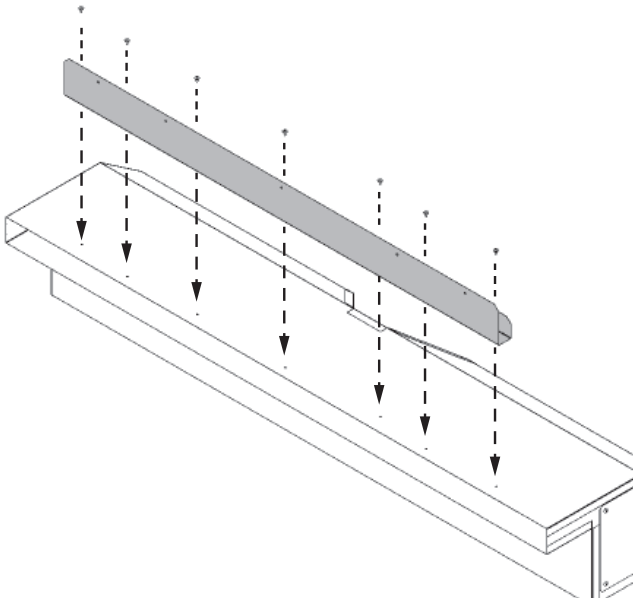

3. Install the plenum(s) into the rough frame opening maintaining minimum clearances to combustibles as listed—see Rough Frame Openings. Fix the plenum to the framing using nails or screws through the top mounting bracket. **Note that the mounting brackets are not intended to carry the weight of the plenum and pipes. Provide support to the underside of the plenum and ensure the plenum is level and its outlet is not distorted—see Framing and Clearances.** Use metal strapping (all-round, not supplied) as required to further secure the plenum to framing.
4. Attach one section of UL-181, Class 1 approved air duct to each of the collars and secure it with gear clamps provided. **DO NOT SPLICE DUCTS!**
5. Attach the top of the pipe sections to the plenum securing them with the gear clamps provided. An upward slope must be maintained in horizontal sections of pipes for proper convection. Use straps as necessary to maintain the pipes positions. Support horizontal sections every 24 inches [610 mm].
6. Paint the inside surfaces of the plenum using high-temperature flat black spray paint for installations where the inside of the plenums may be visible. **Note:** The flanges of the white finishing frame (when used) will insert approximately 1-1/4" [32 mm] into the plenum covering the shiny sheet metal.

Install the finishing frame or louver to the plenum after the wall finish is completed:
LDK1, LDK4, LDK9: Use the LDK2, LDK5 or LDK10 depending of the length of the plenum.

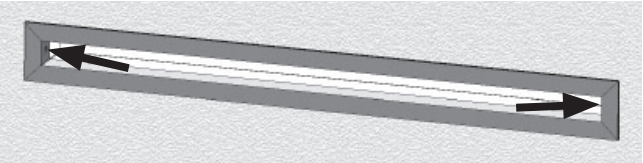

LDK3: Use the grilles provided with the kit.

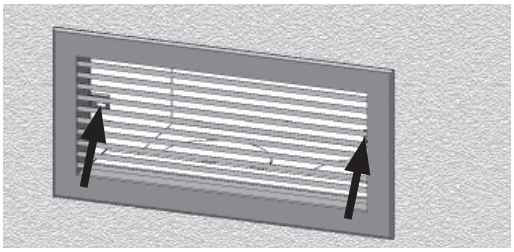

Note: The frame/louver are finished white but may be painted another color if desired; use high temperature paint (250°F/ 121°C). You may also finish up to the perimeter of the plenum opening with your material of choice and not use the frame or louver. Do not finish over any of the opening in the plenum outlet.

7. Continue with the fireplace installation.

Appendix D—HeatShift System

Install Duct Termination Plates (LKD7) —see previous page for LDK1, LDK3, LDK4 & LDK9 Plenum kits

1. Frame a rough opening and platform at the desired location—see earlier sections of this manual for allowable duct termination plates positions and rough frame opening sizes.
2. On each duct termination plate, rotate both standoffs to the vertical position and secure in place using screws provided.

2 stand-offs per plate

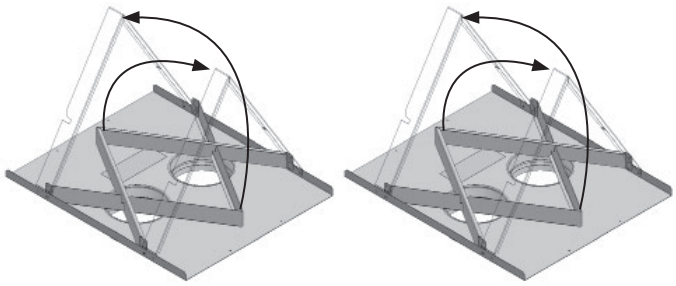

3. Install the termination plates into the framing ensuring collars/pipes on underside of plates maintain 1 inch [26 mm] clearance to combustibles and clearance to combustible above the plates are maintained as listed in Wall Valence Discharge Opening. The termination plates perimeter may be trimmed as necessary to accommodate framing. Secure the termination plate to framing using screws or nails to avoid movement.
4. Attach one section of UL-181, Class 1 approved air duct to each of the collars and secure it with gear clamps provided. **DO NOT SPLICE DUCTS!**
5. Attach the top of the pipe sections to the duct termination plates securing them with the gear clamps provided. An upward slope must be maintained in horizontal sections of pipes for proper convection. Use straps as necessary to maintain the pipes positions. Support horizontal sections every 24 inches [610 mm].
6. Continue with the fireplace installation.

Repair Parts List

	Description	Part no.
LDK1	48" Quad Hot Air Plenum Kit [1220 mm]	
	48" x 2" quad plenum [1220 x 51 mm]	4005476
	5" take-off collars (4) [127 mm]	4005478
	Top mounting bracket/standoffs	4007211
	#8 slotted drive screws 1/4" (7) [6 mm]	798601
LDK2	48" Outlet Frame Kit for LDK1 [1220 mm]	
	Aux Frame-SPL 48" x 2" white [1220 x 51 mm]	4005612
LDK3	14" Double Hot Air Plenums Kit [356 mm]	
	14" x 6" double plenums (2) [356 x 153 mm]	4005464
	5" take-off collars (4) [127 mm]	4005478
	DABL-00-C-SPL 14" x 6" Grilles white (2) [356 x 153 mm]	4005614
	Top mounting bracket/standoffs (2)	4005566
	#8 slotted drive screws 1/4" (6) [6 mm]	798601
LDK4	38" Quad Hot Air Plenum Kit [965 mm]	
	38" x 2" quad plenum [965 x 51 mm]	4005477
	5" take-off collars (4) [127 mm]	4005478
	Top mounting bracket/standoffs	4007213
	#8 slotted drive screws 1/4" (7) [6 mm]	798601
LDK5	38" Outlet Frame Kit for LDK4 [965 mm]	
	Aux Frame-SPL 38" x 2" white [965 x 51 mm]	4005613
LDK6	5" Aluminum 2-ply Flex Kit [127 mm]	
	5" dia 10' (uncompressed) aluminum chimney liners (2) [127 mm x 3 m]	4005635
	4.5" - 6.5" ss gear clamps (8) [114 - 165 mm]	4005642
LDK7	Duct Termination Plates	
	Plate and collar assembly (2)	4006747
	5" take-off collars (4) [127 mm]	4005478
	Screws 8 x 3/8 tap PN HD PH (12)	100A757
LDK9	30" Quad Hot Air Plenum Kit [762 mm]	
	30" x 2" quad plenum [762 x 51 mm]	4007903
	5" take-off collars (4) [127 mm]	4005478
	Top mounting bracket/standoff	4007601
	#8 slotted drive screws 1/4" (5) [6 mm]	798601
LDK10	30" Outlet Frame Kit for LDK9 [762 mm]	
	Aux Frame-SPL 30" x 2" white [762 x 51 mm]	4007951

Each LDK kit is sold separately.

Appendix E—Spare Parts

	Description	Part No
1	Heat shield	4003049
2	45 degrees flanged elbow	0945M
3	Elbow gasket	4002999
4	Restrictor plate	4003017
5	Top stand-offs (4)	4002985
6	Side stand-offs (4)	4003527
7	Take-off cover	4003046
8	Cover plates (4)	4005409
9	Convection baffles (2)	4005402
10	RH Window latch assembly (2)	4002766
11	LH Window latch assembly (2)	4002770
12	Window assembly (2)	4002754S
13	Hot glass warning plate (2)	4003093
14	Strain relief	4006548
15	Electrical box access plate - outer	4007973
16	Electrical box cover - inner	4007971
17	Power receptacle	4006368
18	Top liner panel	4003522
19	Top panel support (2)	4003523
20	Black steel platform	4004885AH
21	Platform supports (2)	4002908
22	Burner end location bracket	4002903
23	Burner	4007084AH
24	Burner module assembly (natural gas)	4007083S
	Burner module assembly (propane gas)	4007735S
25	Pilot shield	4003018AH
26	Pilot complete assembly (natural gas)	4006738S
	Pilot complete assembly (propane gas)	4006739S
27	Pilot plug	4000726
29	Thermocouple	4000061
30	Pilot injector #51 (natural gas)	4000735
	Pilot injector #30 (propane gas)	4000736
31	Pilot tube	4000732
32	Pilot hood 2-flame	4000730
33	Extended nut	4001855
34	Electrode	4001856
35	Pilot gaskets (2)	4000715
36	Pilot mount	4006907
38	Burner mount	4007223
39	Air shutter stopper	4008004
40	Orifice/aeration block	4007702
40	Gas orifice #36 (natural gas)	4007000-36
	Gas orifice #51 (propane gas)	4007000-51
42	Brass socket head pipe plug	4008003

	Description	Part No
43	Block/pipe connector	4006689
44	Air shutter	4007748
45	Aeration lever	4007225
46	Burner module plate	4006916
47	Gaskets module plate, long (2)	3000400
48	Gaskets module plate, short (2)	3000399
49	Valve to elbow pipe assembly	4006923
50	Pipe s/s flex	4000345
51	Thermocouple interrupter	4001037
52	GV60 valve, no connector	4000873
52a	By-pass screw #220 (natural gas)	4002572
	By-pass screw #160 (propane gas)	4000810
52b	Straight connector	220K891
52c	Inlet elbow 1/2" tube x 3/8"	4002909
53	Valve mount	4002905
54	Yellow cable to interrupter	4002096
55	Red cable to interrupter	4001035
56	Ignition cable sleeve	4002244
57	Ignition cable 500 mm	4001039
58	Wire harness GV60	4001187
59	Receiver (Valor 10 two way)	4005597
60	Handset wall holder	4004459
61	Valor 10 Handset	4007548
62	Remote battery & Wall switch kit	RBWSK
62a	Junction box	4005527
62b	Cover plate & 4 screws	4005526
62c	Battery holder	4006553
62d	Cable tie	4005524
62e	Harness assembly	4005523
62f	Plate with magnets	4005391
62g	Long screws (2)	4001444
62h	Wall switch with 2 screws	4005522
62i	Battery cover assembly	4005390
63	Black fluted liner set	1615FBL
64	Side fluted panels (2)	4003521
65	Reflective glass panel kit	1625RGL
66	Side glass panels (2)	4004688
67	Anchor brackets	4006594AH
68	Decorative Glass Murano	1500DGM
69	Glass panel	4002869
70	Classic 1/2" clear fireglass	4004521
71	Rocks & Shale Set	1514RSS
72	LH twig	4001827
73	LH twig - short (2)	4001827S

Appendix E—Spare Parts

	Description	Part No
74	RH twig (2)	4001828
75	Grey Rock S4-A (6)	4002338
76	Dark Grey Rock S4-A (4)	4002339
77	Grey Rock S4-B (4)	4002340
78	Dark Grey Rock S4-B (6)	4002341
79	No 7 Grey 5 Matte pitted rock	4002650
80	No 9 Grey 5 Matte rock (2)	4002652
81	No 11 Grey 3 Matte rock (2)	4002654
82	No 14 Grey 9 Gloss rock	4002657
83	No 16 Warm Grey 3 Gloss pitted rock (2)	4002659
84	No 17 Grey 5 Gloss pitted rock	4002660
85	Shale 3/4" - grey, black 0.5lb ea	4004792
86	Driftwood Kit	1505DWKV2
	Log L16	4007986
	Log L18	4007988
	Log L33	4008737
	Log L34	4008738
	Log L35	4008739
	Log L36	4008740
87	Brown pebble	4003082
88	Grey pebble	4003083
89	White pebble	4003084
90	Black pebble	4003085
91	Small grey pebble	4003086
92	Beige pebble	4003087
93	Vermiculite, bag, 5-1/2 cups	4002940
94	Split Wood Kit	1505SWKV2
95	Embers, grey, 6-cup bag	4007782
	Log 20	4008743
	Log 21	4008744
	Log 22	4008745
	Log 23	4008746
	Log 24	4008747
	Log 25	4008748

	Description	Part No
	Log 26	4008749
	Log 27	4008750
	Log 28	4008751
96	Birch Log Kit	1505BLKV2
97	Embers, 6-cups bag	4007782
	Log L1	4007371
	Log L2	4007372
	Log L4	4007374
	Log L6	4007376
	Log L12	4007382
	Log L30	4008758
	Log L31	4008759
	Log L32	4008760
98	GV60 Valve Repair Kit	4004544

Appendix E—Spare Parts

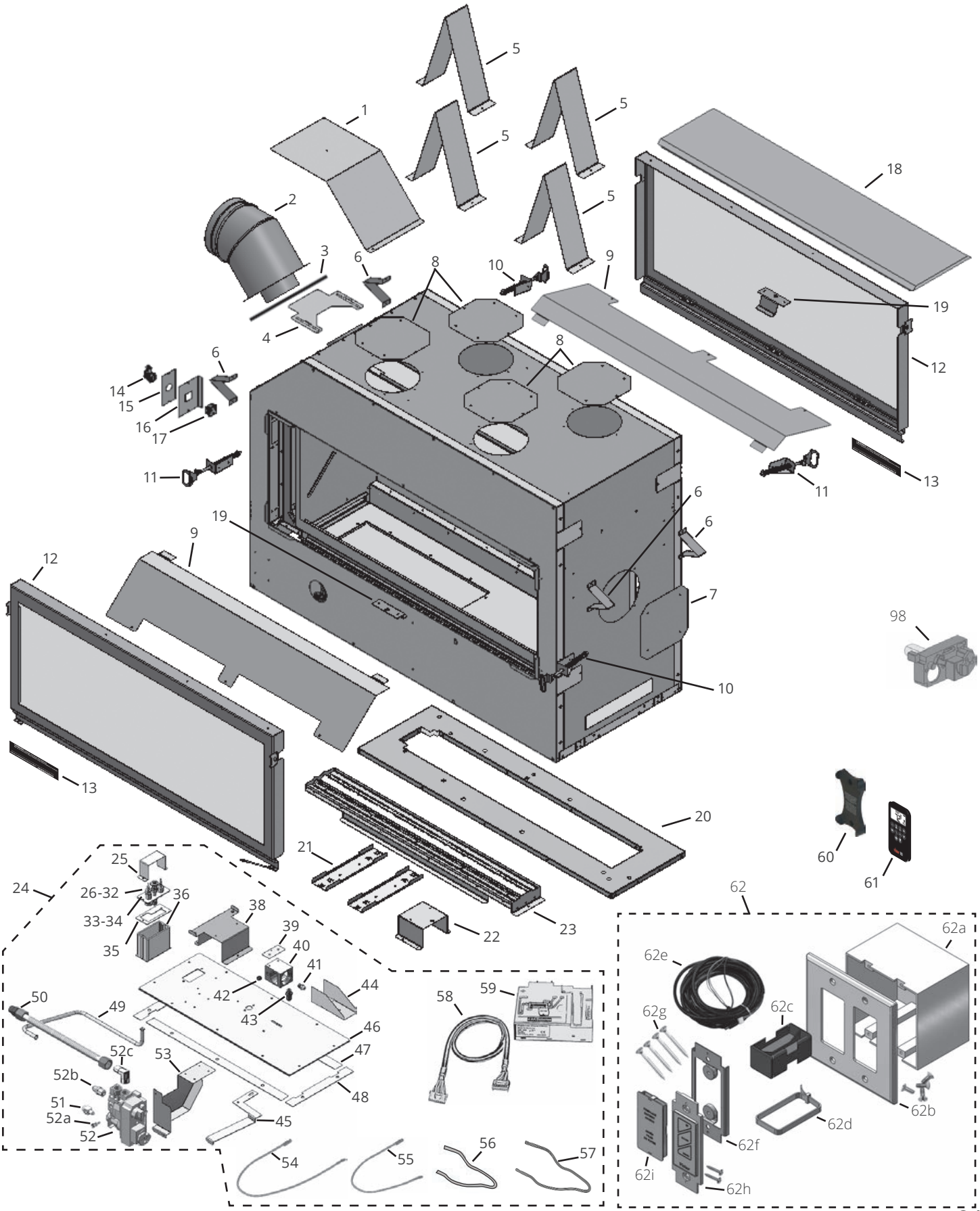
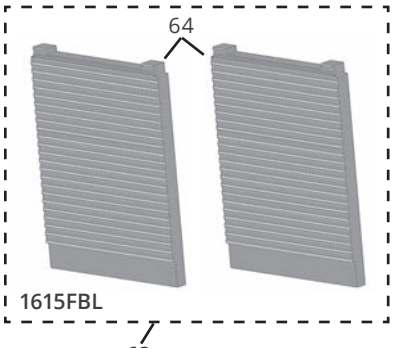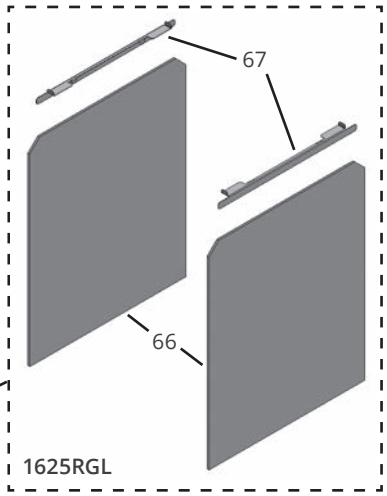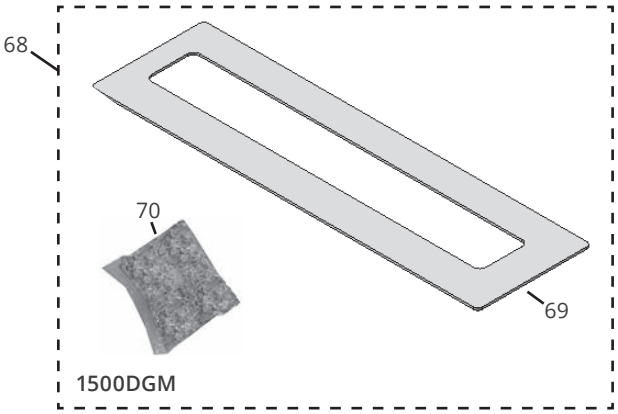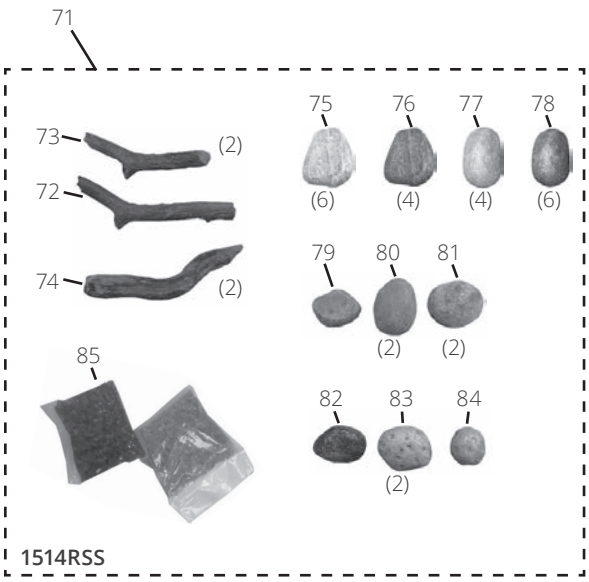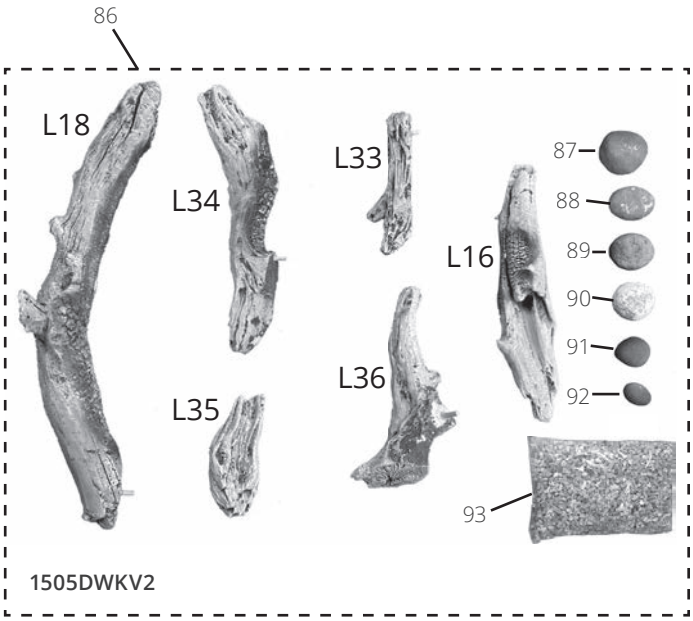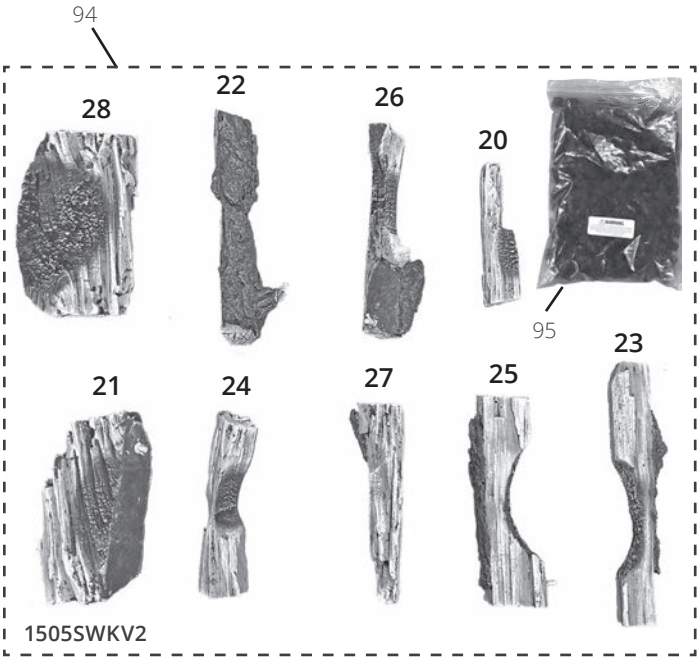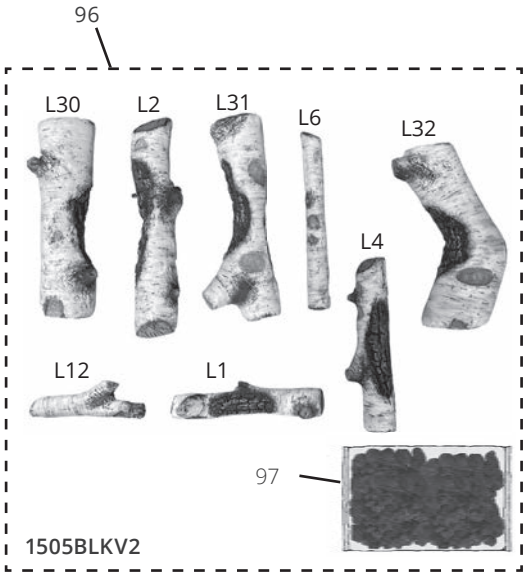
Appendix E—Spare Parts