Installation Manual

LX1

Direct Vent Zero Clearance
Gas Fireplace
natural gas 2100PKN
propane gas 2100PKP

PIER

with HeatShift™

Installer: Place model/serial number here.

Installer: Leave this manual with the appliance.
Consumer: Retain this manual for future reference.

⚠ WARNING:
FIRE OR EXPLOSION HAZARD
Failure to follow safety warnings exactly could result in serious injury, death, or property damage.

Do not store or use gasoline or other flammable vapors and liquids in the vicinity of this or any other appliance.

WHAT TO DO IF YOU SMELL GAS

- **Do not try to light any appliance.**
- **Do not touch any electrical switch; do not use any phone in your building.**
- **Leave the building immediately.**
- **Immediately call your gas supplier from a neighbor's phone. Follow the gas supplier's instructions.**
- **If you cannot reach your gas supplier, call the fire department.**

Installation and service must be performed by a qualified installer, service agency or the gas supplier.

⚠ DANGER

Hot glass will cause burns.

Do not touch glass until cooled.

Never allow children to touch glass.

A barrier designed to reduce the risk of burns from the hot viewing glass is provided with this appliance and must be installed for the protection of children and other at-risk individuals.

4007364-16

This appliance may be installed in an after-market permanently located, manufactured (mobile) home where not prohibited by local codes. This appliance is only for use with the type of gas indicated on the rating plate. This appliance is not convertible for use with other gases, unless a certified kit is used.

INSTALLER: Leave this manual with the appliance.

CONSUMER: Retain this manual for future reference.

Massachusetts:

The piping and final gas connection must be performed by a licensed plumber or gas fitter in the State of Massachusetts. Also, see Carbon Monoxide Detector requirements in this manual, page 53.

⚠ WARNING

This product can expose you to chemicals including Benzene, which is known to the State of California to cause cancer and birth defects or other reproductive harm. For more information go to www.P65Warnings.ca.gov.

Note: Natural gas, in its original state, contains Benzene.

This appliance is a domestic room-heating appliance. It must not be used for any other purposes such as drying clothes, etc.

This appliance is suitable for installation in a bedroom or bed sitting room.

Ce guide est disponible en français sur demande.

NATIONAL FIREPLACE INSTITUTE NFI ADVOCATE

We recommend a US Certified National Fireplace Institute (NFI) specialist install our gas hearth products.

DESIGN CERTIFIED

CERTIFIED

The information contained in this manual is believed to be correct at the time of printing. Miles Industries Ltd. reserves the right to change or modify any information or specifications without notice. Miles Industries Ltd. grants no warranty, implied or stated, for the installation or maintenance of your heater, and assumes no responsibility for any consequential damage(s).

© Copyright Miles Industries Ltd., 2026. All rights reserved.
Designed and manufactured for Miles Industries Ltd.

Valor Fireplaces
190–2255 Dollarton Highway
North Vancouver, BC, Canada V7H 3B1
T 604.984.3496 F 604.984.0246
valorfireplaces.com

Welcome to Valor®

This appliance has been professionally installed by:
Dealer Name: _____
Phone:_____

Please read this manual BEFORE installing and operating this appliance.

Fireplace Safety 4
Specifications 6
Kits & Accessories 7
Approved Venting Components 8
Dimensions and Location 10
Installation Planning 11
- Before Installing 11
- Overview - Wood Framing 12
- Overview - Steel Framing 13
- Overview - HeatShift Canopy 14
- Clearances to Combustibles 15
- Wood Framing 16
- Steel Framing Kit 17
- Vent Height Considerations 18
- Wall Finish 19

Venting 21
- Materials Overview 21
- Co-axial 22
  - Typical Co-axial Venting Components 22
  - Venting Chart 23
  - Restrictor Location 24
  - Horizontal Vent Termination Location 25
  - Vertical Vent Termination 26
- Co-linear Venting 26
  - Existing Fireplace Preparation 26

Appliance Preparation 28
- Unpacking the Fireplace 28
- Installing Handles 29
- Installing Standoffs 30

Installation 31
- Electrical Wiring 31
- Gas Supply 33
- Wall Switch Kit 35
- Liners 37
  - Ceramic Liner 37
  - Glass Liner 38
- Fuel Beds 39
  - Birch Log Kit 2100BLK 39
  - Driftwood Kit 2100DWK 41
  - Rock and Shale Set 2100RSS 43
  - Glass Murano Set 2100DGM 45
- Remote Control Set-Up 46
- Replacing Light Bulbs 48
- Re-installing Windows 49
- Checking Operation and Aeration 50
- Installing Plates and Barrier Screens 51

Wiring Diagram 52
Commonwealth of Massachusetts 53
Appendix A - Lighting Instructions Plate 55
Appendix B - Remote Control Operation 56
Appendix C - Wall Switch Operation 63
Appendix D - HeatShift 64
Appendix E - Spare Parts 82

Fireplace Safety

This manual contains very important information about the safe installation and operation of the fireplace. Read and understand all instructions carefully before installing and operating the fireplace. Failure to follow these instructions may result in possible fire hazard and will void the warranty.

Replacement manuals are available by contacting the Valor Customer Service at 1-800-468-2567, or by visiting valorfireplaces.com.

⚠ WARNING: Extremely Hot!

Heat and flammability

- Some parts of the fireplace are extremely hot, particularly the glass windows. Use the barrier screens provided or a gate to reduce the risk of severe burns.
- The glass windows can exceed 500°F at full capacity.
- Always keep the appliance clear and free from combustible materials, gasoline, and other flammable vapors and liquids.
- Be aware of hot wall surfaces! The walls directly above the fireplace can get very hot when the fireplace heats. Although safe, it may reach temperatures in excess of 200°F (93°C) depending on choice of optional accessories. Do not touch!
- Be aware of hot hearth/floor surfaces! Any projections directly around the fireplace can get very hot when the fireplace heats. Although safe, they may reach temperatures in excess of 200°F (93°C)depending on elevation of hearth. Be careful of touching these! Temperature of projection surfaces will be reduced when barrier screens are installed.
- Some materials or items, although safe, may discolor, shrink, warp, crack, peel, and so on because of the heat produced by the fireplace. Avoid placing candles, paintings, photos and other combustible objects sensitive to heat or furniture within 36 inches (0.9 m) around the fireplace.
- Due to it high temperatures, the appliance should be located out of traffic areas and away from furniture and draperies.
- Clothing or flammable material should not be placed on or near the appliance.

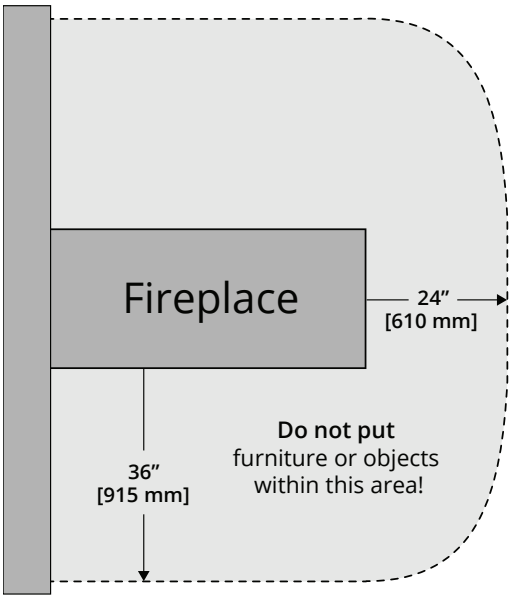

Barrier Screen and Safety

- A barrier designed to reduce the risk of burns from the hot viewing glass is provided with this appliance and shall be installed for the protection of children and other at-risk individuals.
- Children and adults should be alerted to the hazards of high surface temperature and should stay away to avoid burns or clothing ignition.
- Young children should be carefully supervised when they are in the same room as the appliance. Toddlers, young children, and others may be susceptible to accidental contact burns. A physical barrier is recommended if there are at-risk individuals in the house. To restrict access to a fireplace or stove, install an adjustable safety gate to keep toddlers, young children, and other at-risk individuals out of the room and away from hot surfaces.
- Any safety screen, guard, or barrier removed for servicing an appliance must be replaced prior to operating the appliance.

Fireplace Safety

Glass windows

WARNING

Do not operate this appliance with the glass front removed, cracked, or broken.

Do not strike or slam the glass front.

Replacement of the glass front should be performed by a licensed or qualified service person.

- The glass front assemblies must be in place and sealed before the unit can be placed into safe operation.
- The glass front assemblies must only be replaced as complete units, as supplied by the fireplace manufacturer. No substitute material may be used.
- Do not use abrasive cleaners on the glass front assemblies. Do not attempt to clean the glass when it is hot.

Venting

- This unit must be used with a vent system as described in this manual. No other vent system or components may be used.
- Never obstruct the flow of combustion and ventilation air. Keep the front of the appliance clear of all obstacles and materials for servicing and proper operation.
- This gas fireplace and vent assembly must be vented directly to the outside and must never be attached to a chimney serving a separate solid fuel burning appliance. Each gas appliance must use a separate vent system. Common vent systems are prohibited.

Intended use

- This appliance is designed and approved as a supplemental heater and provides the potential for most energy conservation when used while attended. The use of an alternate primary heat source is advisable.
- This unit is not for use with solid fuel.
- Do not use this heater as a temporary source of heat during construction.

Installation and Servicing

- Installation and repair should be done by a qualified service person. The appliance should be inspected before use and at least annually by a professional service person. More frequent cleaning might be required due to excessive lint from carpeting, bedding material, et cetera. It is imperative that control compartments, burners, and circulating air passageways of the appliance be kept clean.
- Do not use this appliance is any part has been under water. Immediately call a qualified service technician to inspect the appliance and to replace any part of the control system and any gas control that has been under water.

WARNING

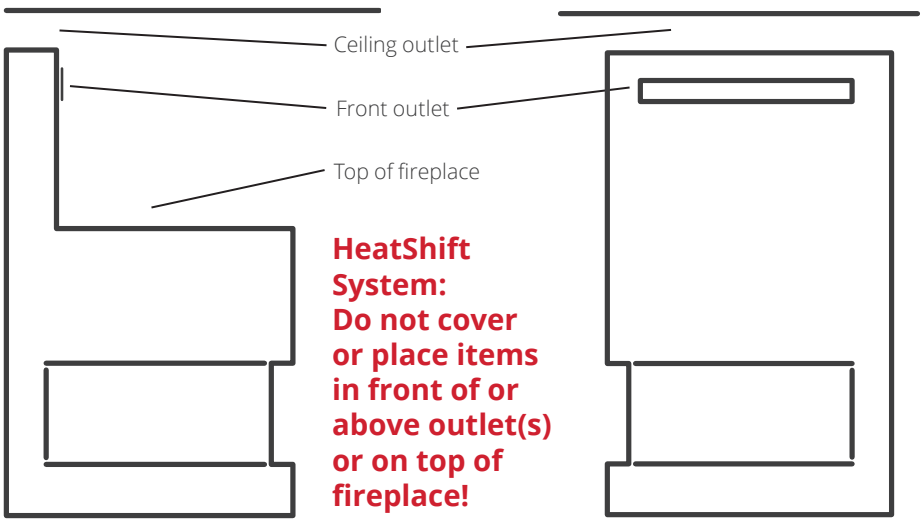

Specifications

Approval & Codes

This appliance is certified to ANSI Z21.88 /CSA 2.33 American National Standard / CSA Standard for Vented Gas Fireplace Heaters for use in Canada and USA, and to CGA 2.17-91 High Altitude Standard in Canada. This appliance is for direct vent installations.

This appliance complies with CSA P.4.1-15 Testing method for measuring annual fireplace efficiencies.

The installation must conform to local codes or, in the absence of local codes, with the National Fuel Gas Code, ANSI Z223.1/NFPA 54 or the Natural Gas and Propane Installation Code CAN/CGA-B149.1. Only qualified licensed or trained personnel should install this appliance.

This appliance must be electrically grounded in accordance with local codes, or, in the absence of local codes, with the National Electrical Code, ANSI/NFPA 70 or the Canadian Electrical Code, CSA C22.1.

Ratings

Model	2100PKN	2100PKP
Gas	Natural	Propane
Altitude (Ft.)*	0-4,500 feet*	
Input Maximum (Btu/h)	25,000	25,000
Input Minimum (Btu/h)	14,000	14,000
Manifold Pressure (in w.c.)	3.5”	10”
Minimum Supply Pressure (in w.c.)	5”	11”
Maximum Supply Pressure (in w.c.)	10”	14”
Main Burner Injector Marking	42	53
Pilot Injector Marking	51	30
Min. Rate By-Pass Screw	185	125

*High Altitude Installations

Input ratings are shown in BTU per hour and are certified without deration for elevations up to 4,500 feet (1,370 m) above sea level.

For elevations above 4,500 feet (1,370 m) in USA, installations must be in accordance with the current ANSI Z223.1 and/or local codes having jurisdiction. Heating value of gas in some areas is reduced to compensate for elevation—consult your local gas utility to confirm.

For installations at elevations above 4,500 feet (1,370 m) in Canada, please consult provincial and/or local authorities having jurisdiction.

Supply Gas

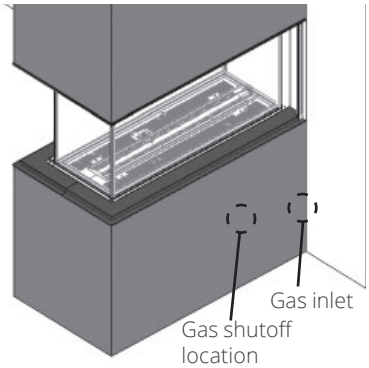

Heater engine 2100PKN is used with natural gas.

Heater engine 2100PKP is used with propane gas.

The supply pressure must be between the limits shown in the Ratings section.

The supply connection is 1/2” NPT male and located on the wall end of the firebox. A shutoff valve is supplied on the supply line to isolate the unit during service. See *Connecting Gas Supply* on page 33 for details.

Conversion Kits

The 2100P is supplied as natural gas or propane gas and is field convertible between fuels. See instructions packaged with the conversion kits for further information.

Electrical

The 2100P is designed to run on battery power and does not require an electrical source to operate as a heater. However, it requires electrical power to operate the overhead lighting, the optional WiFi.

⚠ WARNING

NO electrical connections allowed for any outdoor installation.

HeatShift System Required

The 2200K fireplace **MUST** be installed with HeatShift, a convection system that redistributes the warm air flow away from the fireplace opening to a more desirable location using natural convection, without use of a fan.

The warm air flow may be relocated to a position higher up the wall, out the side walls, or even to another room. The result is much cooler wall temperatures above the fireplace opening for locating television, artwork, etc.

Refer to *Appendix D - HeatShift* pages 64–80 for more information.

Outdoor Conversion Kit

The 2200K models are supplied standard for indoor applications and may be adapted for installation in specific “outdoor” applications protected from weather as defined in the GV60CKO outdoor conversion kit manual.

Kits & Accessories

Required Kits

4006979	LX1 Barrier Screen—long panels (2)
4006865	LX1 Barrier Screen—short panel
Fuel Beds (choose one)	
2100BLK	Birchwood Log Kit
2100RSS	Rock and Shale Set
2100DWK	Driftwood Log Kit
2100DGM	Decorative Glass Murano Set
Liners (choose one)	
2100RGP	Reflective Glass Panel
2200FBP	Fluted Black Panel
HeatShift Outlets (choose one)	
LDK3	14" Plenum (2), includes grilles
LDK4	38" Plenum (compatible with Remote Blower Kit 1270RBK)
LDK7	Duct Termination Plates (2) for wall valance discharge ONLY
LDK9	30" Plenum
2100HSC	HeatShift Canopy kit
Approved Venting Components	
See following pages for Approved Venting Components list.	

Above information accurate at the time of printing and subject to change without notice.

Optional Accessories

HeatShift Accessories (choose as needed)	
LDK5	38" Finishing Frame, to use with LDK4
LDK6	5" diameter Aluminum 2-ply Flex Kit (qty 2 x 10' lengths, may be cut to required length)
LDK10	30" louver for LDK9
Gas Conversion Kits	
2100NGK	Natural Gas Conversion Kit
2100PGK	Propane Gas Conversion Kit
Other Accessories	
1270RBK*	HeatSplit Remote Blower Kit (requires use of HeatShift LDK4 kit)
2100SFK	Steel Framing Kit
GV60WIFI*	WiFi Module
GV60CKO	Outdoor Fireplace Conversion Kit*
Hearth Gate	Hearth gates such as Cardinal's VersaGate are available at retail stores carrying safety products for children.

⚠ WARNING

The HeatShift System MUST be installed on this appliance!

⚠ WARNING

*** NO electrical connections allowed for any outdoor installation.**

Approved Venting Components

Approved Direct Vent Suppliers for Valor Model 2100							
Venting Parts Description			Venting Parts Code / availability by Manufacturer				
			DURA-VENT	SELKIRK	ICC EXCEL DIRECT	MILES INDUSTRIES	BDM
Termination Caps	Horizontal	Standard Co-axial	46DVA-HC	4DT-AHC	TM-4HT	658DVK2	DVR6-HC
		Deluxe Co-axial	—	—	TM-4RHT	—	DVR6-HCP
		High Wind Co-axial	—	—	—	—	—
	Vertical	Standard Co-axial	46DVA-VC	4DT-VT	—	—	DVR6-VCH DVR6-VCSB
		High Wind Co-axial	46DVA-VCH	—	TM-4SVT	—	—
		Extended Co-axial	46DVA-VCE	—	—	—	—
		Co-linear	—	—	TM-IVT	559CLT	940033B 940034B 940033HWS 940033RD
	Snorkel, 14" Rise		46DVA-SNK14	4DT-ST14	TM-4ST14	—	DVR6-SNK14
	Snorkel, 36" Rise		46DVA-SNK36	4DT-ST36	TM-4ST36	—	DVR6-SNK36
Vent Adapters / Couplers		Universal Adapter 3" Flex Coupler	2150	—	TM-CFAA3	—	95090390
		Co-linear Flex Connector	46DVA-ADF	—	—	—	—
		Co-axial-to-Co-linear Adapter	46DVA-GCL 46DVA-CLAA	—	TM-4CAA	—	DVR6-A34
		Co-linear-to-Co-axial Adapter	46DVA-GK 46DVA-CLTA	—	TM-4CTA	—	—
		DV to B-Vent Adapter	—	—	—	—	—
Aluminum Flexible Liner		3" diameter	NOTE: 2-ply liner approved to CAN/ULC S635 suitable for venting gas appliances. As manufactured by Z-Flex, Flexmasters or others.				
			2280 Series	AF3-35L	TM-ALK33	—	952703
					TM-ALT33		952704
Adjustable Pipe Length and Pipe Extensions 4" x 6-5/8"		Galvanized or Black	46DVA-08A 46DVA-08AB (3" to 7")	—	—	—	DVR6-08A DVR6-08AB
		Galvanized or Black	46DVA-16A 46DVA-16AB (3" to 14-1/2")	—	TC-4DLS1 TC-4DLS1B	—	DVR6-16A DVR6-16AB
		Galvanized or Black	46DVA-17TA 46DVA-17TAB (11" to 17")	—	TC-4DLS2 TC-4DLS2B (1-7/8" – 21")	—	—
		Galvanized or Black	46DVA-24TA 46DVA-24TAB (17" to 24")	—	TC-4DLA30 TC-DLA30B (16.5" – 29")	—	—
		Co-axial Flex	46DVA-36FF 46DVA-60FF 46DVA-120FF	—	—	—	—
DV Elbows	30°	Galvanized	46DVA-E30	—	—	—	—
	45°	Galvanized	46DVA-E45 (swivel)	4DT-EL45	TE-4DE45	—	DVR6-E45
		Black	46DVA-E45B (swivel)	4DT-EL45(B)	TE-4DE45B	—	DVR6-E45B
	60°	Galvanized	46DVA-E60	—	—	—	—
	90°	Galvanized	46DVA-E90 (swivel)	4DT-EL90	TE-4DE90	—	DVR6-E90
		Black	46DAV-E90B (swivel)	4DT-EL90(B)	TE-4DE90B	—	DVR6-E90B

Approved Venting Components

Venting Parts Description			Venting Parts Code / availability by Manufacturer				
			DURA-VENT	SELKIRK	ICC EXCEL DIRECT	MILES INDUSTRIES	BDM
Pipes 4" x 6 5/8" (ID x OD)	6" long	Galvanized	46DVA-06	4DT-06	TC-4DL6	—	DVR6-06
		Black	46DVA-06B	4DT-06(B)	TC-4DL6B		DVR6-06B
	7" long	Galvanized	—	—	—	—	—
		Black					
	9" long	Galvanized	46DVA-09	4DT-09	TC-4DL9	—	DVR6-09
		Black	46DVA-09B	4DT-09(B)	TC-4DL9B		DVR6-09B
	12" long	Galvanized	46DVA-12	4DT-12	TC-4DL1	—	DVR6-12
		Black	46DVA-12B	4DT-12(B)	TC-4DL1B		DVR6-12B
	18" long	Galvanized	46DVA-18	4DT-18	—	—	DVR6-18
		Black	46DVA-18B	4DT-18(B)			DVR6-18B
	24" long	Galvanized	46DVA-24	4DT-24	TC-4DL2	—	DVR6-24
		Black	46DVA-24B	4DT-24(B)	TC-4DL2B		DVR6-24B
	36" long	Galvanized	46DVA-36	4DT-36	TC-4DL3	—	DVR6-36
		Black	46DVA-36B	4DT-36(B)	TC-4DL3B		DVR6-36B
	48" long	Galvanized	46DVA-48	4DT-48	TC-4DL4	—	DVR6-48
		Black	46DVA-48B	4DT-48(B)	TC-4DL4B		DVR6-48B
Flashings	Roof Flashing 0/12-6/12		46DVA-F6	4DT-AF6	TF-4FA	—	DVR6-AF012
	Roof Flashing 7/12-12/12		46DVA-F12	4DT-AF12	TF-4FB	—	DVR6-AF712
	Flat Roof Flashing		46DVA-FF	—	TF-4F	—	DVR6-TCF
	Masonry Flashing		—	—	TF-4MF	559FSK	—
	New Siding Flashing		—	—	—	658NSFK	—
Various Venting System Parts	Wall Thimble		46DVA-WT	4DT-WT1	TM-4WT	—	DVR6-WTU
	Storm Collar		46DVA-SC	4DT-SC	TM-SC	—	DVT68-SC
	Decorative Plate		46DVA-DC	—	TM-4TR TM-4TP	—	DVR6-DC
	Ceiling Support	Cathedral	46DVA-CS	4DT-CCS	TM-4SS	—	DVR6-CS
		Regular	—	4DT-CS	—	—	—
	Ceiling Firestop		46DVA-FS	4DT-FS	TM-4RDS TM-CS	—	DVR6-CFS
	Attic Radiation Shield / Firestop		46DVA-IS	4DT-AIS	TM-4AS	—	DVR6-AIS
	Wall Strap		46DVA-WS	4DT-WSB	TM-WS	—	DVR6-WS
	Vinyl Siding Standoff		46DVA-VSS	4DT-VSS (before siding) 4DT-VSSB (after siding)	TM-VSS	—	DVR6-VSS
	Elbow Strap / Offset Support		46DVA-ES	4DT-OS	TM-OS	—	DVR6-ES
	Terminal Guard		46DVA-WG	—	TM-HTS TM-RHTS	845TG 658TG	DVR6-SHRD

Notes:
1. Follow instructions supplied with each manufacturer's components.
2. Unless otherwise specified, all the parts and assemblies from the above table are to be used with 4" x 6-5/8" pipes.
3. Do not mix components from different vent manufacturers, except Miles Industries', approved for use with those of other manufacturers.

Dimensions and Location

Dimensions

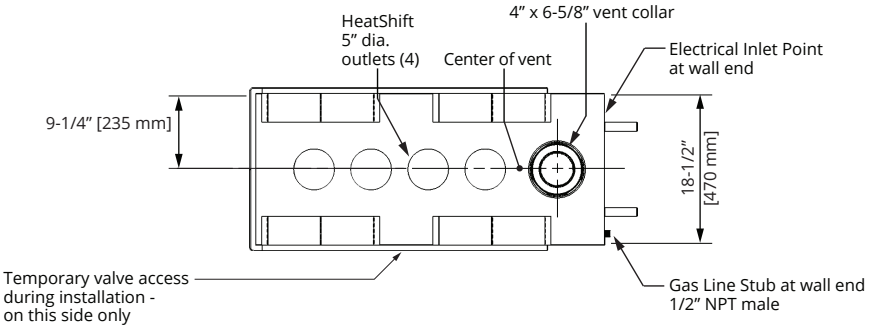

Top View

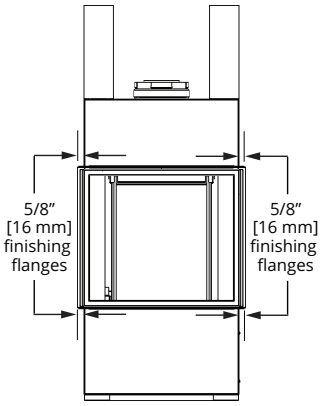

End View

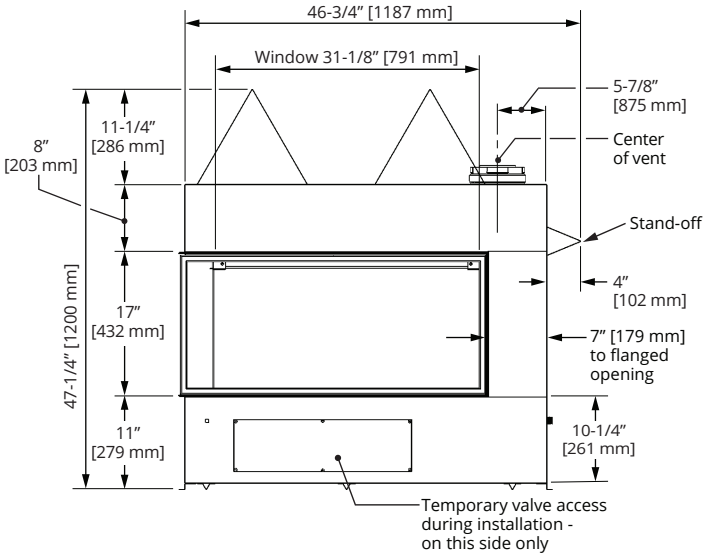

Front View

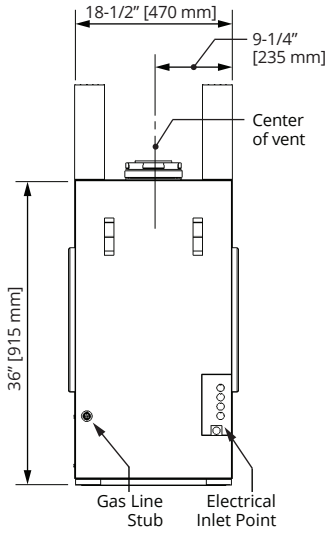

Wall End View

Location

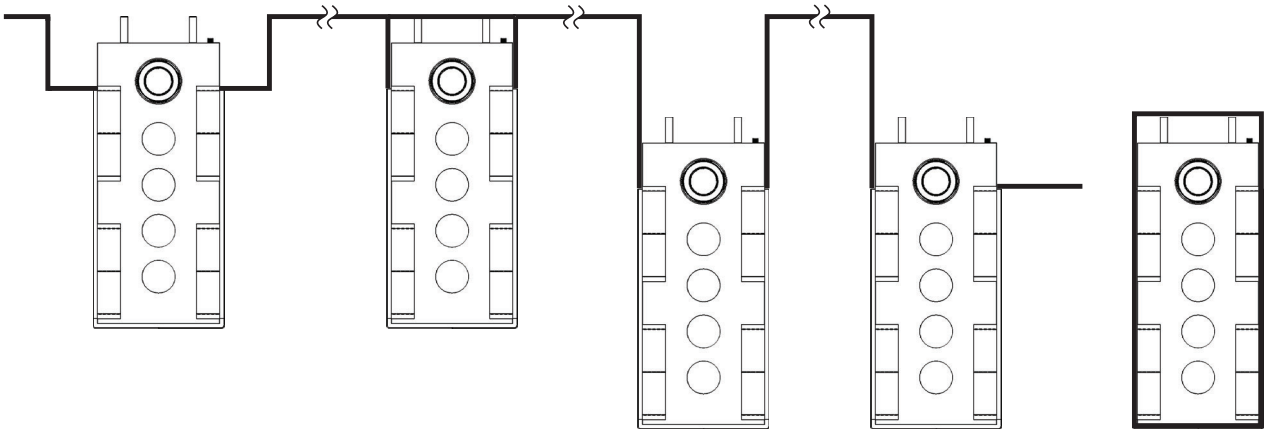

Installation Planning

Caution

Only qualified, license, or trained personnel should install this appliance.

1. YOU NEED TO KNOW FROM THE HOMEOWNER:
   - The thickness and type of wall finish around the appliance.
   - What accessories (if any) will be installed with this unit.
2. Unpack the appliance but keep the barrier screens in their packaging to protect them. Recycle the packaging.
3. Remove one of the windows (see page 28) and remove all items inside the firebox.
4. Check that you have everything, using the Pack Content sheet. Also, check that you have:
   - A fuel bed (packed separately)
   - A liner (packed separately)
   - Remote Battery and Wall Switch Kit
   - HeatShift Kit (mandatory, packed separately)
   - Gas conversion kit (if necessary)
   - Venting accessories
   - Electrical accessories*
5. Carefully read the Installers Checklist included with the fireplace for the installation sequence.

WARNING

HeatShift System MUST be installed on this appliance!

Please note that the following steps must be done BEFORE the appliance is placed in its final position in the cavity since the connections are done from the back of the appliance:

- electrical connections*
- gas connections
- gas conversion (if needed)
- wiring of the Remote Battery & Wall Switck Kit RBWSK

WARNING

*** NO electrical connections allowed for any outdoor installation.**

Installation Planning

Overview - Wood Framing

⚠ WARNING

Ensure weight of wall above is NOT carried by the appliance.

Installers can implement an all-wood framing installation for full height installations. Included standoffs on top of the unit give minimum clearance for combustible framing materials from the top of the unit.

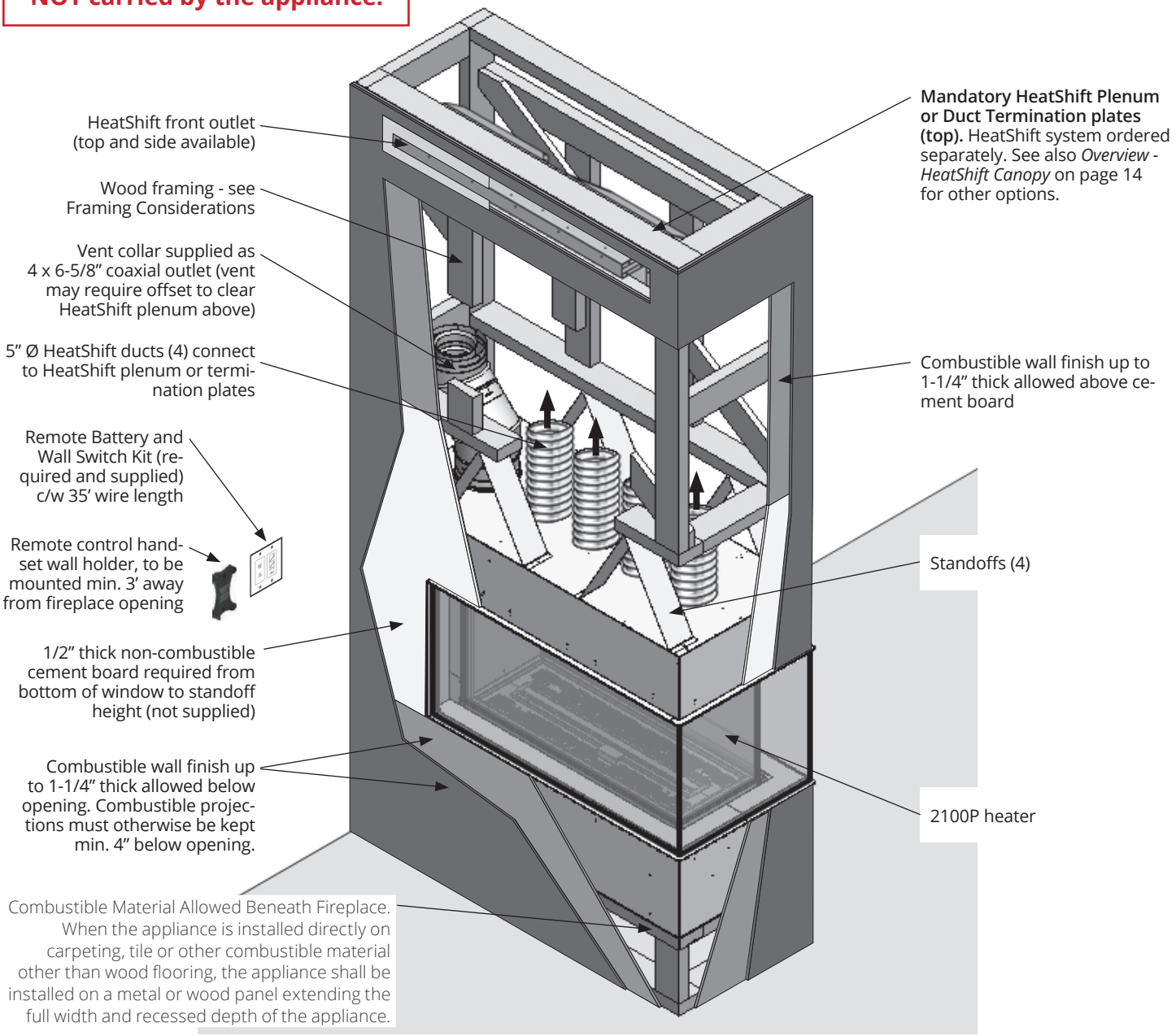

⚠ WARNING

Some materials or items, although safe, may discolor, shrink, warp, crack, peel, and so on because of the heat produced by the fireplace. Avoid placing candles, paintings, photos, and other items sensitive to heat around the fireplace.

NOTE

This appliance may be installed in outdoor, weather protected environments as defined in the GV60CKO Outdoor Conversion Kit instruction manual.

However, NO electrical connections are allowed for any outdoor installation.

Installation Planning

Overview - Steel Framing

⚠ WARNING

Ensure weight of wall above is NOT carried by the appliance.

The easiest way to frame a ceiling height installation, the Steel Framing Kit (2100SFK) allows installers to quickly and easily install a complete framing option purpose-built and size for the 2100P. Refer to the Installation Manual for this kit for more details

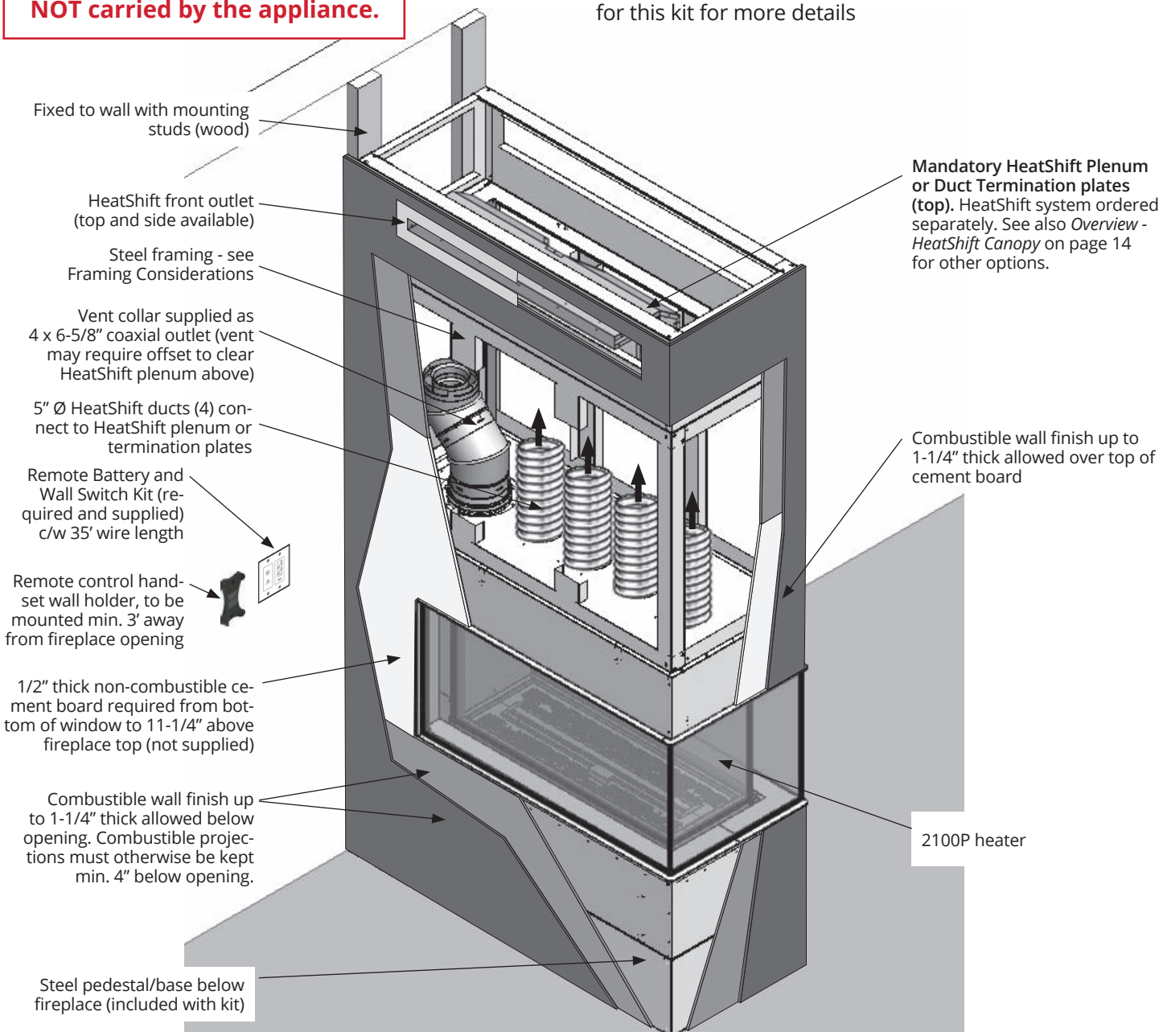

⚠ WARNING

Some materials or items, although safe, may discolor, shrink, warp, crack, peel, and so on because of the heat produced by the fireplace. Avoid placing candles, paintings, photos, and other items sensitive to heat around the fireplace.

NOTE

This appliance may be installed in outdoor, weather protected environments as defined in the GV60CKO Outdoor Conversion Kit instruction manual.

However, NO electrical connections are allowed for any outdoor installation.

Installation Planning Overview - HeatShift Canopy

⚠ WARNING

Ensure weight of wall above is NOT carried by the appliance.

For installations that do not extend vertically all the way to the ceiling, the HeatShift Canopy kit (2100HSC) allows the installer to install the fireplace and offset the HeatShift system to the side, maintaining visual space above the fireplace. Refer to the Installation Manual for this kit for more details.

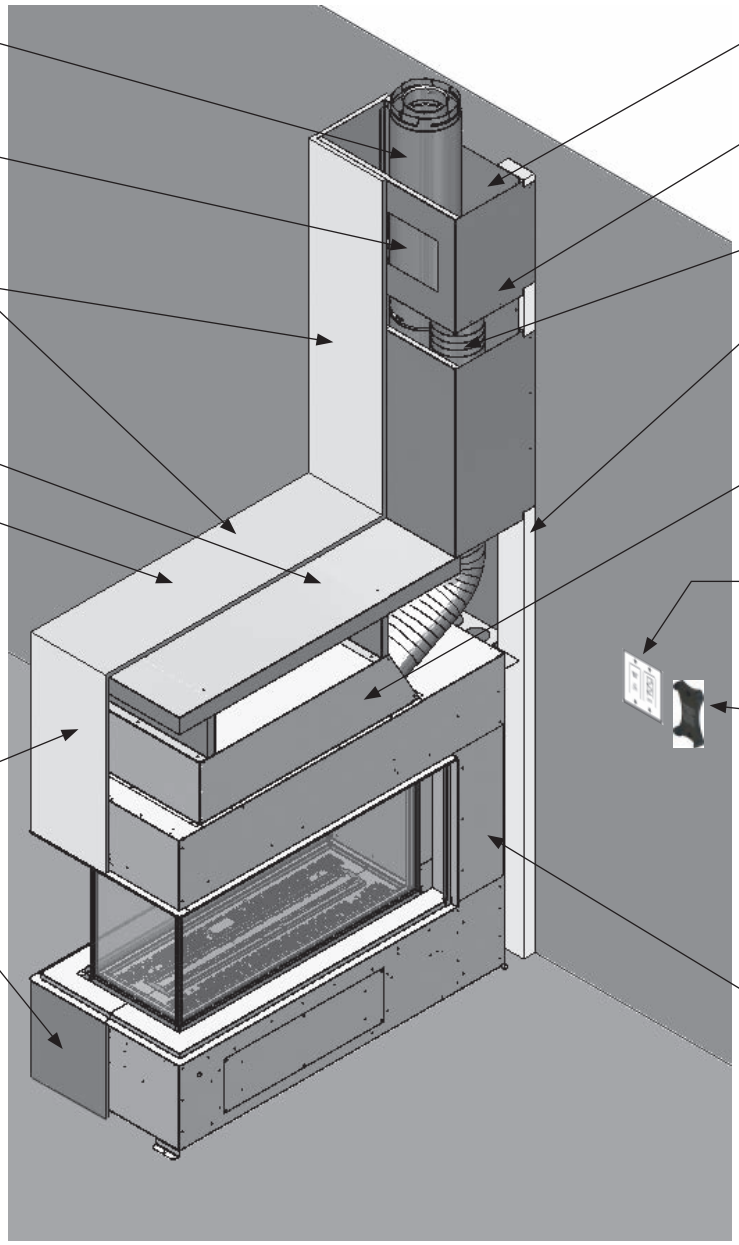

⚠ WARNING

Some materials or items, although safe, may discolor, shrink, warp, crack, peel, and so on because of the heat produced by the fireplace. Avoid placing candles, paintings, photos, and other items sensitive to heat around the fireplace.

NOTE

This appliance may be installed in outdoor, weather protected environments as defined in the GV60CKO Outdoor Conversion Kit instruction manual.

However, NO electrical connections are allowed for any outdoor installation.

Installation Planning

Clearances to Combustibles

⚠ WARNING

Ensure weight of wall above is NOT carried by the appliance.

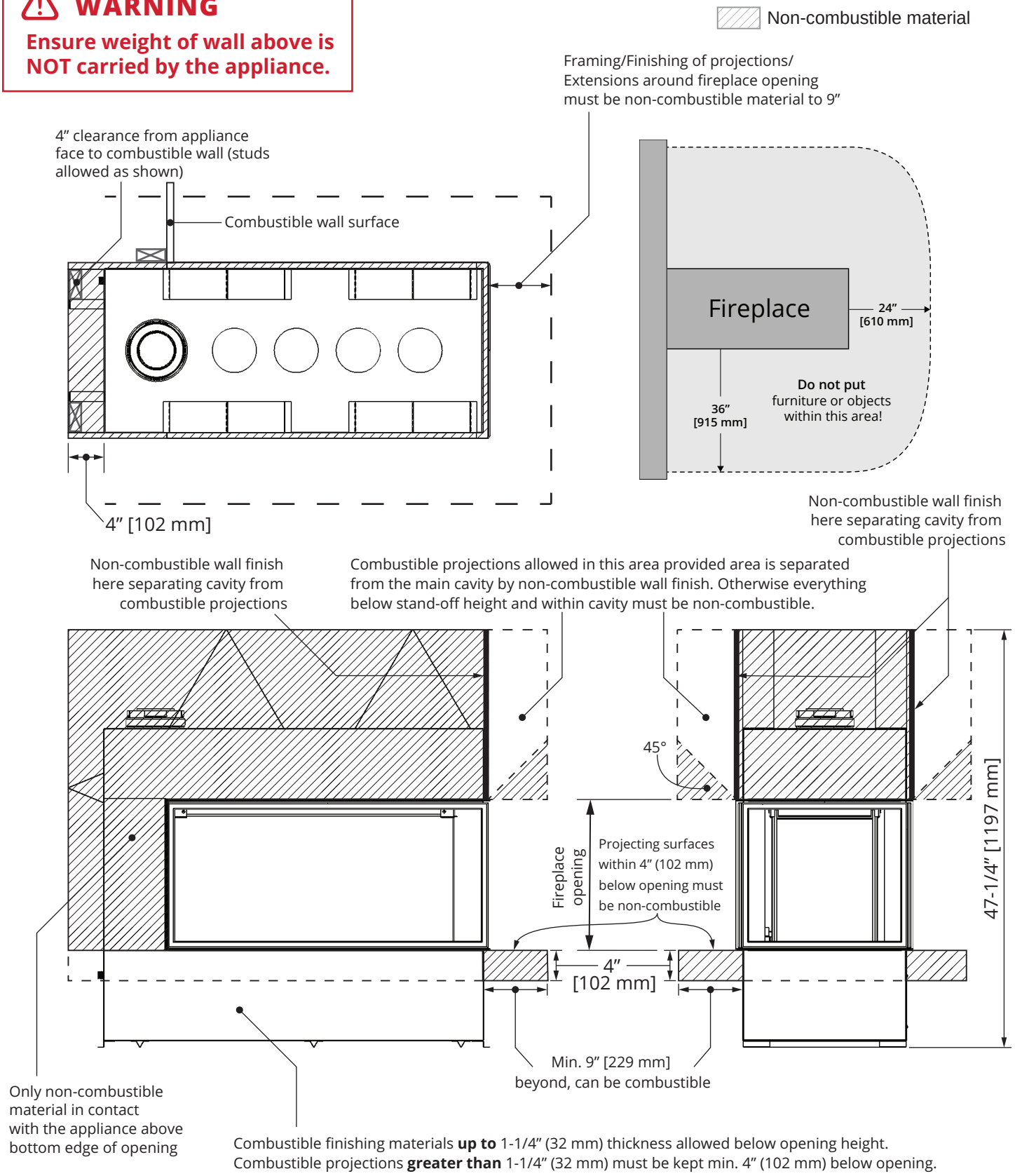

Installation Planning

Wood Framing

⚠ WARNING

Ensure weight of wall above is NOT carried by the appliance.

⚠ WARNING

There are restrictions for where drilling and screwing may take place. See page 20 for details.

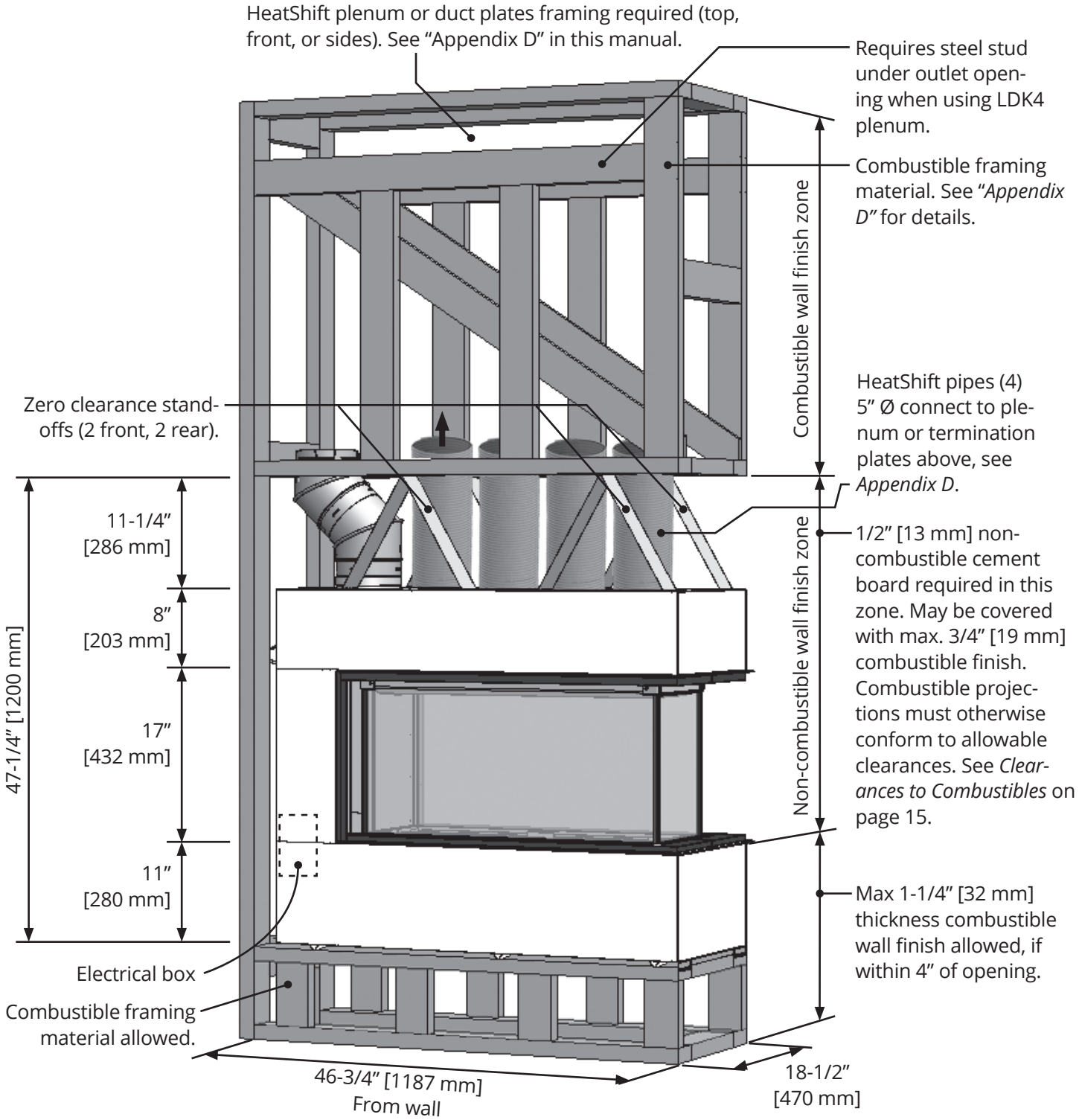

Installation Planning

⚠ WARNING

Ensure weight of wall above is NOT carried by the appliance.

⚠ WARNING

There are restrictions for where drilling and screwing may take place. See page 20 for details.

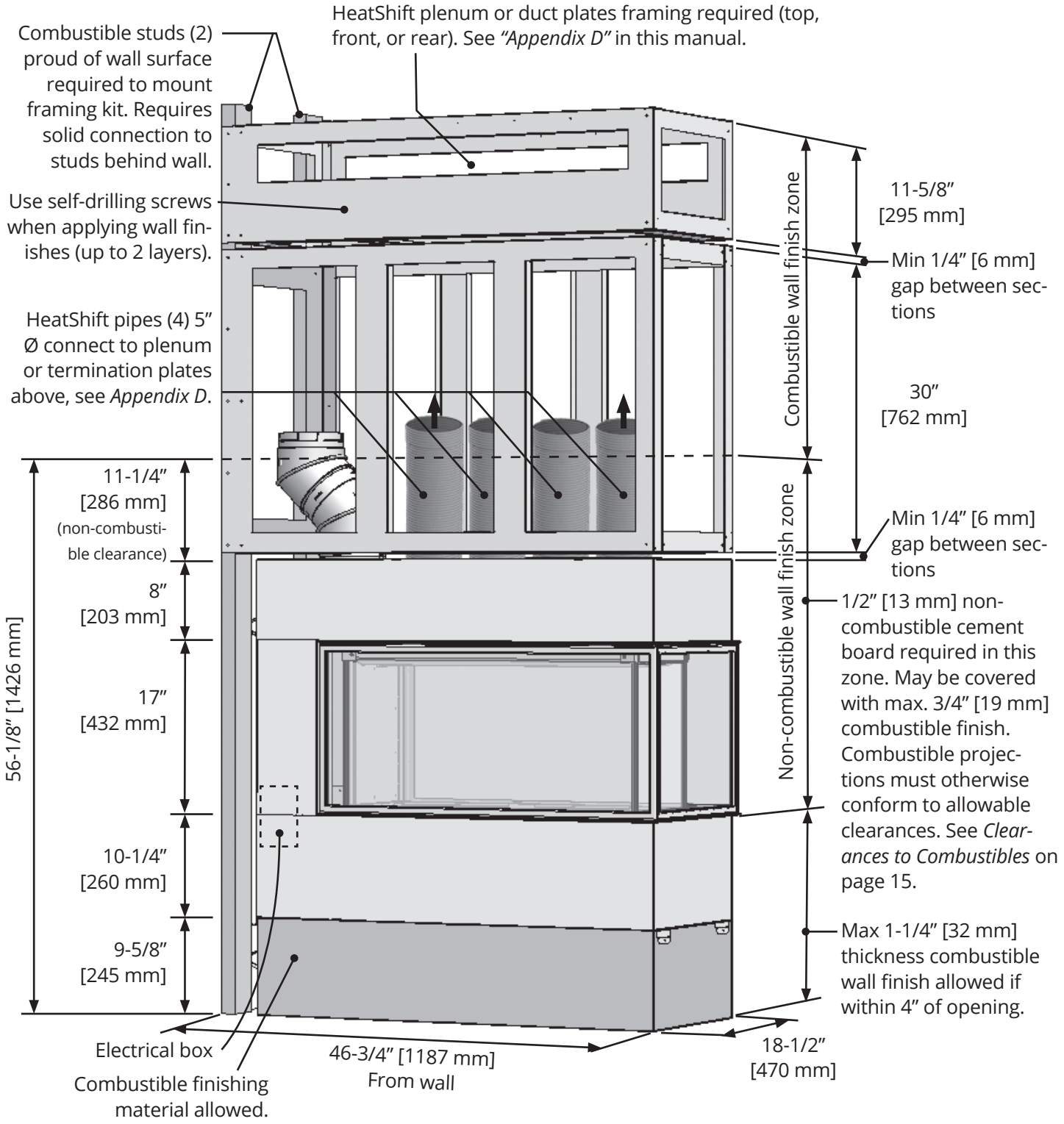

Minimum Vertical Vent

Below is the minimum vent height when the elbow is placed directly on the appliance collar*. If calculating the vent height using additional vent lengths, subtract approximately 1-1/2" for each pipe joint. For example, an additional 12" pipe section will add approximately 10-1/2" overall to this dimension.

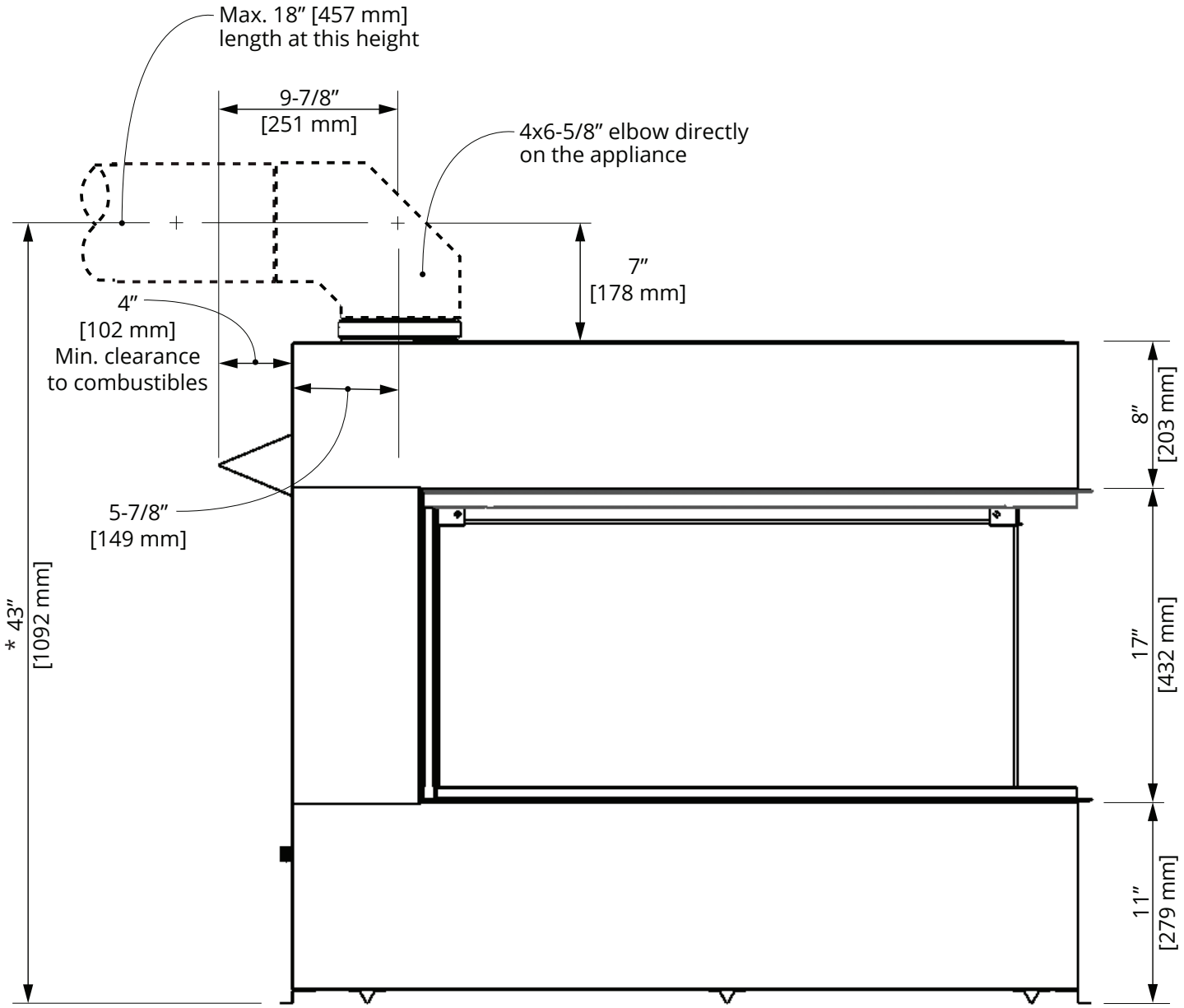

Non-Combustible Materials Specifications

Material which will not ignite and burn. Such materials are those consisting entirely of steel, iron, brick, tile, concrete, slate, glass, or plasters, or any combination thereof.

Materials that are reported as passing ASTM E 136, Standard Test Method for Behavior of Materials in a Vertical Tube Furnace at 750 °C shall be considered non-combustible materials.

Combustible Materials Specifications

Materials made of or surfaced with wood, compressed paper, plant fibers, plastics, or other material that can ignite and burn, whether flame proofed or not, or plastered or unplastered shall be considered combustible materials.

Non-Combustible Cement Board

The LX1 fireplace requires a 1/2" [13 mm] thick non-combustible cement board to be used as a wall surface as indicated in *Clearances to Combustibles* on page 15. This is generally defined as the area from the bottom of the fireplace's opening to the height of the standoffs (whether or not they are used).

Extending the cement board well beyond the minimum will help avoid cracking due to differential expansion of materials.

Pre-drill cement board with oversized holes and do not over-tighten screws to avoid cracking due to heat expansion.

Standard gypsum wall board may be used beyond the required perimeter of the cement board.

Preventing Cracking Wall Finishes

The HeatShift Duct Kit reduces the wall temperatures and minimizes the possibility of cracking wall finishes.

If a clean finish with no tile, etc, is desired, joints in the cement board and the transition to gypsum board will require special attention if future cracking is to controlled.

Shrinkage and differential movement of the framing and non-combustible wall board can transmit cracking through to tiles, etc.

Be aware that temperatures on the non-combustible wall surface above the appliance can exceed 200°F.

Below are some tips on how best to avoid any cracking:

- Allow materials to dry thoroughly before finishing the wall. Cement board has the ability to absorb up to 30% of its weight in water and may shrink as much as 1/8" over a 48" length when drying from a saturated condition. Running the fireplace before final finishing will help drive out moisture.
- Always pre-drill screw holes through cement board and use screws with self-milling head.
- Always use tape over joints.
- Behind joints, double up studs or use studs "on the flat" to add extra support to the joint. Adhesive on the backside of wall board behind any joints can help control differential movement.
- Use multiple, thinner coats of joint compound and allow to dry thoroughly between coats.
- Ensure framing materials are dry.
- After finishing the wall, introduce heat gradually to slowly dry any excess moisture rather than drying too fast.
- Avoid notching cement board or tiles around corners of window openings. Instead, provide a joint that intersects the corner.

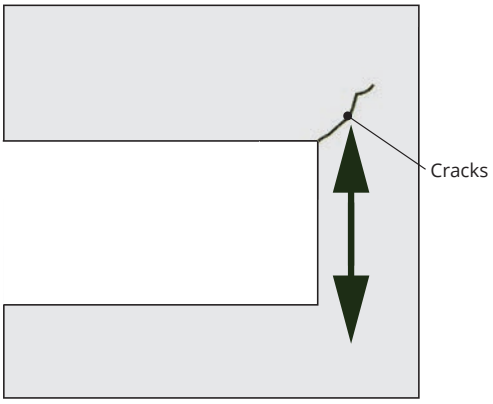

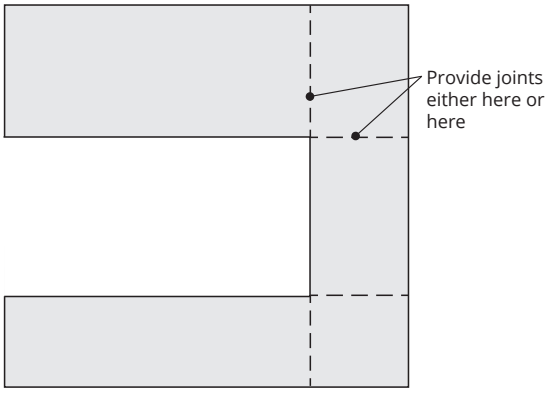

Screwing and Drilling Restrictions

Because of gas, controls, and electrical services behind the fireplace's walls, there are two areas where you must not drill or place screws.

See the diagrams at right for dimensional details of these restricted areas.

⚠ WARNING

DO NOT SCREW OR DRILL in the areas marked in the diagrams at right. Electric shock and/or explosion risk present.

⚠ WARNING

In ANY area of the fireplace (even outside of the restricted areas) choose a screw length that will not intrude into the interior of the fireplace more than 3/8" [10 mm] deep.

Gas and Controls Side

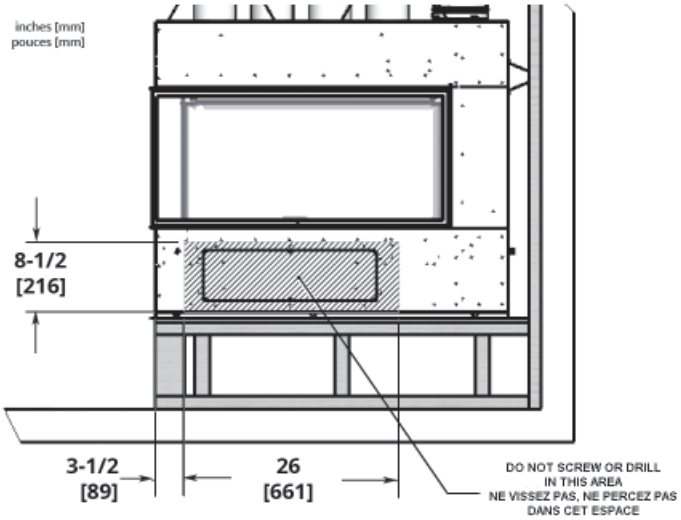

Electrical Side

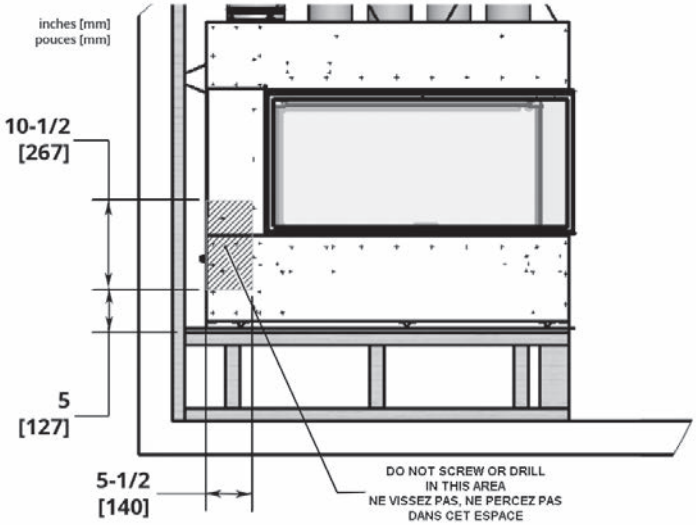

Venting

Vent Material

This unit is approved for installation using 4 x 6-5/8-inch co-axial direct vent pipe and accessories as listed in the *"Approved Venting Components"* table starting on page 8 of this manual. Follow the installation instructions supplied with the individual venting accessories.

This unit may also be converted to co-linear venting with two 3" pipes for use in solid-fuel burning fireplaces and chimneys using approved adapters and accessories. See *Approved Venting Components* on page 8.

Vent Sealing

Seal all **outer** coaxial pipe and elbow joints, including sectioned elbow **outer** joints, using high quality, high temperature 2 inch wide self-adhesive aluminum foil tape (Nashua-322-2 brand or similar). Wrap the tape completely around all outer joints and press firmly to seal.

A high temperature black silicone sealant may be used in the **outer** joints as a substitute to foil tape.

Ensure all the pipe joints have a minimum of 1 ¼ inch overlap.

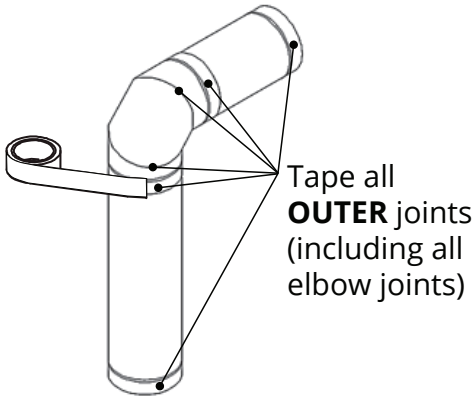

Wall Thickness

The appliance vent is suitable for penetrating a combustible wall assembly up to 8 inches in thickness. A non-combustible wall can be of any thickness up to the maximum horizontal run of vent pipe allowed for the particular installation.

All horizontal pipe runs must be graded 1/4 inch per foot upwards in the direction of the exhaust flow. The final pipe length, when terminating through the wall may be graded downwards slightly to prevent water migration.

Framing Vent in Combustible Walls & Ceilings

When penetrating through combustible walls and ceilings, frame a minimum of 10 in x 10 in opening and ensure that the insulation is kept clear of the vent pipe using either a wall thimble or an attic insulation shield. Follow the installation instructions supplied with the individual venting components.

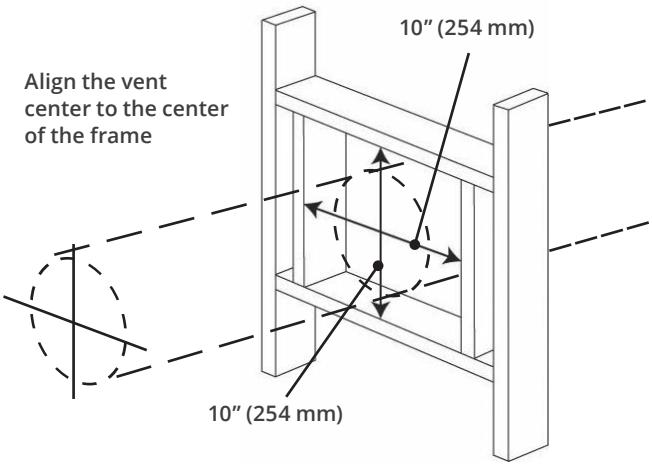

Important Installer Notice – Weather Sealing & Vapor Barriers

It is the installer's responsibility to ensure that vent installations through exterior walls are caulked and weatherproofed in such a manner as to:

- Prevent rain water from entering the wall from the weather side by adequately caulking the outer vent plate to the exterior wall surface.
- Prevent moisture inside the home from penetrating into the wall structure by ensuring the inside wall plate is adequately sealed to the inside vapor barrier.
- Prevent rain water and moisture from entering the walls by sealing the joints between the outer vent tube and the inner and outer wall plates.

We recommend the use of a high quality polyurethane sealant.

Typical Co-axial Venting Components

This appliance is supplied with 4x6-5/8" top vent collar. See *"Approved Venting Components"* starting on page 8 for a full list of recommended components.

IMPORTANT

Provide support for vertical pipe runs, particularly offsets. Do not rely on the appliance for support of long vertical pipe runs. Horizontal pipe runs should be supported every 4 feet using strapping.

CAUTION

A vertical rise in the venting system must be considered in the installation of the HeatShift plenum and ducts above the appliance in order to avoid interference with the appliance's vent pipe. See Appendix D—HeatShift System.

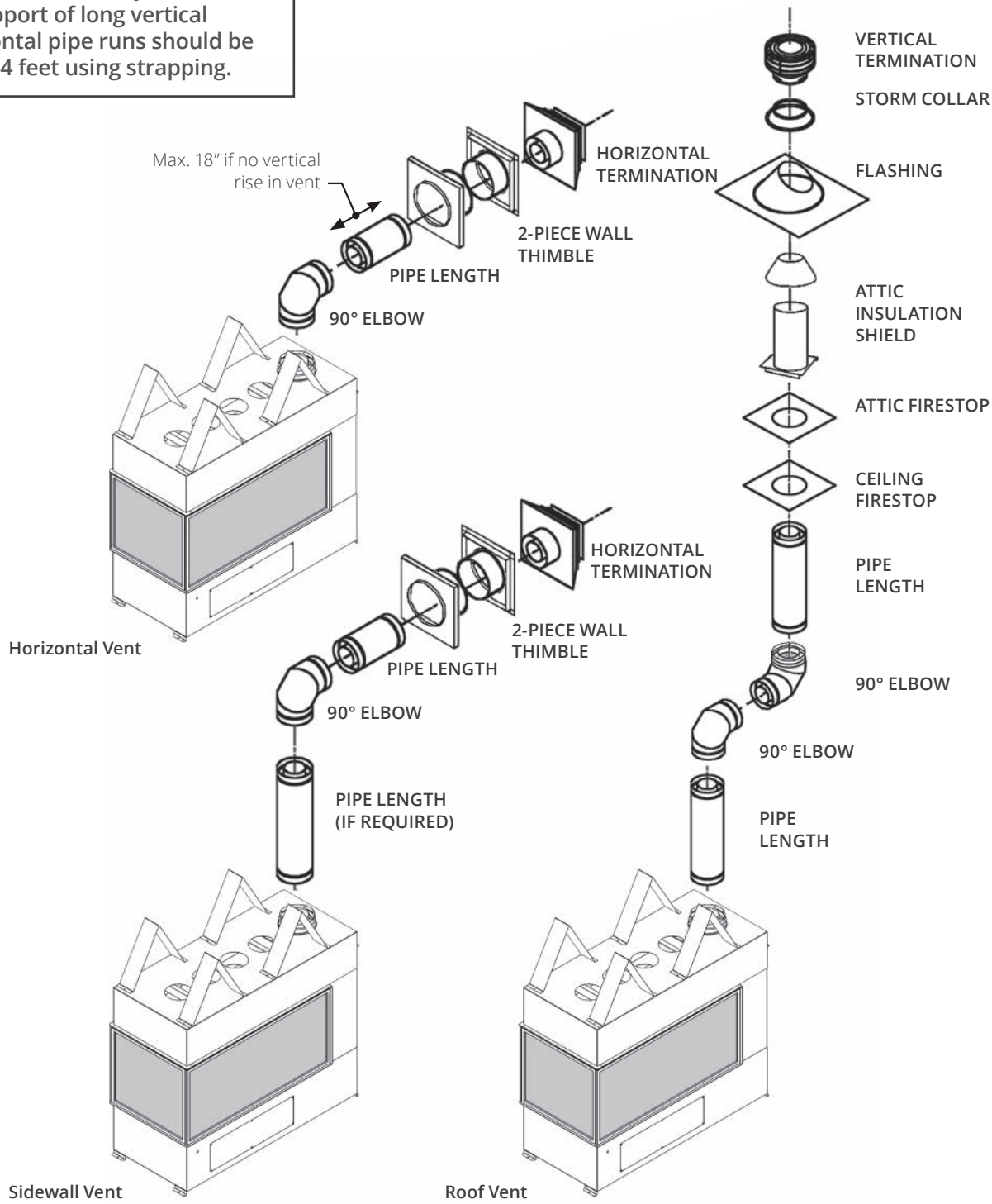

How to Read the Venting Chart

The chart below applies to co-axial roof or wall termination.

1. Maximum 18 inch horizontal pipe section allowed when using a 90° elbow directly at the appliance. 45 degrees elbow ok on horizontal plane, along with 18" horizontal pipe.
2. The total length of the vent pipe cannot exceed 40 feet.
3. The minimum vertical height with roof termination is 6 feet.
4. Any combination of rise and run can be used as long as they are within the allowable limits shown on the chart below.
5. A maximum of 4 x 90 degrees elbows—or equivalent (2 x 45 degrees = 90 degrees)—can be used.
6. Each 90° elbow installed on the horizontal plane is equivalent to a 3 feet horizontal pipe; therefore, 3 feet must be subtracted from allowable horizontal run. (45 degrees elbow is equivalent to 18 inches horizontal pipe.)
7. All horizontal pipe runs must be graded 1/4 inch per foot upwards in the direction of the exhaust flow. The final pipe length, when terminating through the wall may be graded downwards slightly to prevent water migration.
8. A restrictor adjustment is required for most installations having a vertical rise—see next section. **Note:** The restrictors are shipped installed at the exhaust exit of the firebox, in Position 1.

Venting Chart with 4" x 6-5/8" pipes

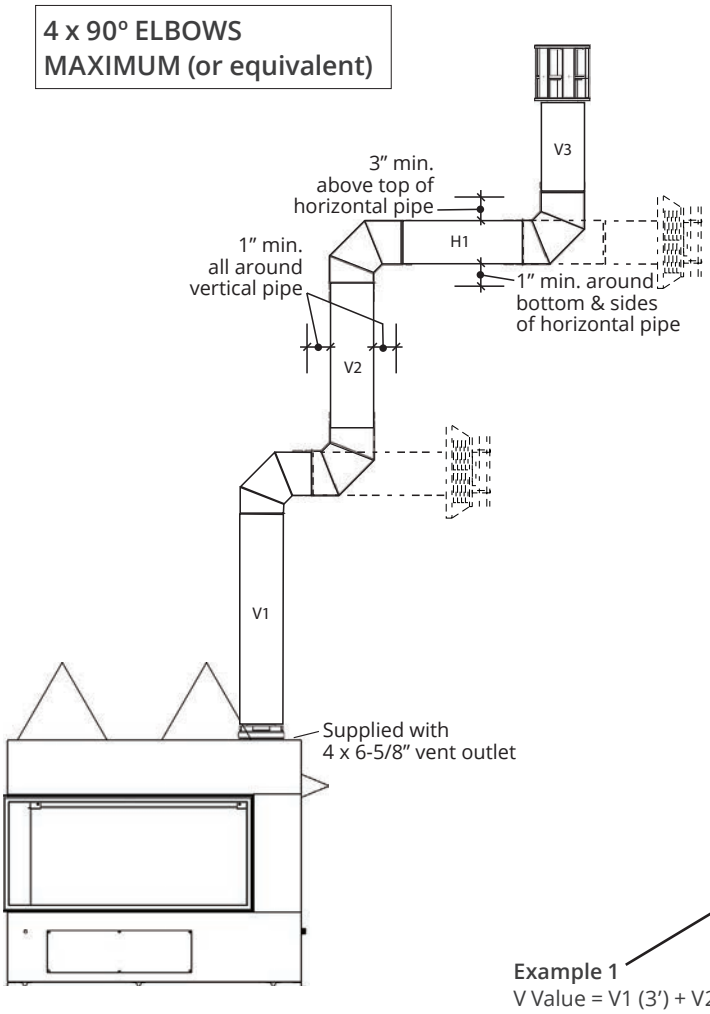

Venting Chart

Allowable Co-Axial Vent Configurations with restrictor positions

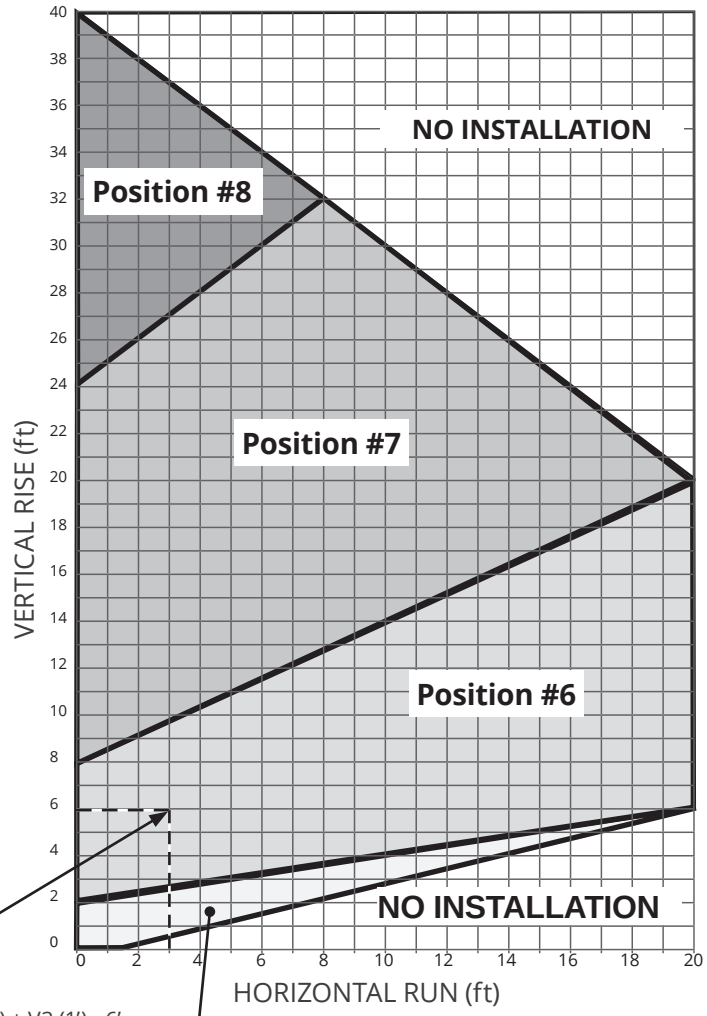

Example 1
V Value = V1 (3') + V2 (2') + V3 (1')= 6'
H Value = H1 (3') = 3'
Restrictor position #6 required

Position #1

Restrictor Adjustment

Restrictor Location

MOST INSTALLATIONS REQUIRE RESTRICTORS for improved flame picture and performance. The level of restriction required depends on the vertical rise in the venting system and, to a lesser degree, the horizontal run and number of elbows.

The amount of restriction is based on laboratory tests. The ideal restrictor position may vary slightly, especially when the vent pipe length is near the limits of the acceptable configurations for each type of restrictor.

The chart on the previous page shows the vent restrictor positions required relative to the length of the vent pipe. The fireplace is installed with the restrictor in the roof of the firebox at the exhaust exit, above the firebox baffle.

Note: Adjust restrictor position before liner installation.

To access the restrictor:

1. Remove the baffle (10 screws, five on each side of the baffle).

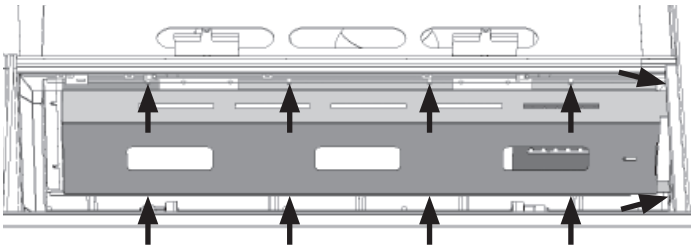

2. Adjust the restrictor as per your installation requirement set by the table on page 23.

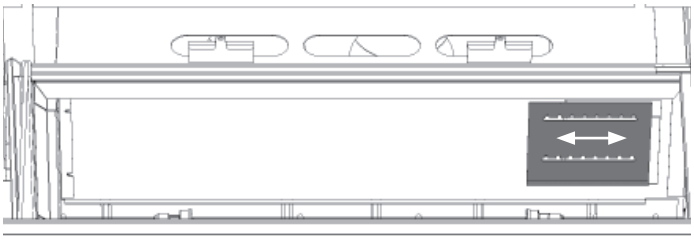

3. To adjust the restrictor, loosen (but do not remove) the two screws holding the plate in place, and slide it to the desired position.
   The position is set based on the number from the diagram below lining up with the screws. The plate is shown in Position 8 below.

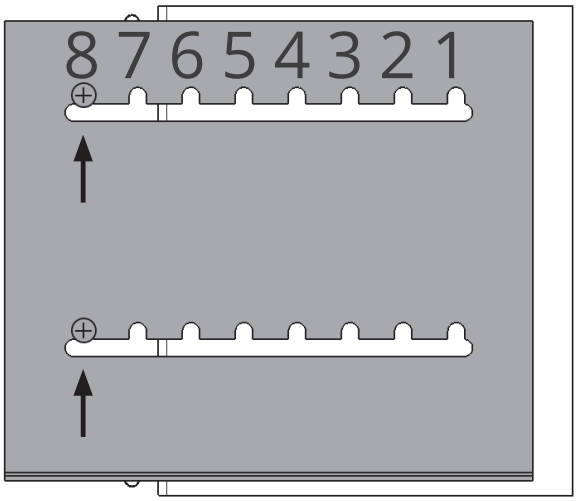

4. Tighten the screws when the plate is in the desired position. Replace the firebox baffle.

Horizontal Vent Termination Location

- The vent terminal must be located on an outside wall or through the roof.
- This direct vent appliance is designed to operate when an undisturbed airflow hits the outside vent terminal from any direction.
- The minimum clearances from this terminal that must be maintained when located on an outside wall are shown in figure below. Any reduction in these clearances could result in a disruption of the airflow or a safety hazard. Local codes or regulations may require greater clearances.
- The vent terminal must not be recessed into a wall or siding.
- The vent terminal should be positioned where any snowdrifts will not cover it.
- Sidewall vent terminations require a terminal guard such as 658TG or 845TG when accessible—within 7′ of ground.

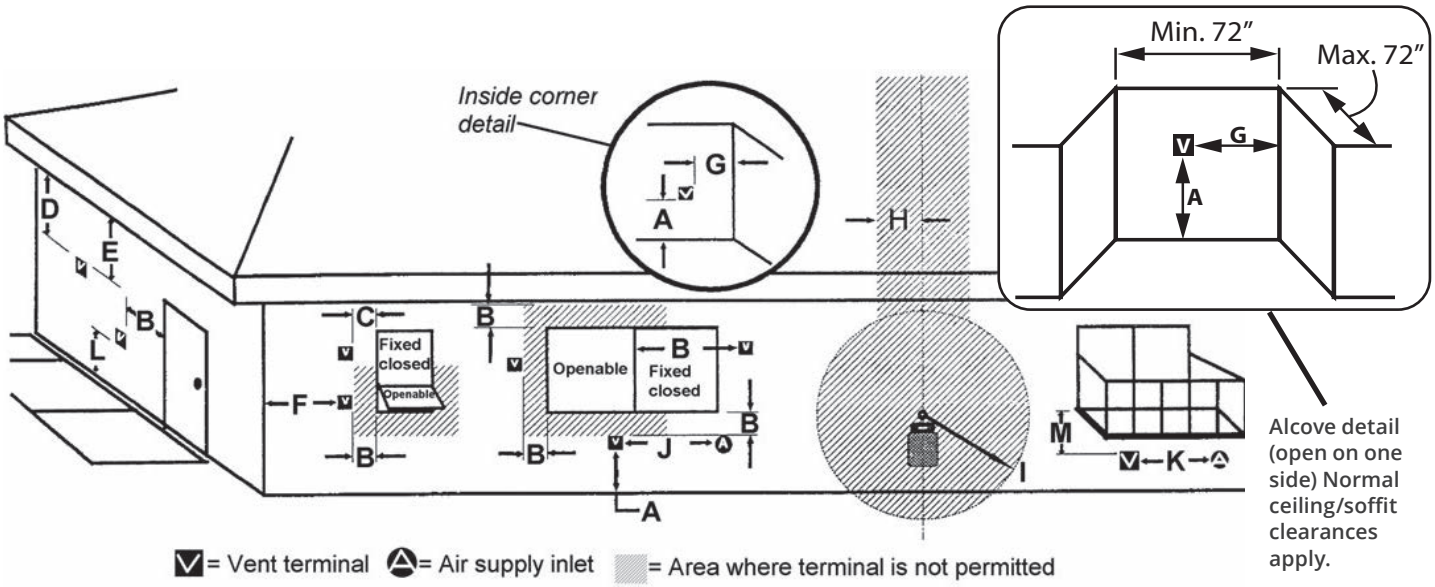

Alcove detail (open on one side) Normal ceiling/soffit clearances apply.

KEY	VENT TERMINAL LOCATIONS - MINIMUM DISTANCES	MINIMUM CLEARANCE	
		Inches	Cm
A	Clearance above grade, verandah, porch, deck or balcony	12	30
B	Clearance to window or door that may be opened	12	30
C	Clearance to permanently closed window (recommended to prevent condensation on window)	12	30
D	Vertical clearance to ventilated soffit located above the terminal within a horizontal distance of 2 feet (60 cm) from the center-line of the terminal	18	46
E	Clearance to unventilated soffit	12	30
F	Clearance to outside corner (measured from the center of vent)	12	30
G	Clearance to inside corner (measured from the center of vent)	12	30
H	Horizontal clearance to center-line of meter/regulator assembly located within 15 feet (4.6 m) below the terminal	36	90
I	Clearance to service regulator vent outlet	36	90
J	Clearance to non-mechanical air supply inlet to the building or the combustion air inlet to any other appliance	12	30
K	Clearance to a mechanical air supply inlet	72	180
L	Clearance above paved sidewalk or a paved driveway located on public property ***Note:*** *A vent must not terminate directly above a sidewalk or paved driveway, which is located between two single-family dwellings and serves both dwellings.* ***THIS DOES NOT APPLY to direct vent, non-consdensing appliances in the Province of Ontario.***	84	210
M	Clearance under a verandah, porch, deck or balcony *Only permitted if veranda, porch, deck or balcony is fully open on a minimum of 2 sides beneath the floor*	12	30

Note: Local codes and regulations may require different clearances.

Venting

Co-axial Termination

Vertical Vent Termination

Roof Pitch	Minimum "H" (feet)
Flat to 7/12	1'
Over 7/12 to 8/12	1.5'
Over 8/12 to 9/12	2'
Over 9/12 to 10/12	2.5'
Over 10/12 to 11/12	3.25'
Over 11/12 to 12/12	4'
Over 12/12 to 14/12	5'

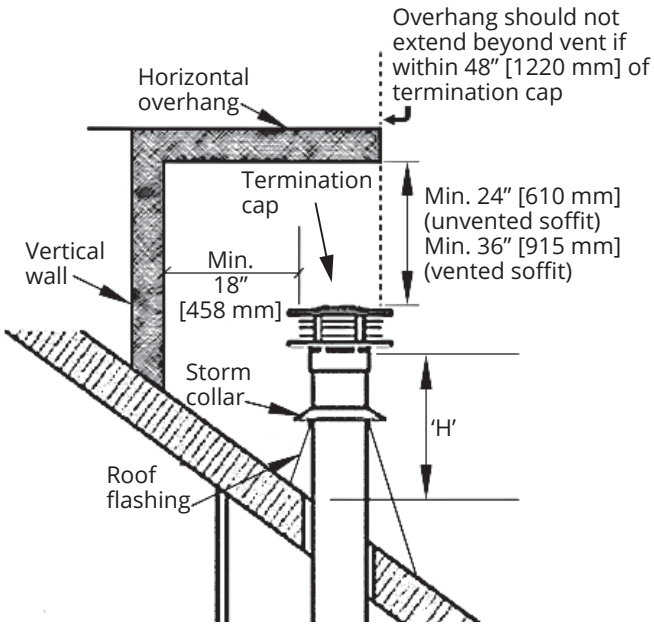

Co-linear Venting

Existing Fireplace Preparation

A few points must be considered before inserting the LX1 into an existing fireplace cavity. Generally, no modifications are allowed to the existing fireplace that will compromise the integrity of the existing fireplace.

Have the chimney swept and the fireplace cavity including ash dumps and clean-outs cleaned before installing the LX1 heater and vent liners. Any creosote or soot residue remaining in the fireplace cavity chimney or clean-out may cause odors or stains once the LX1 insert is installed. Consult with chimney sweep for information on how best to clean.

Attach the conversion plate/label "This fireplace has been converted..." supplied with the vent adapter **to the existing fireplace** using screws or other mechanical means and store any removed parts in back of the existing fireplace for future use.

NOTE

Co-linear portion of vent system may only be installed within a solid-fuel burning fireplace and chimney.

NOTE

Co-linear flexible aluminum venting liners should be professionally inspected periodically for corrosion and damage and replaced when necessary. If the installation does not allow for future inspection or replacement of the flexible aluminum liners, then stainless steel vent liners should be used.

NOTE

This appliance must be completely framed and maintain clearances to combustibles as shown in this manual.

Standoffs are required to maintain clearances to combustible for the part of the appliance outside a non-combustible cavity.

Co-Linear Vent Installations

Co-linear portion of vent system may only be installed within a solid-fuel burning fireplace and chimney.
The appliance must not be connected to a chimney flue serving a separate solid-fuel burning appliance.

Requires co-axial to co-linear adapter, two lengths of 2-ply flexible 3-inch diameter chimney liner, both approved for venting gas appliances.

The required fireplace dimensions and clearances are shown in *Dimensions and Location* and *Clearances to Combustible Materials* sections of this manual (page 10 and 13 respectively).

Fit the liners to the co-linear adapter paying attention to inlet and exhaust as well as the minimum liner bend radius.

Rules for Co-Linear Venting

- Min 10', max 40' vertical pipe
- Max offset 8' with liners at minimum 45° from horizontal plane
- Restrictor: Use restrictor position listed in vent chart on page 23.

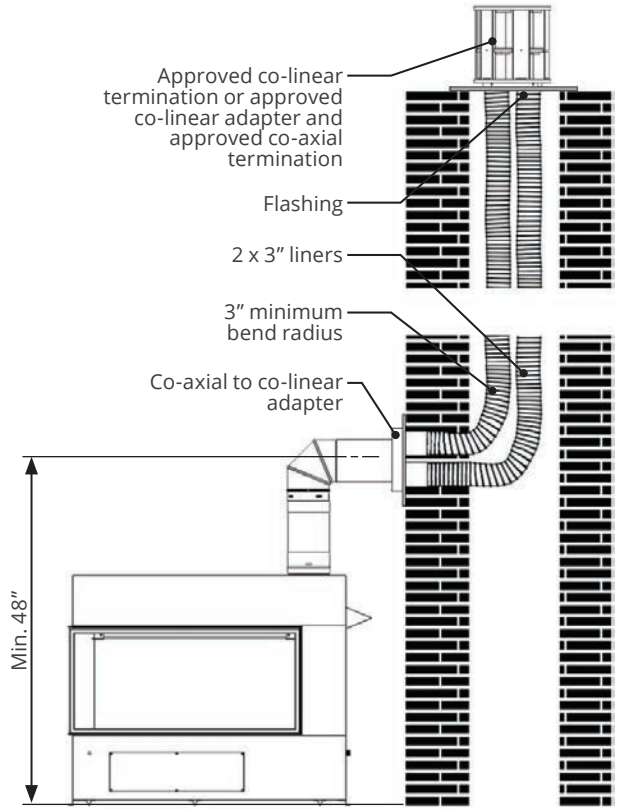

Co-Axial to Co-Linear Adapters

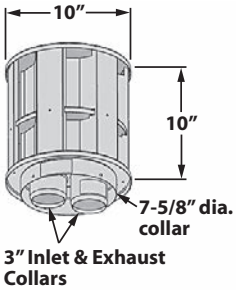

Co-Linear Terminal

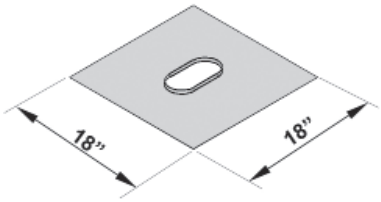

Flashing Kit

Alternate Co-Linear to Co-Axial Conversion

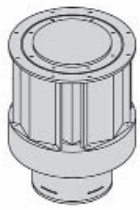

Terminal Cap

With...

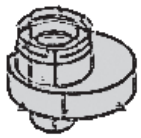

Co-Linear to Co-Axial Adapter

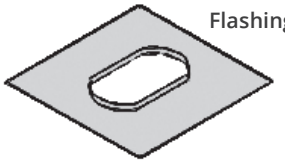

Flashing

Unpacking the Fireplace

Caution

Beware of sharp edges! Wear gloves!

1. Remove packaging from appliance and recycle.
2. Unpack any loose items from around the appliance.
3. **Verify that you have all the components required for the installation, including:**
   - approved non combustible cement board;
   - liners and fuel bed (in separate cartons);
   - chosen LDK HeatShift components;
   - venting components and accessories;

Remove the Windows

Note: most operations involved in setting up the fireplace are performed from the control panel side pictured in step 2 below. You may only need to remove the window on that side when first setting up the fireplace.

1. Remove the Hot Glass Warning plate.

2. Locate the window retainer hooks.

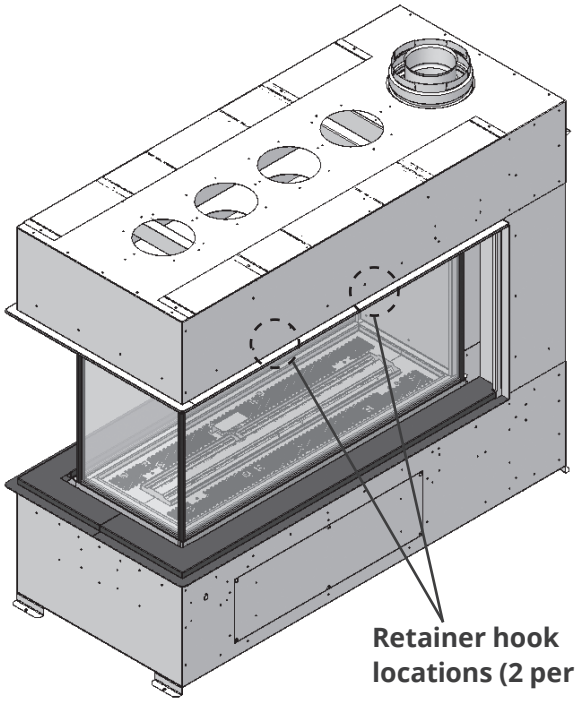

3. Hook the window handle to one of the spring loaded window levers.

4. Pull the window retainer hooks out and up from the railing at the top of the side windows.

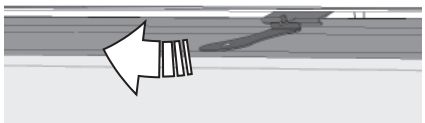

5. Pull the top of the window out and up into the gap between the firebox and outside of the fireplace. (Note the plates have been removed from this image for clarity, but you do not need to remove them to pull the window out).

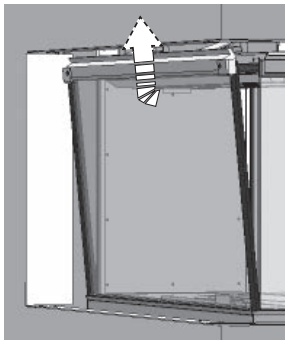

6. Pull the bottom edge out and down.
7. Repeat steps 4-6 for the other side window (if needed).

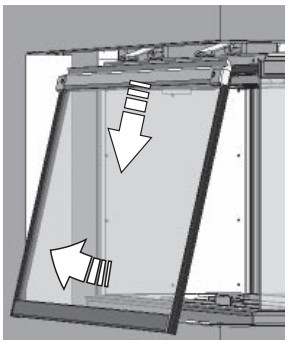

Installing Carrying Handles

The fireplace ships with two carrying handles attached to the shipping pallet - they must be properly attached to the fireplace for lifting the unit.

1. Locate the handles. They are screwed onto the shipping pallet.

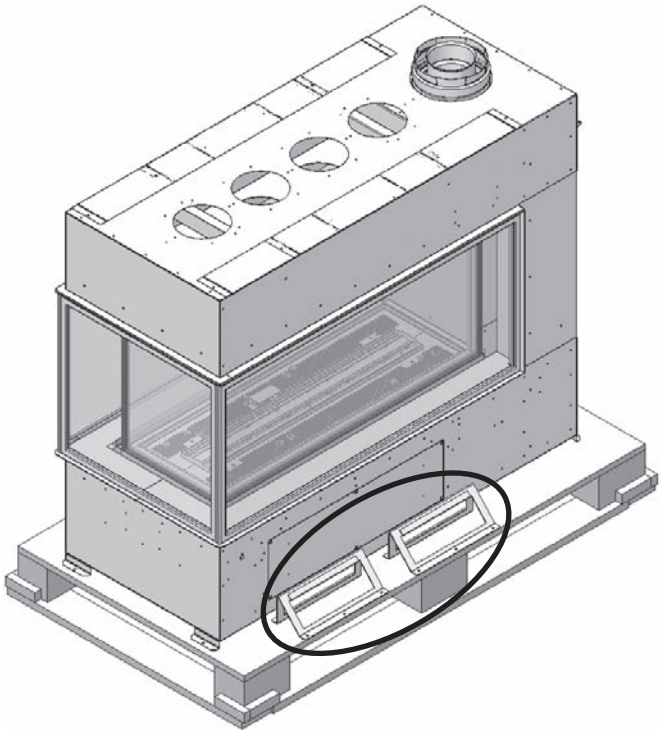

2. A plastic bag with screws for installation is attached to one of the handles. Remove handles and the bag, and save the screws.
3. Fasten handle on the wall end with six screws.

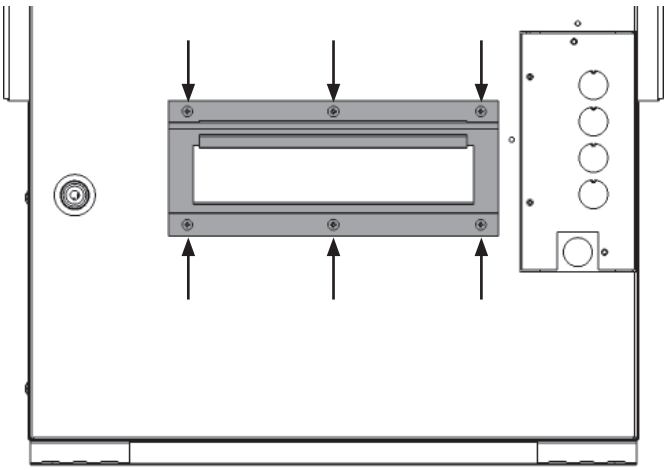

4. On the other end of the unit, fasten the other handle on with six screws.

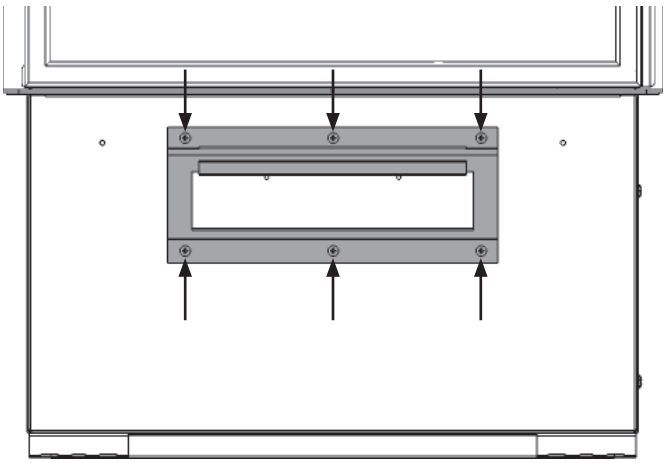

5. With the handles installed, the fireplace is now ready to lift. Unscrew the fireplace feet from the pallet.

The handles may be removed and discarded when the unit is placed in its final location and ready for installation.

Caution

Do not lift the unit without using the carrying handles.

Install Top Standoffs

If installing using combustible framing, the included standoffs on top of the unit must be set up. When shipped, the standoffs are installed laying flat against the unit and screwed in at one end.

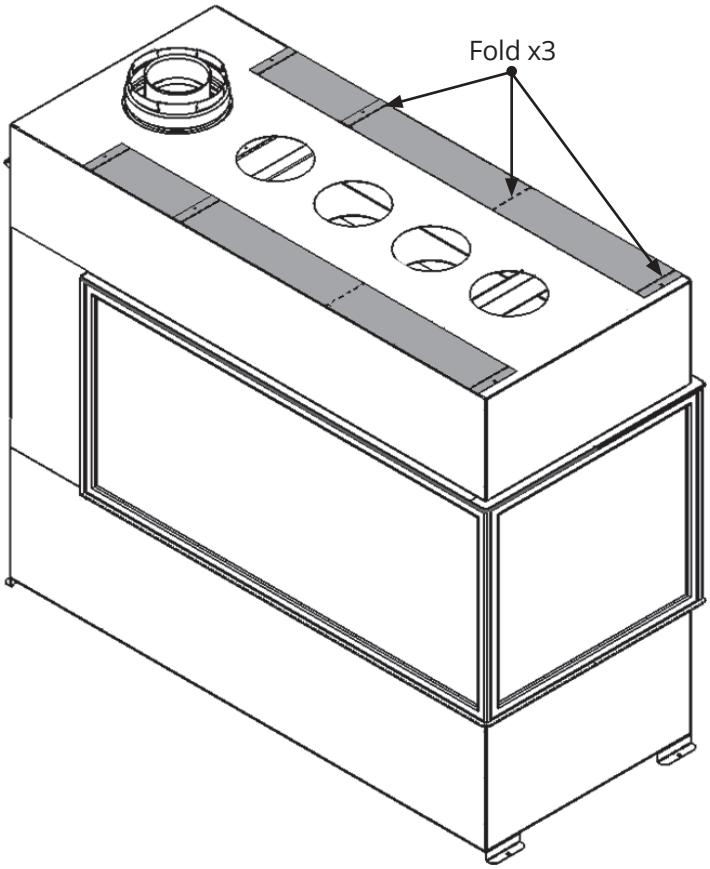

Each standoff has three perforated lines on it. Fold along the perforations to create a triangular shape.

Once all four standoffs are folded up, screw each one down at its remaining connection point.

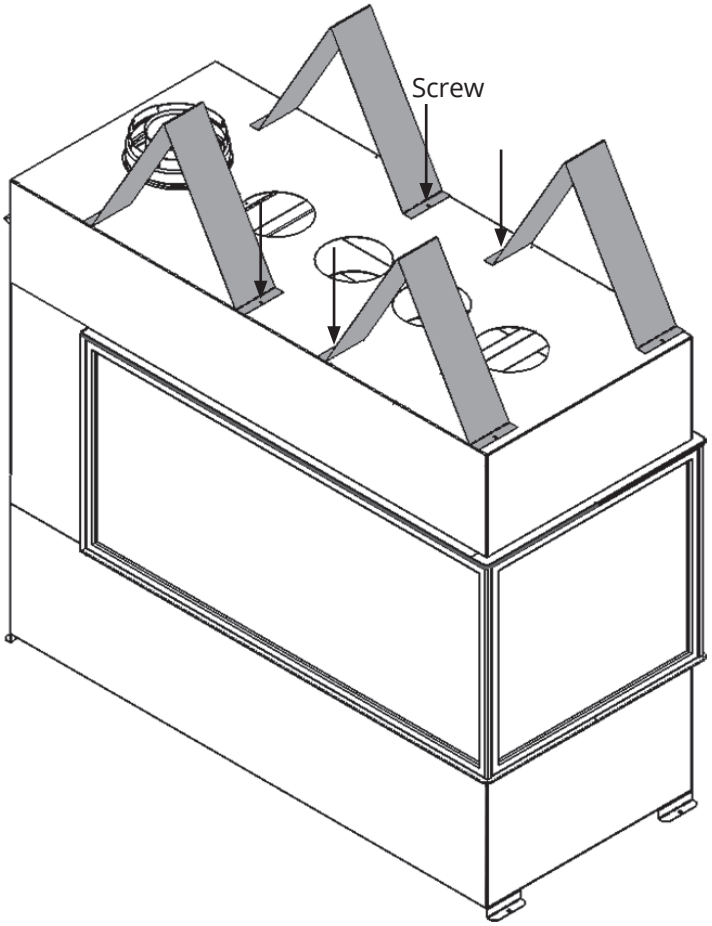

Combustible framing above the fireplace may not be used below the top of the installed standoffs.

If installing the Steel Framing Kit, you may simply unscrew and discard the standoffs.

Installing Electrical Wiring

This section provides information to install the electric wiring required for use with your fireplace's lighting and other options.

⚠ WARNING

All electrical installations must be performed by a qualified electrician and must be electrically wired and grounded in accordance with local codes, or, in the absence of local codes, with the National Electrical Code, ANSI/NFPA 70 or the Canadian Electrical Code, CSA C22.1.

⚠ WARNING

NO ELECTRICAL CONNECTION ALLOWED for any outdoor installation!

Electrical Requirements

120 V, 60 Hz, grounded supply, less than 1 amp.

General Requirements

The included V-Module power supply includes a three-prong grounded plug to plug into a grounded receptacle, also included with the fireplace. The receptacle needs to be wired up within the fireplace enclosure by a qualified electrician.

Installation

1. Locate the electric box at the wall end of the fireplace.

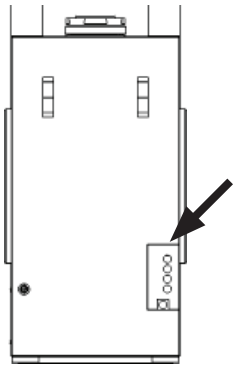

2. Remove the cover (4 screws).

3. Open the cover and pull out the 3 wires and terminal blocks attached to the receptacle inside the box.

4. Punch out the cover knockout you want to pass the supply wiring through.

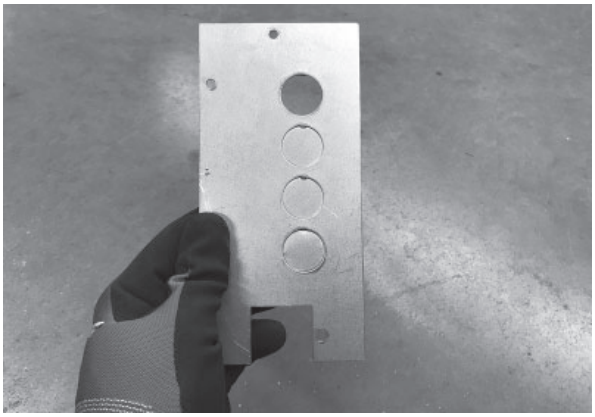

5. Install strain relief (not supplied) and pass supply wiring through. Do not tighten strain relief yet.

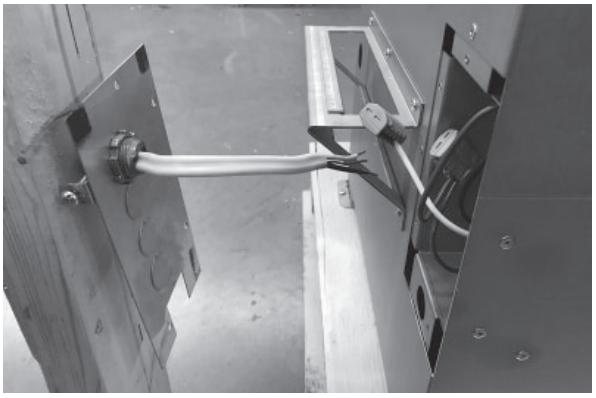

6. Connect like wires using supplied terminal blocks.

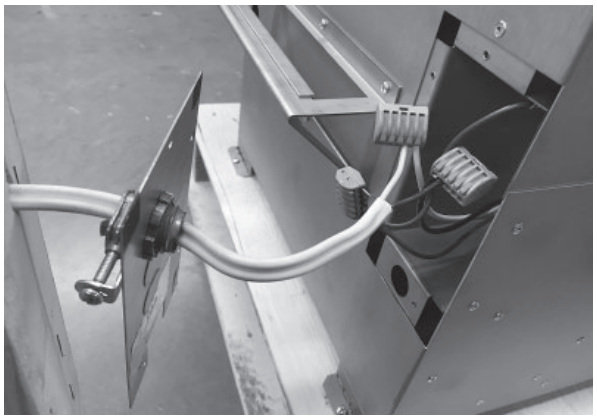

7. Screw the cover plate back onto the fireplace, and tighten the strain relief.

8. The plug-in outlet within the firebox is now ready to provide power to the V-module (already plugged in).

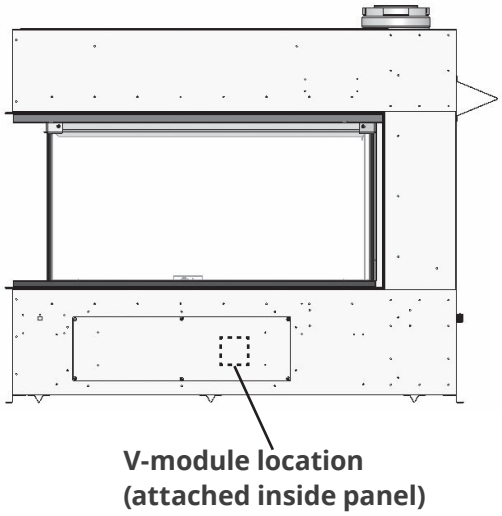

Accessing Junction Box After Finishing

To access the electrical junction box after wall finishing is complete and the fireplace is operational, you must remove the bottom plate.

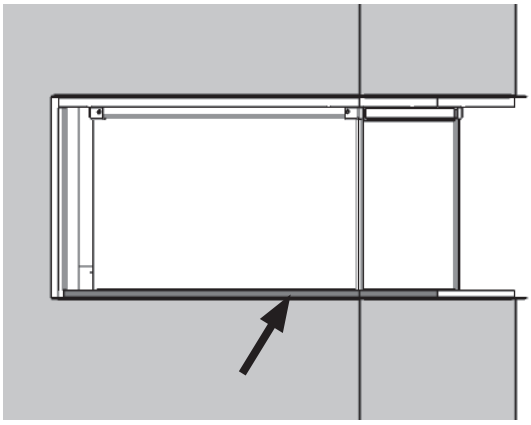

This will give you partial access to the front of the junction box (enough to plug in), but it will be partly obscured by the vertical plate.

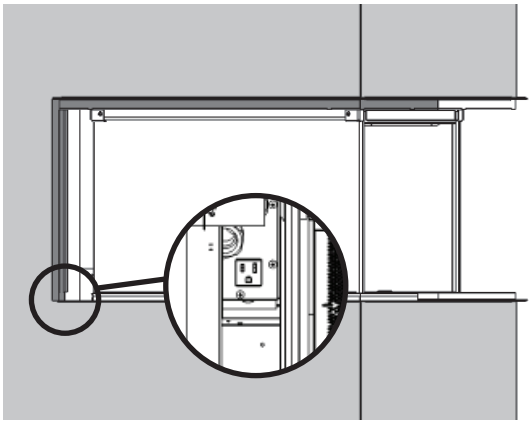

To gain complete access, also remove the top plate (3 screws) and vertical plate (2 screws).

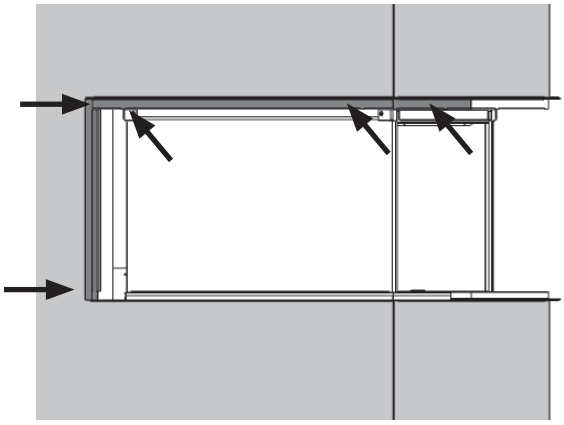

Connecting Gas Supply

The gas supply inlet connection is a 1/2" NPT male connector located on the wall end of the firebox.

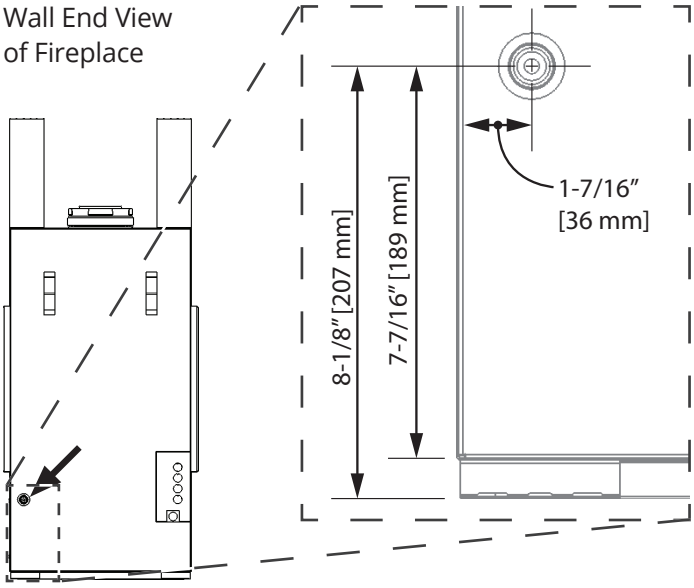

The unit is supplied with a stainless steel flex line to allow the appliance to be disconnected for service. An individual shut-off valve is supplied within the unit on the supply line.

Use only new black iron or steel pipes or copper tubing or CSST if acceptable—check local codes. Note that in USA, copper tubing must be internally tinned for protection against sulfur compounds.

Unions in gas lines should be of ground joint type.

The gas supply line must be sized and installed to provide a supply of gas sufficient to meet the maximum demand of the appliance without undue loss of pressure.

Sealant used must be resistant to the action of all gas constituents including LP gas. Sealant should be applied lightly to male threads to ensure excess sealant does not enter gas lines.

Locating Gas Valve

Once connected, gas may be isolated within the unit using its built-in valve.

The valve is located as shown below. It is easiest to access by removing the bottom plate (magnetic) on this side.

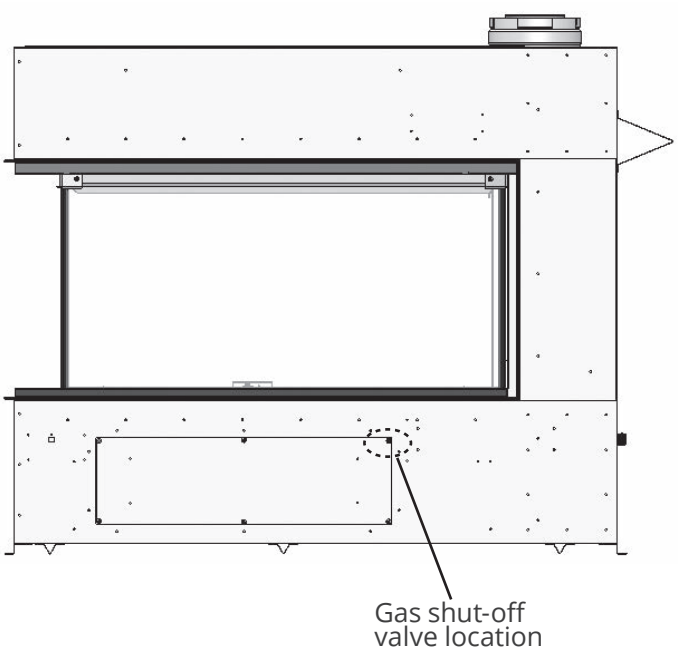

Pressure Test the Supply Line for Leaks

The appliance and its individual shut-off valve must be disconnected from the gas supply piping system during any pressure testing of that system at test pressures in excess of 1/2 psig (3.5 kPa).

The appliance must be isolated from the gas supply piping system by closing its individual manual shut-off valve during any pressure testing of the gas supply piping system at test pressures equal to or less than 1/2 psig (3.5 kPa).

Failure to either disconnect or isolate the appliance during pressure testing may result in regulator or valve damages and void the warranty. Consult your dealer in case of damages.

⚠ WARNING

Never use an open flame to check for leaks. Correct any leak detedted immediately.

Pressure Test Points

The minimum supply pressure is given in the *Specifications* section of this manual, see page 6.

All piping and connections must be tested for leaks after installation or servicing. All leaks must be corrected immediately.

When testing for leaks:

- Make sure that the appliance is turned off.
- Open the manual shut-off valve.
- Test for leaks by applying a liquid detergent or soap solution to all joints. Bubbles forming indicate a gas leak.

The pressure test tapping locations are shown in the figure below. An internal regulator within the valve controls the burner manifold pressure.

The correct pressure range is shown in the table in section *Specifications* of this manual on page 6. The pressure check should be made with the burner alight and at its highest setting. See *Lighting Instructions* in Appendix A at the end of this manual for full operating details.

Top View

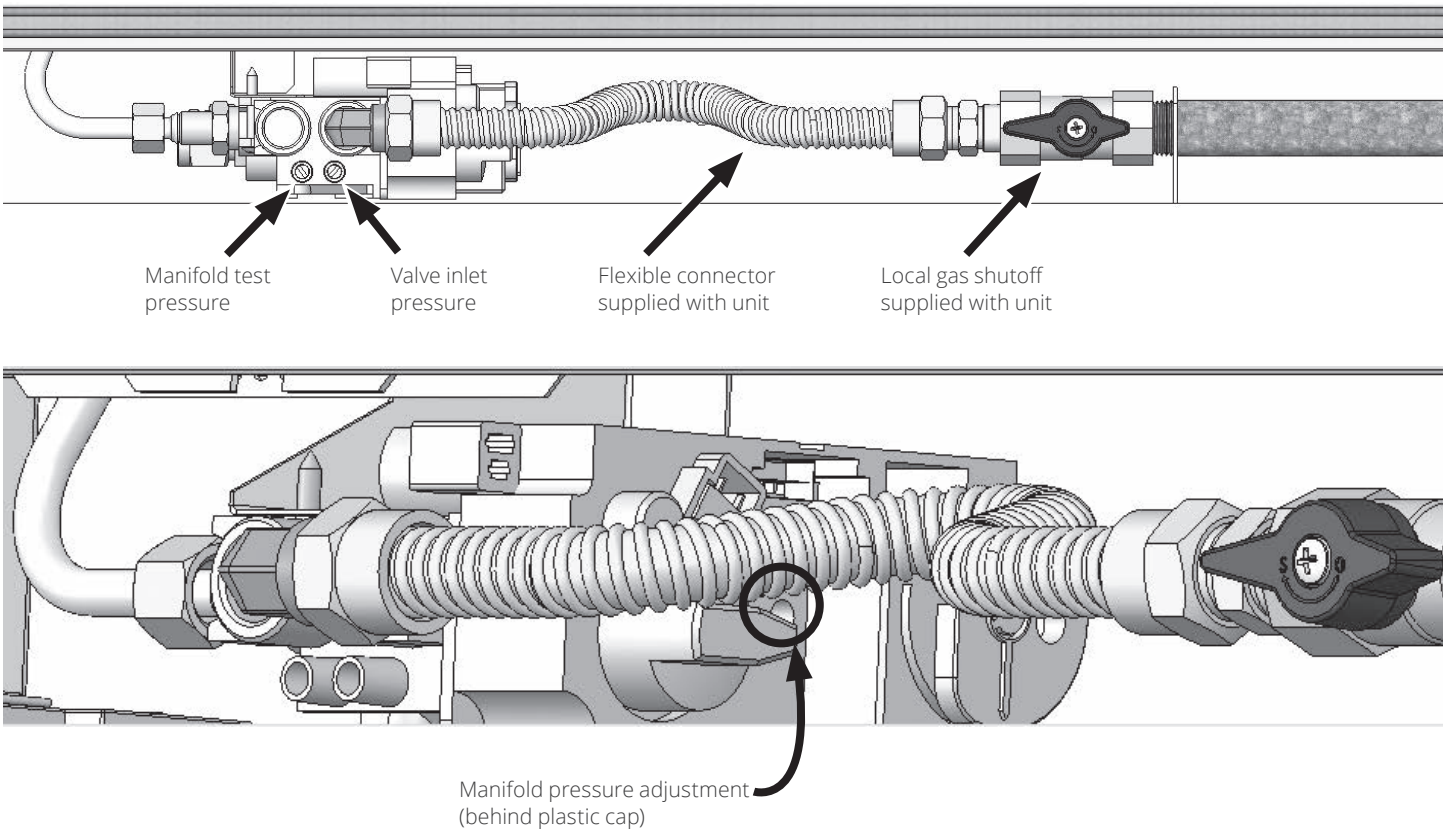

Installing Wall Switch Kit

A remote battery wall switch kit is provided with this appliance. It is connected to the receiver in the fireplace. The receiver is located under the bottom plate.

1. Decide where the switch is to be installed in the wall. Do not locate the switch within the non-combustible zone above the fireplace.
2. Thread the harness through the access hole in the appliance, located below the electrical junction box. DO NOT run the wire over top of the appliance.

Caution

Do not run the switch wire over the top of the firebox. Route the wire so it does not contact the firebox.

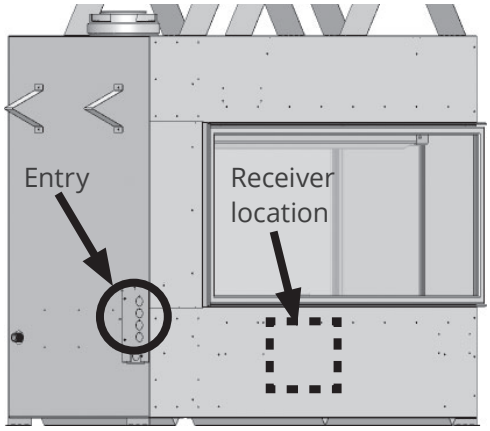

3. Pull out the receiver. You can remove the ignition wire to improve access.
4. Take the signal wire and plug it into the receiver's connection slot as indicated (the other slot should already be fitted with the valve's wire harness connector)!

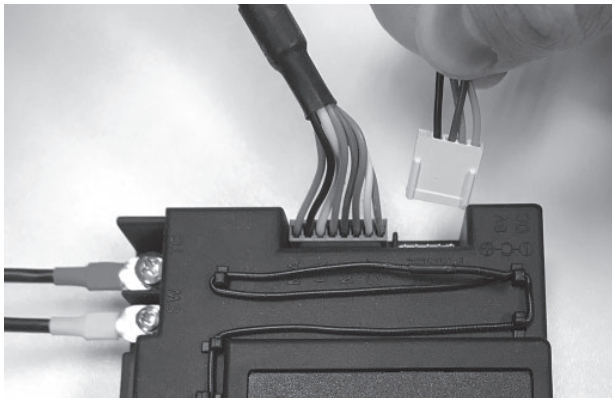

IMPORTANT: The connection can only be done one way.

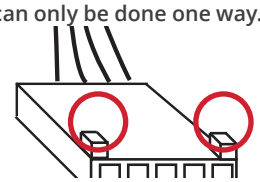

Do not force it or damage the pins on the receiver box!

5. Connect the 6 volt power wire to the receiver.

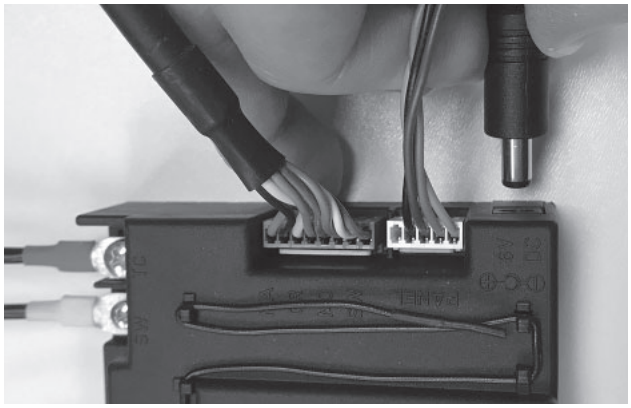

6. On the outside of the fireplace, run the harness to the junction box location. Use insulated type staples to secure the wiring to framing.
7. Feed the harness assembly through a restraint on the rear of the junction box, feeding through until the harness sheath is pinched by the retainer. Ensure there is sufficient wire length inside the junction box to make connection to the switch plate and battery holder.

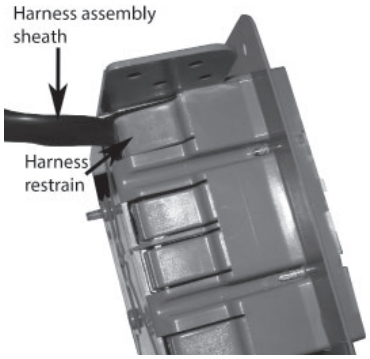

8. Secure the junction box to the mounting surface using appropriate fasteners (not supplied).

Caution

Do not put batteries in the receiver as leaking acid could damage its circuit board.

9. Plug the signal wire into the switch plate.

10. Mount the switch plate to the junction box with 2 screws provided. Note: Place the switch left or right to suit the homeowner's wishes.

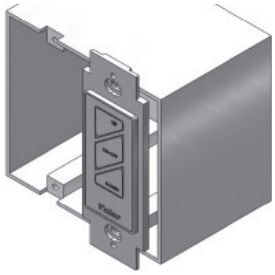

11. Locate and secure the magnet plates using 2 long screws provided.

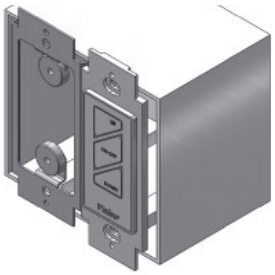

12. Place and secure the cover plate to the box using 4 screws provided.

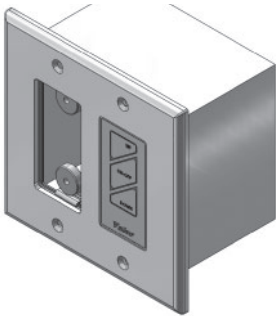

13. Feed the cable tie through the 2 side slots of the battery cover assembly.
14. Position the battery holder to the rear face and secure together with a cable tie. Note that clearance is required for power wire connection.

15. Insert 4 AA **alkaline** batteries in the battery holder.
16. Connect the power wire to the battery holder.
17. Insert battery assembly into the junction box.
18. Reconnect the ignition wire to the receiver if it was previously removed.
19. Test the operation of the wall switch—see *Appendix C - Wall Switch Operation* on page 63.
20. Replace the receiver in its position and as well as the antenna if deployed.

Caution

DO NOT PUT BATTERIES IN THE BATTERY HOLDER until the wires are connected to the burner control unit as short-circuit could result in the destruction of the electrical components.

DO NOT USE a screwdriver or other metallic object to remove the batteries from the battery holder or the handset! This could cause a short circuit to the receiver.

Do not run the switch wire over the top of the firebox. Route the wire so it does not contact the firebox.

To avoid short-circuit to the receiver, position the antenna so that it DOES NOT TOUCH the ignition wire.

Ceramic Liner

The ceramic Fluted Black (2200FBP) liner kit installs as follows:

1. Loosen (but do not remove) the screw next to the panel retaining bracket in the roof of the fireplace, and slide the bracket away from the wall.

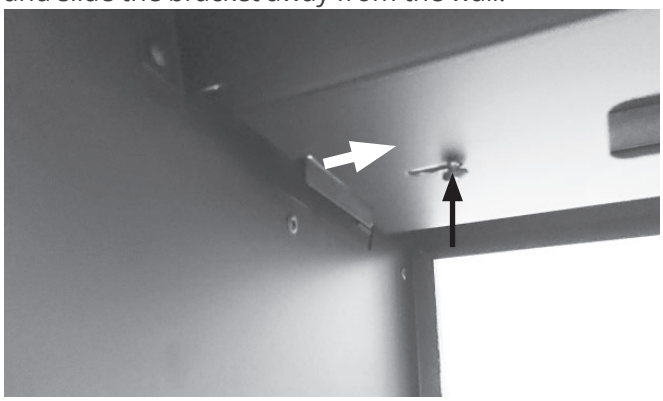

2. Insert the top of the liner (the thinner end) in the gap between the wall and the retaining bracket.

3. Swing the bottom of the liner toward the wall until flat.

4. Slide the retaining bracket against the liner and tighten the screw.

5. Slide the bottom clip down onto the metal edge at the bottom of the liner.

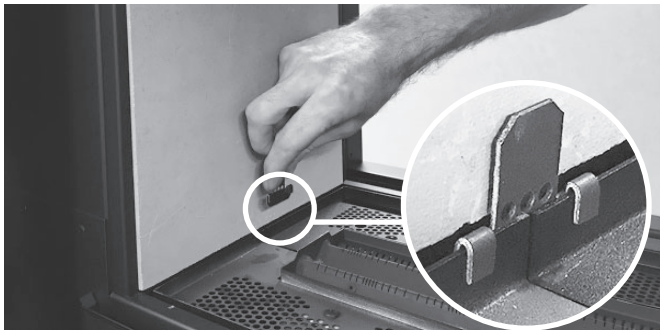

⚠ Liners are fragile, **never force one into place.**

Glass Liner

The 2100RGP Reflective Glass liner is installed differently than the ceramic liner.

1. Loosen (but do not remove) the screw next to the panel retaining bracket in the roof of the fireplace, and slide the bracket away from the wall.

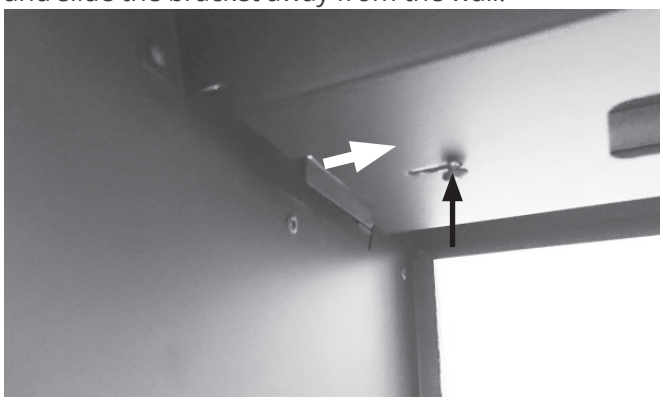

2. Slide the liner in from either side, between the wall and the light rail and retaining bracket.

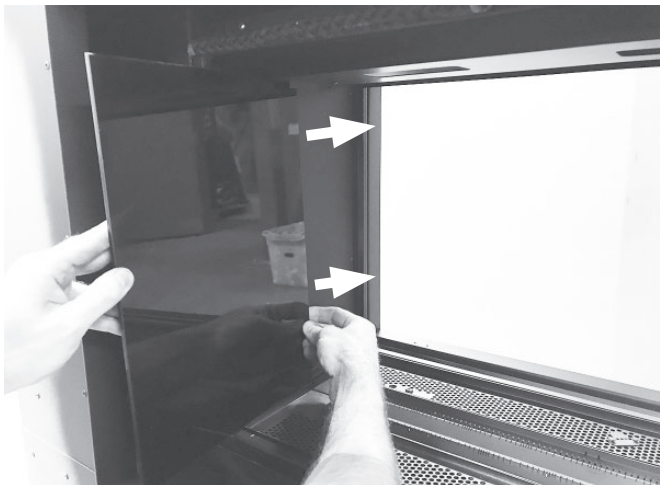

3. Slide the retaining bracket against the liner and tighten the screw.

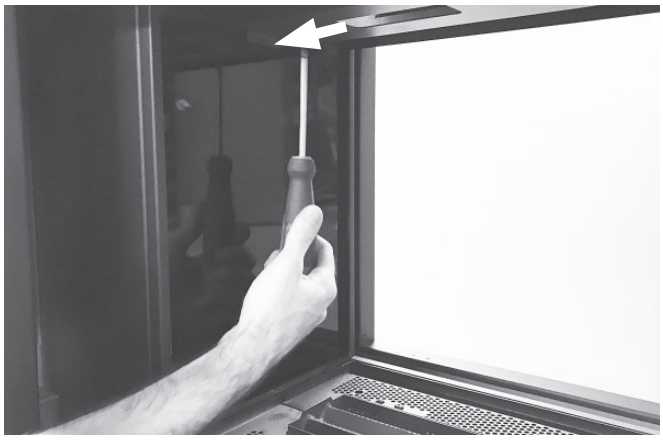

4. Fold the bottom clip along its perforation into a right angle, as shown.

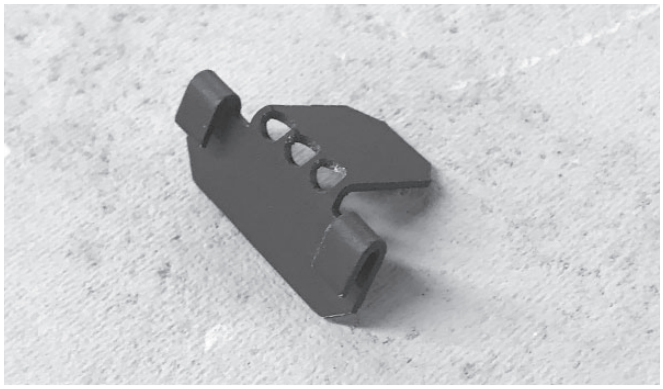

5. Slide the bottom clip down onto the metal edge at the bottom of the liner.

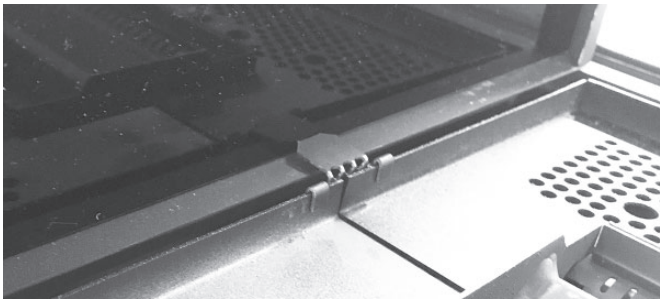

Liners are fragile, **never force one into place.**

If you have difficulty inserting the liner from one side, remove the opposite window and install from the other side.

Birch Log Kit 2100BLK

Material required

- Birch Log Kit, which contains:
  - 7 logs
  - 2 supports
  - 1 bag of embers (not pictured)
  - 1 bag of splinters (not pictured)
- Gloves, if desired

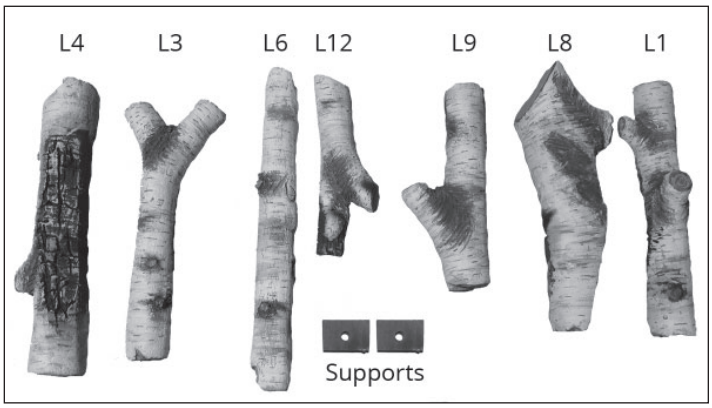

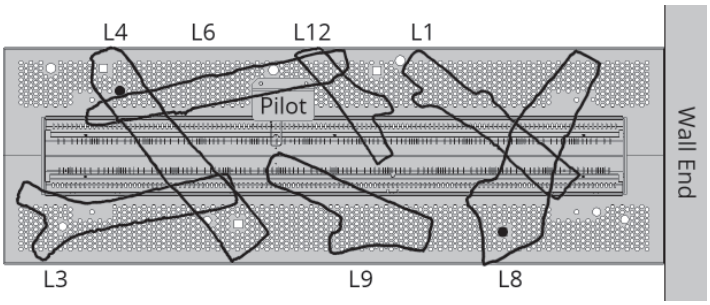

Log placement on media tray and burner. Black dots indicate holes for support placement.

Installation

Carefully unpack the kit. Note the logs have numbers pressed into their undersides. Install the logs as follows.

1. Place 2 supports over the holes indicated by the two black dots in the diagram above.

2. Place log L4 on top of the left hand support, and

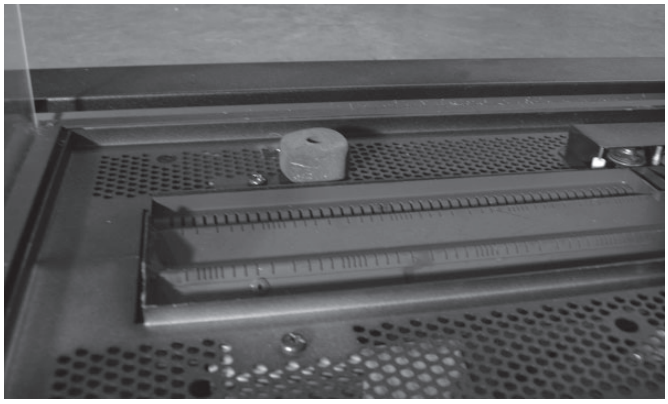

position log across the media tray.

3. Place log L8 on top of the right hand support, and position log across the media tray.

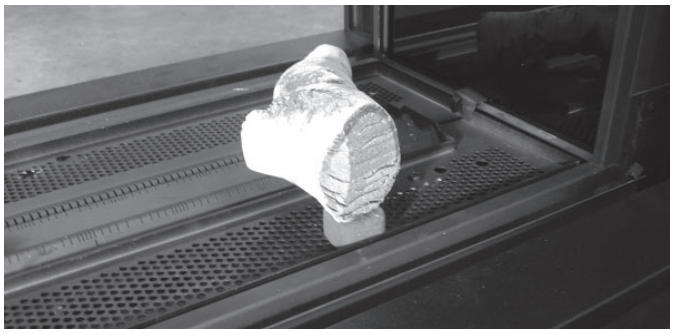

4. Place log L3 across log L4 as shown.

5. Place log L6 across log L4 as shown.

6. Place log L12 across log L6 as shown.

7. Place log L1 across log L8 as shown.

8. Place log L9 in the open space between logs L8 and L4 as shown.

IMPORTANT: Approved for use only with the ceramic embers and splinters provided with your Valor fireplace The use of any other products may void your fireplace warranty.

9. Place embers by hand onto the burner and media tray (avoid pouring as this can deposit fine dust in the burner ports). You may not need to use all the embers supplied. Be careful not to block any burner ports.

10. Be sure to keep the pilot light safe zone clear of all embers. This allows for proper ignition of the fireplace.

11. Place splinters by hand into the burner and media tray. You may not need to use all the splinters supplied. The completed arrangement will look like the one shown below.

- Note some minor adjustments may be needed to improve flame picture.

WARNING

CHOKING HAZARD! Ensure that the fireplace area is clear of ember and splinter particles as these could be ingested by small children. Vacuum area after installation.

Installation

Driftwood Kit 2100DWK

Material required

- Driftwood Log Kit, which contains:
  - 5 logs
  - 7 pebbles
  - 1 x 5.5 cup bag of vermiculite (not pictured)
- Gloves, if desired

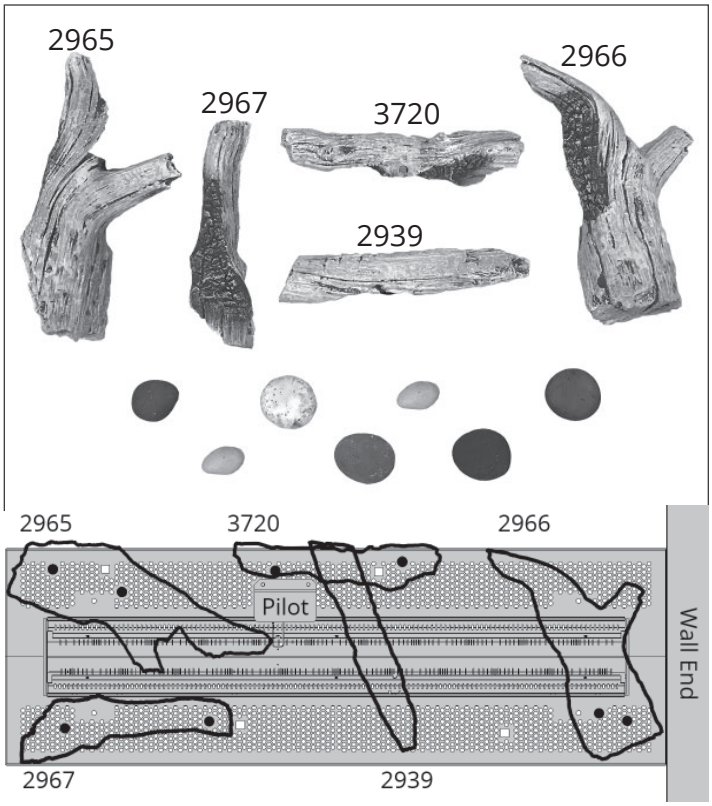

Log placement on media tray and burner. Black dots indicate holes for pin placement.

Installation

Carefully unpack the kit. Note some logs have pins and holes to help you place them on the burner platform, or other logs.

Install the kit as follows.

1. Place the vermiculite onto the burner by hand (avoid pouring as this can deposit fine dust in the burner ports). Be careful not to overfill and block any burner ports. (You should hold back at least half of the bag)

2. Do not place more than a couple of pieces of vermiculite in the pilot light's safe zone.

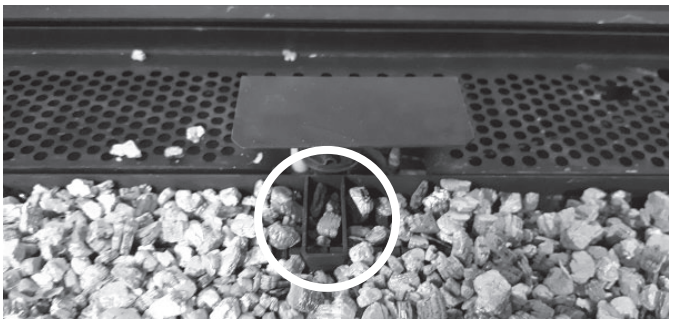

3. Place log 2966 using the two pinholes indicated.

4. Place log 3720 into the two pinholes behind the pilot light. Note this leaves a pin pointing straight up.

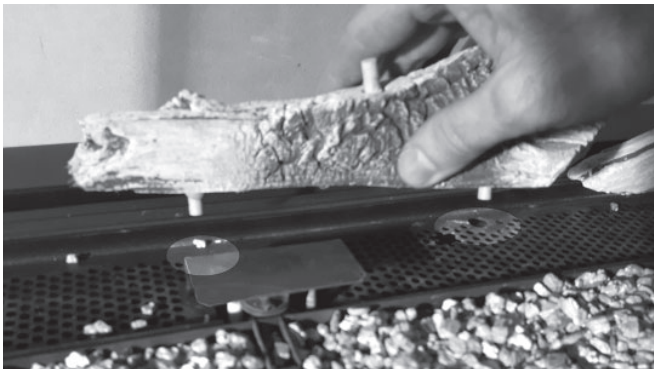

5. Place log 2965 into the two pinholes shown.

6. Place log 2967 into the two pinholes shown.

⚠ WARNING

CHOKING HAZARD! Ensure that the fireplace area is clear of vermiculite particles as these could be ingested by small children. Vacuum area after installation.

7. Place log 2939 onto the pin on log 3720. Leave the other end of log 2939 across the media tray.

8. The arrangement should now look like this.

9. Add the remaining vermiculite around the media tray. You may not need to use the entire bag.

10. Place the pebbles around the media tray and burner to your taste. Place a maximum of 2 pebbles on the burner, the rest around the media tray. The completed arrangement will look like the one below.

- Note some minor adjustments may be needed to improve flame picture.

IMPORTANT: Approved for use only with the vermiculite provided with your Valor fireplace The use of any other products may void your fireplace warranty.

Installation

Rock and Shale Set 2100RSS

Material required

- Rock and Shale Set, which contains:
  - 4 logs
  - 24 rocks
  - 2 bags of light and dark embers (not pictured)

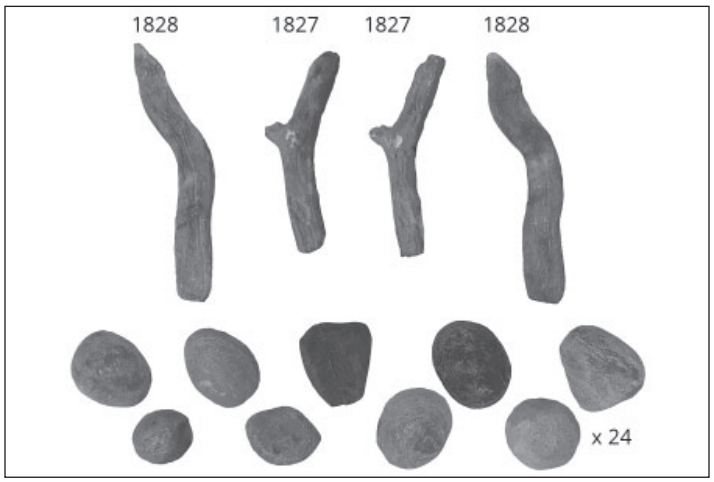

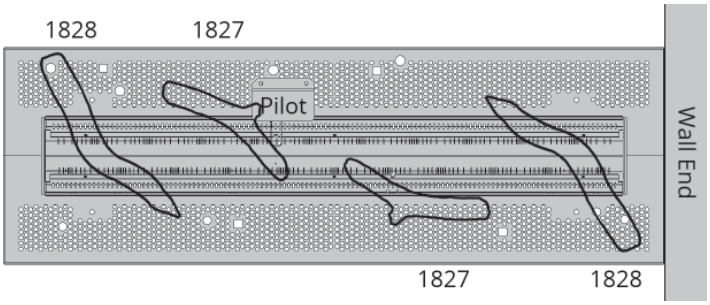

- Gloves, if desired

Installation

Carefully unpack the kit. Install the set as follows.

1. Mix together the 2 bags of light and dark embers.
2. Place the mixed embers by hand onto the burner (avoid pouring as this can deposit fine dust in the burner ports). Be careful not to completely block any burner ports. You may not need to use the entire ember mix.

3. Ensure the pilot light safe zone is not blocked by embers. This is important to ensure proper ignition.

4. Select three rocks that will stand on a narrow edge, and place them, one at each end of the burner, and one behind the pilot hood.

5. Place the remaining rocks around the edge of the burner.

6. Place the left hand logs (1 each of 1828 and 1827) as pictured. Both should be arranged to arch over the embers as much as possible instead of resting directly on them.

7. Repeat on the right hand side of the fireplace.

8. The completed arrangement will look like the one below.

- Note some minor adjustments may be needed to improve flame picture.

WARNING

CHOKING HAZARD! Ensure that the fireplace area is clear of shale pieces as these could be ingested by small children. Vacuum area after installation.

IMPORTANT: Approved for use only with the ceramic rocks, twigs and shale provided with your Valor fireplace The use of any other products may void your fireplace warranty.

Glass Murano Set 2100DGM

Material required

- Decorative Glass Murano Set, which contains:
  - 2 Murano glass covers
  - 8 x 1/4" ceramic pads (not pictured)
  - 1 bag 1/2" clear fireglass (not pictured)
- Gloves, if desired

Installation

Carefully unpack the kit. Install the set as follows.

1. Arrange the 1/4" ceramic pads evenly on the media tray, surrounding the burner.

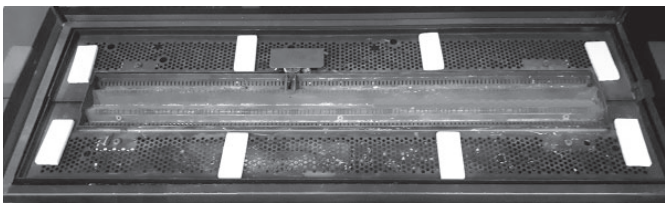

2. Place glass covers 6857 and 6858 onto the ceramic pads as shown. Note the cutout in 6857 that fits around the pilot light.

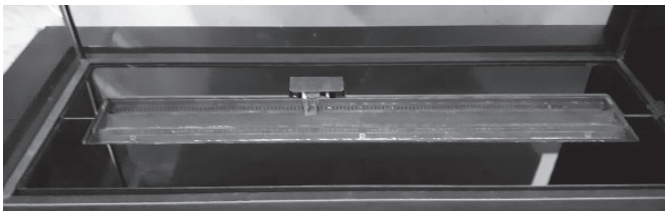

3. Place fireglass onto the burner by hand. You may not need to use the entire bag.

4. Ensure the pilot safe zone is clear of fireglass. This ensures proper ignition.

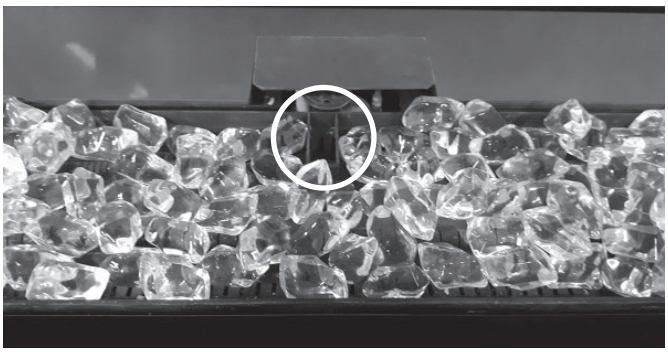

5. The completed arrangement will look like the one below.

- Note some minor adjustments may be needed to improve flame picture.

⚠ WARNING

CHOKING HAZARD! Ensure that the fireplace area is clear of fireglass particles as these could be ingested by small children. Vacuum area after installation.

IMPORTANT: Approved for use only with the fireglass provided with your Valor fireplace The use of any other fireglass products may void your fireplace warranty.

Remote Control - Radio Frequency

918.0 MHz for USA and Canada.

This device complies with Part 15 of the FCC Rules and with Industry Canada license-exempt RSS standard(s). Operation is subject to the following two conditions:

(1) this device may not cause harmful interference, and

(2) this device must accept any interference received, including interference that may cause undesired operation.

Remote Control Initial Pairing

The receiver and the handset of the remote control system must be initially paired before the first use.

1. Insert two 1.5 V AAA **alkaline** batteries in the handset.
2. Locate the Reset button on the front side of the receiver.
3. With a thin object, press and hold the receiver's RESET button until you hear one short and one long beeps. After the second beep, release the reset button.
4. Within the subsequent 20 seconds, press and hold the ▼ button on the remote handset for 2–3 seconds. COM will be displayed on the handset during the pairing sequence. You will hear two short beeps confirming the pairing is done.
   If you hear one long beep, the pairing sequence has failed or the wiring is incorrect.

This is a one time pairing only and is not required when changing the batteries of the handset or receiver. The remote control system is now ready to use.

See *Appendix B - Remote Control Operation* pages 56–62 for full operating details.

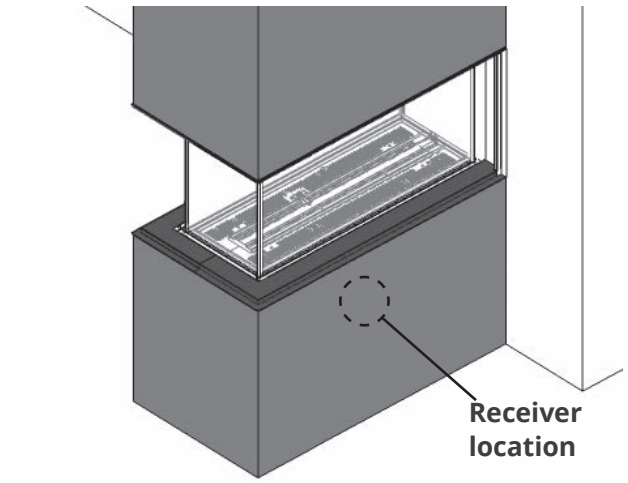

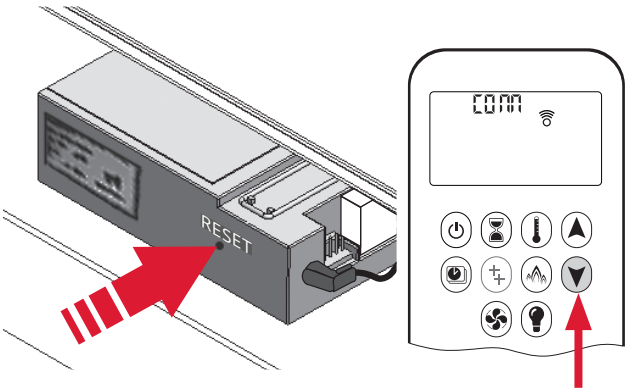

Installing Remote Control Handset Wall Holder

The remote control kit for this fireplace comes complete with a wall-mounted holder. This holder is not required in all installations but is provided as an optional feature for those customers who wish to mount the remote handset to the wall.

To install the holder to the wall, find a convenient location and use the hardware provided with the kit. Cover the screws with the included caps to finish the mounting.

Once mounted, the holder is magnetic - simply place the remote gently into the holder.

IMPORTANT: The location of the remote control handset is important to assure proper temperature regulation. To obtain a constant temperature, we recommend that the handset should be **between 3 and 15 feet away from the appliance but not directly above it**. We also advise that the handset should be located away from any other heat source and not in direct sunlight as this may affect the temperature sensor located in the remote handset.

Decorative Lighting

This appliance is equipped with decorative lighting located above the fuel bed.

Test this overhead lighting before completing installation (see *Appendix B - Remote Control Operation* on page 58). If any of the bulbs are out, replace them using the following steps.

Required Bulbs

The light bulbs in the LX1 are 120V, 20W bi-pin (JC) halogen bulbs GY6.35. A total of 4 are installed in the unit.

Remove Barriers and Windows

Changing the light bulbs requires access to the inner firebox. See *Remove the Windows* on page 28 for details on removing the windows from the fireplace.

> **It is easiest to see and change the light bulbs opposite the window you are opening. You may find it easier to remove both front windows if bulbs on both side of the appliance need changing.**

Change Bulbs

> **Wear gloves when changing these bulbs. Most manufacturers recommend never touching them as oil from your skin can shorten their life.**

1. Gently pull the bulb out of the receptacle in the lighting rail.
2. Replace with a new bulb. Be careful to align pins with the receptacle holes.
3. Test the lighting with the remote control handset before replacing windows (lighting can operate independent of main fire being on or off).
4. Reinstall windows following steps next page.

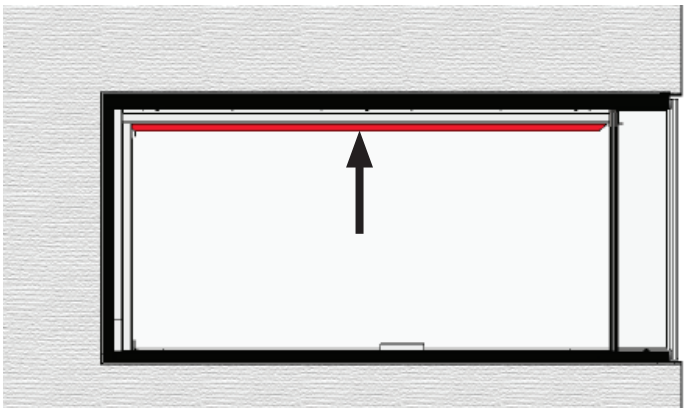

Lighting rail on both sides, just behind window

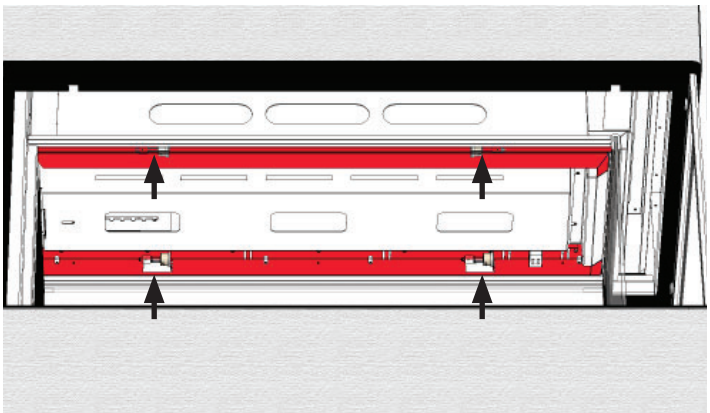

Light bulbs location, 2 per side
Looking up at the roof of the firebox

Window Re-installation

1. Remove any fuel bed media from the window bottom rail before installing the window.
2. Ensure the braided gasket is well fitted to the bottom of the window.
3. Insert the window behind the appliance's front panel, making sure the angled rail at the top is facing out.
4. Lower the bottom of the window into the bottom rail.

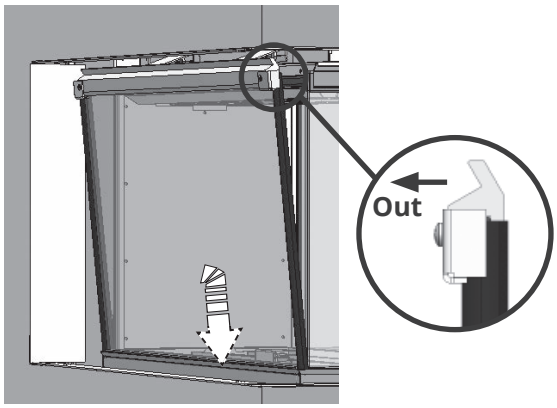

5. Push the top of the window pane against the firebox. Ensure it is centered on the firebox so it seals properly against the end window.

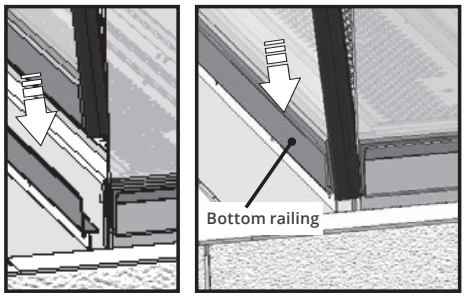

6. Pull one retainer hook over the angled rail at the top of the window, and hook it down completely. Repeat on the other side. Make sure the hooks latch completely to the rail.

Correct

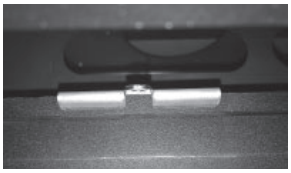

Incorrect

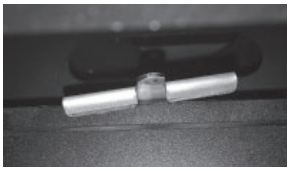

7. Repeat steps 1 to 6 for the other side window.
8. Pull the top of each window to ensure it the spring mechanisms are working well and pull the window back into position.
9. Apply firm hand pressure around the window panes (particularly on the top and sides). ENSURE THE FRONT WINDOWS SILICONE GASKETS ARE WELL SEALED, FROM TOP TO BOTTOM, TO THE SIDE WINDOWS!
10. Replace the hot glass warning plate against both side windows, in the bottom rail.

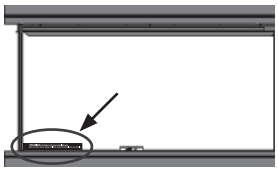

11. When finished, replace barrier screens onto fireplace.

⚠ WARNING

The window units must be correctly installed, fastened and sealed after servicing. If not it could result in serious bodily injury and/or damage to the fireplace.

To ensure safe operation:

- **Double-check that the bottom of each window frame is correctly installed in the bottom support railing;**
- **Verify that the retainer hooks are properly fastened to the top angle brackets;**
- **Pull out the top of each side window and release it to ensure the springs return it;**
- **Ensure the window is sealed before operation.**

For safety purposes, make sure the barrier screen is re-installed on the fireplace front after maintenance.

⚠ WARNING

Failure to install the window correctly can:

- **Cause carbon monoxide to leak.**
- **Affect the performance of the fireplace.**
- **Damage components.**
- **Cause overheating resulting in dangerous conditions.**

Damage caused by incorrect window installation is not covered by the Valor Warranty.

Checking Operation

Turn the fireplace flame up and down using the remote control to confirm that the full range of inputs is achieved—see the remote control operation instructions in *Appendix B - Remote Control Operation* on page 56.

Locating Aeration Control

Adjusting Aeration

Light the fire and allow the unit to warm up for 10–15 minutes to evaluate the flame picture. The burner is equipped with an adjustable shutter to control primary aeration. The shutter is factory-set to an aeration gap which will give optimum performance for the vast majority of installations.

Depending of the fuel bed used, altitude and other considerations, the flame picture may be improved by adjusting the aeration. The need for adjustment should be determined only by operating the appliance with the fuel bed, panels and window installed and evaluating the flame picture after a 15-minute warm-up.

Increasing aeration will cause the flames to appear more transparent and blue showing more ceramic effects glow.

Decreasing aeration will cause the flames to appear more yellow or orange showing less ceramic effects glow.

Too little aeration may result in black carbon forming on logs or roof panel and dropping into the firebox. May also result in carbon or soot stains on the vent termination and exterior wall around the termination! The Manufacturer is not responsible for for any damage caused by an air shutter setting with too little aeration.

To access the air shutter, remove the barrier screen and the base plate. The air shutter lever is located in front of the firebox behind the appliance front panel. Adjust the shutter by using a screwdriver as a lever to slide the shutter left or right.

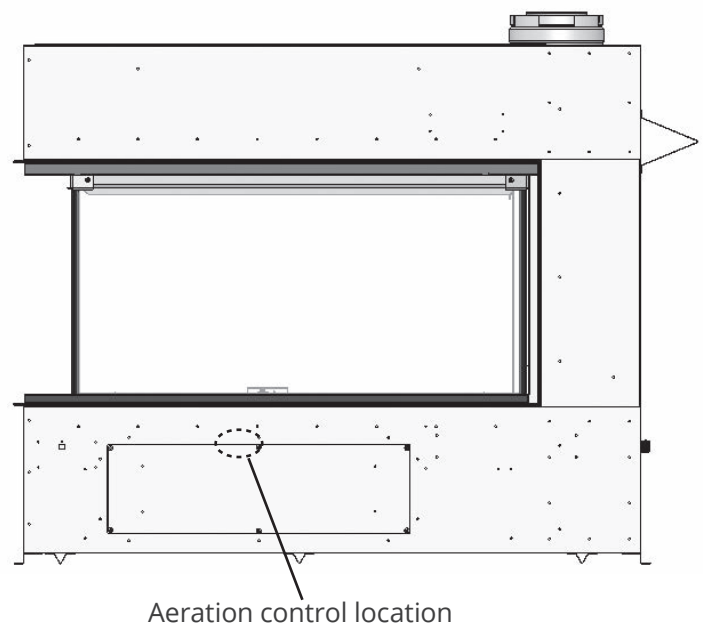

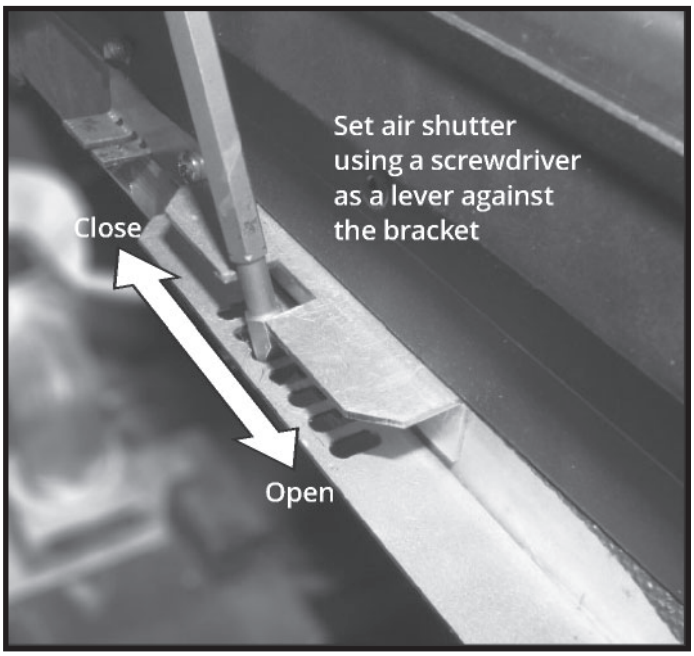

Installing Plates

For safety, install all plates (top and bottom) as supplied with the fireplace if they have been removed.

The top and vertical plates are screwed in place.

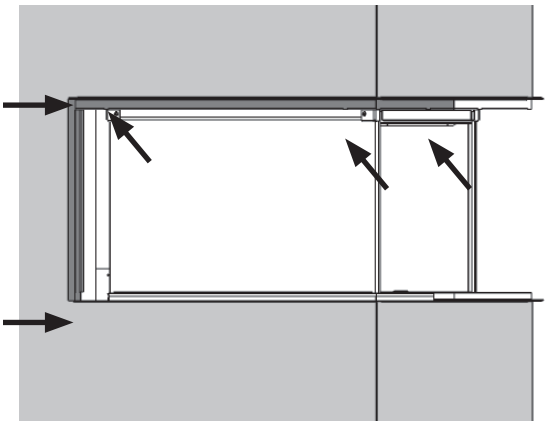

The bottom plates are magnetic and do not require any tools to install. To replace them:

1. Place the plate on the fireplace's front flange.
2. Slide the plate sideways toward the wall end, all the way to the end.

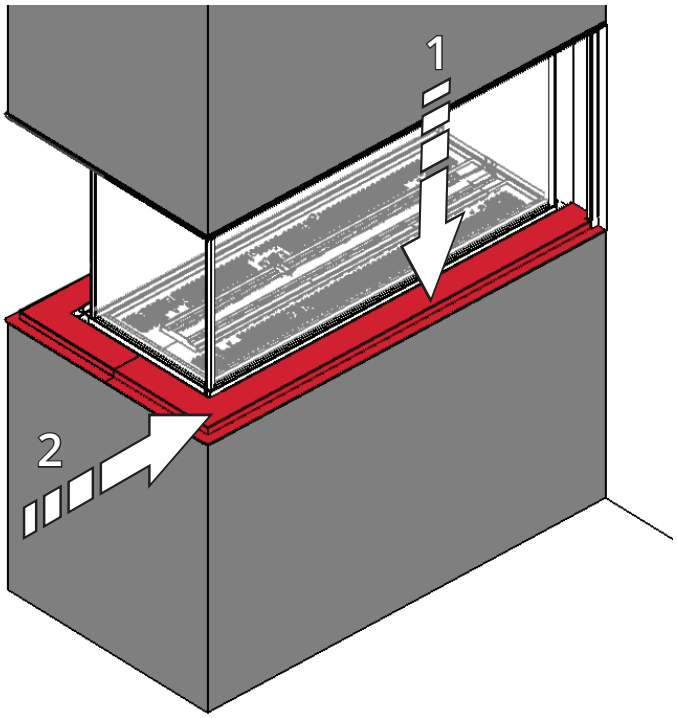

3. Repeat for other side.

Install Barrier Screens

For safety, install all barrier screens as supplied with the fireplace. The screens are magnetic and do not require any tools to install.

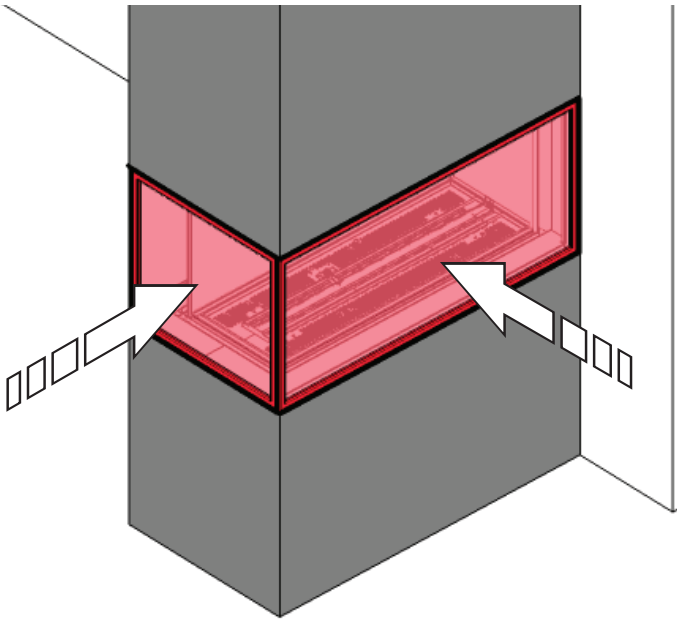

Show the customer how to remove the barrier screens and plates to access the controls, and how to replace them.

Wiring Diagram

GV60 Wiring Diagram

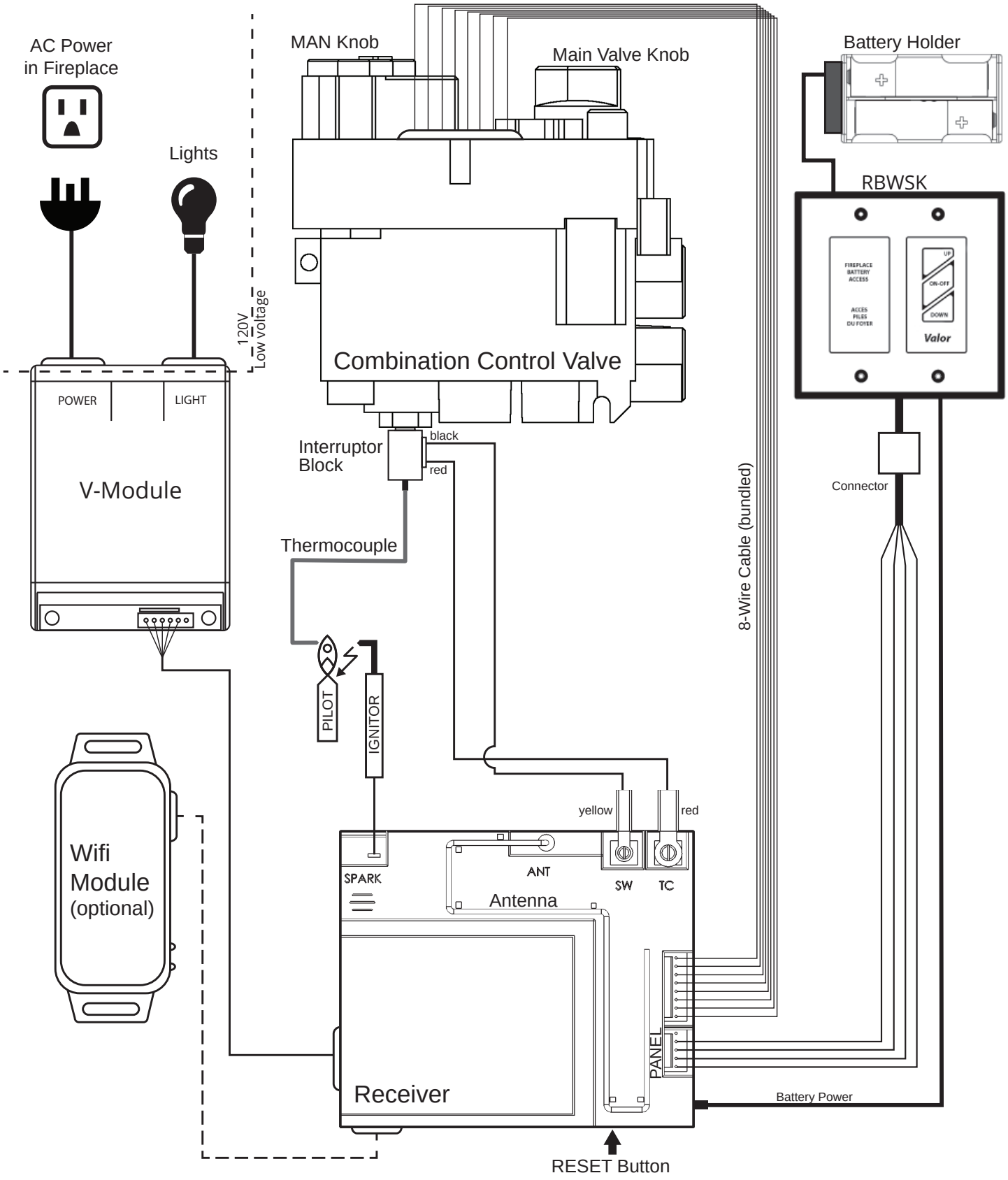

Commonwealth of Massachusetts

State of Massachusetts Carbon Monoxide Detector/Vent Terminal Signage Requirements

For all side wall horizontally vented gas fueled equipment installed in every dwelling, building or structure used in whole or in part for residential purposes, including those owned or operated by the Commonwealth and where the side wall exhaust vent termination is less than seven (7) feet above finished grade in the area of the venting, including but not limited to decks and porches, the following requirements shall be satisfied:

1. INSTALLATION OF CARBON MONOXIDE DETECTORS. At the time of installation of the side wall horizontal vented gas fueled equipment, the installing plumber or gas fitter shall observe that a hard wired carbon monoxide detector with an alarm and battery back-up is installed on the floor level where the gas equipment is to be installed. In addition, the installing plumber or gas fitter shall observe that a battery operated or hard wired carbon monoxide detector with an alarm is installed on each additional level of the dwelling, building or structure served by the side wall horizontal vented gas fueled equipment. It shall be the responsibility of the property owner to secure the services of qualified licensed professionals for the installation of hard wired carbon monoxide detectors.

a. In the event that the side wall horizontally vented gas fueled equipment is installed in a crawl space or an attic, the hard wired carbon monoxide detector with alarm and battery back-up may be installed on the next adjacent floor level.

b. In the event that the requirements of this subdivision can not be met at the time of completion of installation, the owner shall have a period of thirty (30) days to comply with the above requirements; provided, however, that during said thirty (30) day period, a battery operated carbon monoxide detector with an alarm shall be installed.

2. APPROVED CARBON MONOXIDE DETECTORS. Each carbon monoxide detector as required in accordance with the above provisions shall comply with NFPA 720 and be ANSI/UL 2034 listed and IAS certified.

3. SIGNAGE. A metal or plastic identification plate shall be permanently mounted to the exterior of the building at a minimum height of eight (8) feet above grade directly in line with the exhaust vent terminal for the horizontally vented gas fueled heating appliance or equipment. The sign shall read, in print size no less than one-half (1/2) inch in size, “GAS VENT DIRECTLY BELOW. KEEP CLEAR OF ALL OBSTRUCTIONS”.

4. INSPECTION. The state or local gas inspector of the side wall horizontally vented gas fueled equipment shall not approve the installation unless, upon inspection, the inspector observes carbon monoxide detectors and signage installed in accordance with the provisions of 248 CMR 5.08(2)(a)1 through 4.

(b) EXEMPTIONS: The following equipment is exempt from 248 CMR 5.08(2)(a)1 through 4:

1. The equipment listed in Chapter 10 entitled “Equipment Not Required To Be Vented” in the most current edition of NFPA 54 as adopted by the Board; and

2. Product Approved side wall horizontally vented gas fueled equipment installed in a room or structure separate from the dwelling, building or structure used in whole or in part for residential purposes.

(c) MANUFACTURER REQUIREMENTS - GAS EQUIPMENT VENTING SYSTEM PROVIDED. When the manufacturer of Product Approved side wall horizontally vented gas equipment provides a venting system design or

venting system components with the equipment, the instructions provided by the manufacturer for installation of the equipment and the venting system shall include:

1. Detailed instructions for the installation of the venting system design or the venting system components; and

2. A complete parts list for the venting system design or venting system.

(d) MANUFACTURER REQUIREMENTS - GAS EQUIPMENT VENTING SYSTEM NOT PROVIDED. When the manufacturer of a Product Approved side wall horizontally vented gas fueled equipment does not provide the parts for venting the flue gases, but identifies “special venting systems”, the following requirements shall be satisfied by the manufacturer:

1. The referenced “special venting system” instructions shall be included with the appliance or equipment installation instructions; and

2. The “special venting systems” shall be Product Approved by the Board, and the instructions for that system shall include a parts list and detailed installation instructions.

(e) A copy of all installation instructions for all Product Approved side wall horizontally vented gas fueled equipment, all venting instructions, all parts lists for venting instructions, and/or all venting design instructions shall remain with the appliance or equipment at the completion of the installation.

Appendix A - Lighting Instructions Plate

FOR YOUR SAFETY, READ BEFORE LIGHTING

WARNING: If you do not follow these instructions exactly a fire or explosion may result causing property damage, personal injury or loss of life.

A. This appliance has a pilot which must be lighted by hand or by remote control. Follow these instructions exactly. To save gas, turn the pilot off when not using the appliance for a prolonged period of time.

B. BEFORE LIGHTING, smell all around the appliance area for gas. Be sure to smell next to the floor because some gas are heavier than air and will settle on the floor.

WHAT TO DO IF YOU SMELL GAS

- Do not try to light any appliance.
- Do not touch any electric switch; do not use any phone in your building.
- Immediately call your gas supplier from a neighbor's phone. Follow the gas supplier's instructions.
- If you cannot reach your gas supplier, call the fire department.

C. Use only your hand to push in or turn the control knobs. Never use tools. If the knobs will not push in or turn by hand, don't try to repair them; call a qualified service technician. Force or attempted repair may result in a fire or explosion.

D. Do not use this appliance if any part has been under water. Immediately call a qualified service technician to inspect the appliance and to replace any part of the control system and any gas control, which has been under water.

LIGHTING INSTRUCTIONS

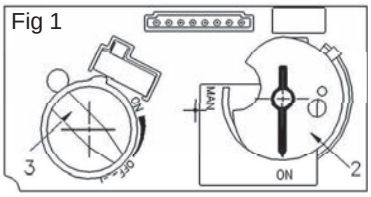

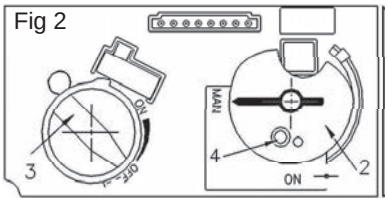

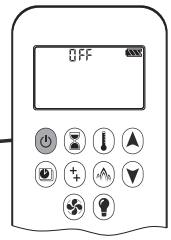

1. STOP! Read the safety information above

2. TO CLEAR ANY GAS, turn main valve off by pressing the button on remote handset (1). Wait five (5) minutes to clear out any gas, then smell for gas, including near the floor. If you smell gas,STOP! follow "B" in the safety information above on this label. If you don't smell gas, go to the next step.

3. AUTOMATIC IGNITION: MAN-knob (2) in ON position. Ensure Flame Adjustment knob (3) is set to lowest setting (Fig. 1). Locate the pilot (Fig. 3.) inside the firebox.
On the remote control handset, press the button; a short acoustic signal confirms the start has begun. Further short acoustic signals indicate the ignition process is in progress When the pilot is lit, the Flame Adjustment knob (3) will automatically rotate to the highest setting. Press the button on the remote control handset to reduce the flame height.

4. MANUAL IGNITION: MAN-knob (2) in MAN position (Fig. 2).
With the window off, locate the pilot (Fig. 3) inside the firebox. Set Flame Adjustment knob (3) to the lowest setting. Push down the metallic core (4) with a pen or similar instrument; this will establish the pilot gas flow. Light gas at the pilot (5) with a match. Continue holding down metal core (4) for about 10 seconds; after release, pilot should remain lit. If the pilot will not stay lit after several tries, turn the gas control knob (3) to OFF and call your local service technician or gas supplier. Reinstall the window and set the MAN-knob (2) to ON; turn Flame Adjustment knob (3) up or down manually or use the and buttons on the remote control handset to adjust the flame height.

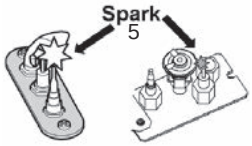

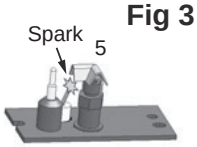

Fig 3

TO TURN OFF GAS TO APPLIANCE

AUTOMATIC SHUT-OFF (using the remote control handset):
Press and hold the button on the remote control handset to shut-off the main burner gas flow.
Press the button on remote handset to shut-off the appliance, including pilot flame.

Appendix B - Remote Control Operation

Initial Pairing

Before the remote control can be used with the fireplace, it must be paired. See *Remote Control Set-Up* on page 46.

Main Display and Remote Handset

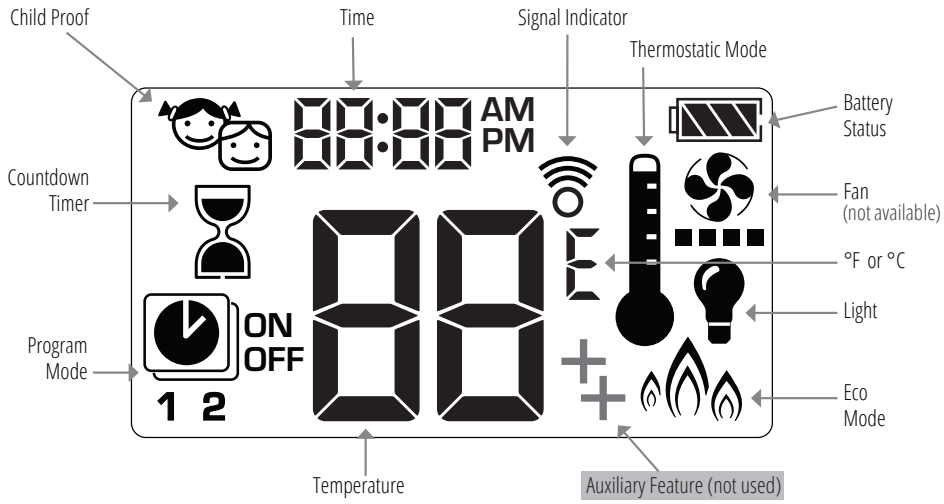

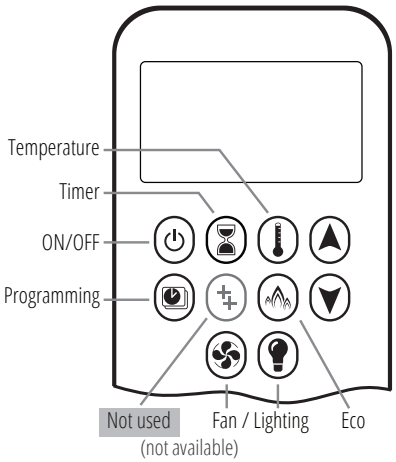

To Turn On Fire

NOTE: When pilot ignition is confirmed, motor automatically turns to maximum flame height.

One-Button lighting (default): ⏻
Two-Button lighting: ⏻ + ▲ simultaneously

Press and hold for 4 seconds, until 8 short beeps and a blinking series of lines confirms the start sequence has begun. Release button.

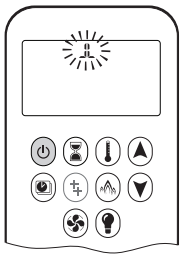

Main gas flows once pilot ignition is confirmed.

Handset automatically goes into manual mode after main burner ignition.

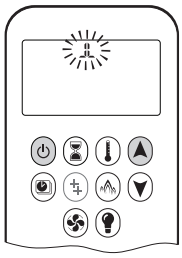

Standby Mode (Pilot Flame)

Press and hold ▼ to set appliance to pilot flame.

CAUTION: If the pilot does not stay lit after several tries call your local service technician or gas supplier.

To Turn Off Fire

Press ⏻ to turn OFF.

Note: There is a 2 minute delay after switching off before the next ignition is possible.

CAUTION: Always check the fire and pilot visually to ensure they are off.

Flame Height Adjustment

To increase flame height, press and hold ▲.

To decrease flame height, press and hold ▼. You may hold the button down until the fire is set to pilot flame only.

Appendix B - Remote Control Operation

Designated Low Fire and High Fire

To go to low fire, double-click ▼. "LO" is displayed.

Note: Flame goes to high fire first before going to low fire.

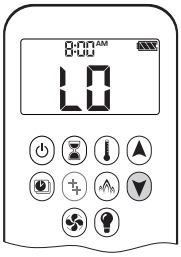

To go to high fire, double-click ▲. "HI" is displayed.

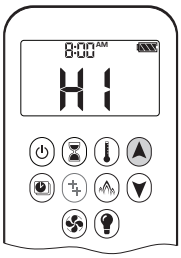

Choosing 1-Button or 2-Button Ignition

On the remote control handset, you can choose a 1-button or 2-button ignition. You can also choose to activate or deactivate some of the functions. By default, the handset is set to a 1-button ignition.

To change from 1-button to 2-button ignition, remove the batteries, wait 10 seconds, reinsert batteries, and immediately when the display flashes, press and hold the ⏻ button for 10 seconds. **ON** is displayed and **1** is flashing. When change is complete, **1** changes to **2**.

To change from 2-button to 1-button ignition, proceed the same as above. **ON** is displayed and **2** is flashing. When change is complete, **2** changes to **1**.

Deactivating or Activating Functions

These functions are active by default, but can be deactivated at any time:

- Child Proof
- Program Mode
- Thermostatic Mode
- Eco Mode
- Circulating Fan Operation
- Countdown Timer

> **NOTE:** The function Auxiliary Feature is not used.

To deactivate functions:

1. Install batteries. All icons are displayed and flashing.
2. While the icons are flashing, press the relevant function button and hold for 10 seconds.
3. The function icon will flash until deactivation is complete. Deactivation is complete when the function icon and two horizontal bars (▬ ▬) are displayed.

Note: If a deactivated button is pressed, there is no function, and the two horizontal bars are displayed.

To activate functions:

1. Install batteries. All icons are displayed and flashing.
2. While the icons are flashing, press the relevant function button and hold for 10 seconds.
3. The function icon will continue to flash until activation is complete, and then turn solid. Activation is complete when the function icon is displayed.

Setting Celsius or Fahrenheit

To change between °C and °F, press and hold ⏻ + ⌛ simultaneously.

Note : °C = 24-hour clock
°F = 12-hour clock

Setting the Time

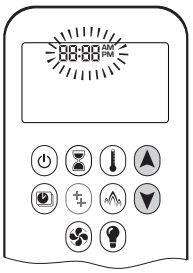

1. Press ▲ + ▼ simultaneously. **Day** flashes.
2. Press ▲ + ▼ to select a number to correspond with the day of the week.
   - 1 = Monday
   - 2 = Tuesday
   - 3 = Wednesday
   - 4 = Thursday
   - 5 = Friday
   - 6 = Saturday
   - 7= Sunday
3. Press ▲ + ▼ simultaneously. **Hour** flashes.
4. To select hour press ▲ or ▼.
5. Press ▲ + ▼ simultaneously. **Minutes** flash.
6. To select minutes press ▲ or ▼.
7. To confirm, press ▲ + ▼ simultaneously or wait.

Appendix B - Remote Control Operation

Child Proof

Your handset can be set to lock out all commands to the fireplace, except OFF.

To turn Child Proof ON:

1. Press and hold ⏻ + ▼ simultaneously.
2. is displayed. Child Proof is now active.

To turn Child Proof OFF:

1. Press and hold ⏻ + ▼ simultaneously.
2. disappears. Child Proof is now inactive, and the handset has full function.

Countdown Timer

You can set your fireplace to automatically turn off at the end of a timer.

To set a Countdown Timer:

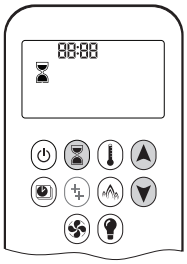

1. Press and hold ⌛ until ⌛ is displayed.
   Hour flashes.
2. Press ▲ or ▼ to select Hour.
3. To confirm, press ⌛.
   Minutes flash.
4. Press ▲ or ▼ to select Minutes.
5. To confirm, press ⌛ or wait.

To turn off a Countdown Timer:

1. Press ⌛, and the ⌛ countdown disappears.

Note: The Countdown Timer only works in Manual, Thermostatic, and Eco modes. Maximum countdown time is 9 hours and 50 minutes.

Light/Dimmer Operation

On:

Press 💡, 💡 is displayed. Light is on at preset level.

Off:

Press 💡, 💡 disappears. Light turns off.

Setting:

1. Press and hold 💡 until 💡 flashes.
2. To adjust light between 20-100% press ▲ or ▼.
3. To confirm setting either press 💡 or wait.
   💡 is displayed.

Note: The light works independently of the pilot flame. If you want the light on but no flame, press 💡 button.

Appendix B - Remote Control Operation

Modes of Operation

Thermostatic Mode

The room temperature is measured and compared to the set temperature. The flame height is automatically adjusted to achieve the set temperature.

Program Mode

The temperature is controlled by Programs 1 and 2, each of which can be set to go on and off at specific times, at a set temperature.

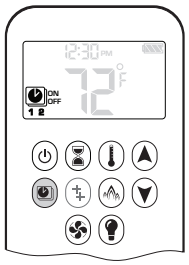

Eco Mode

Flame height modulates between high and low. If the room temperature is lower than the set temperature, the flame height stays on high for a longer period of time. If the room temperature is higher than the set temperature, the flame height stays on low for a longer period of time. One cycle lasts approximately 20 minutes.

If any of the above modes (Thermostatic, Program, or Eco) are engaged by the MyFire app over WiFi, the handset will display **APP**.

Manual Mode

The on/off status of the fireplace, as well as flame height, are manually controlled by the user.

Thermostatic Mode

On:

Press . is displayed. Preset temperature displays briefly, followed by the room temperature.

Setting Desired Temperature:

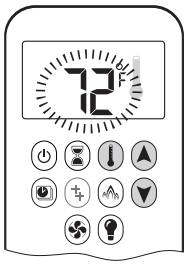

1. Press and hold until is displayed and set temperature flashes.
2. To adjust set temperature, press or .
3. To confirm, press or wait.

Off:

1. Press .
2. Press or to go to Manual Mode.
3. Press to go to Program Mode.
4. Press to go to Eco Mode.

Program Mode

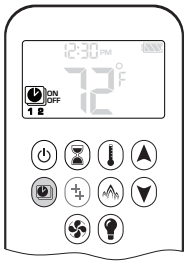

On:

Press .
, **1** or **2**, **ON** or **OFF** are displayed.

Off:

1. Press , , or to go to Manual Mode.
2. Press to go to Thermostatic Mode.
3. Press to go to Eco Mode.

Note: The set temperature for Thermostatic Mode is the temperature for the ON time in Program Mode. Changing the Thermostatic Mode set temperature also changes the ON time temperature in Program Mode.

Default Settings:

- ON TIME (Thermostatic) TEMPERATURE: 70°F / 21°C
- OFF TIME TEMPERATURE: "– –" (pilot flame only)

Appendix B - Remote Control Operation

Temperature Setting:

1. Press and hold until flashes. **ON** and set temperature (set in Thermostatic Mode) is displayed.
2. To continue, press or wait. , **OFF** displayed, temperature flashes.
3. Select off temperature by pressing or .
4. To confirm, press .

Note: The on (Thermostatic) and off set temperatures are the same for each day.

Day Setting:

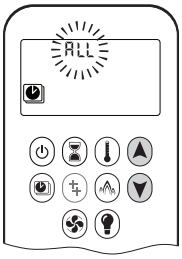

1. **ALL** flashes. Press or to choose between:
   - **ALL** = same settings ON-OFF every day
   - **SA:SU** = same settings ON-OFF Saturday and Sunday
   - **1, 2, 3, 4, 5, 6, 7** = daily timer—unique ON-OFF settings for a single day of the week, for multiple days of the week or for every day of the week.
2. To confirm, press .

ALL Selected (same settings every day)

On Time Setting (PROGRAM 1)

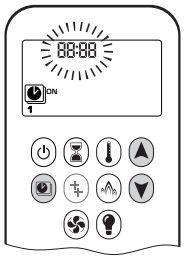

1. , **1, ON** are displayed. **ALL** is displayed briefly. Hour flashes.
2. To select hour, press or .
3. To confirm, press . , **1, ON** are displayed. **ALL** displayed briefly. Minutes flash.
4. To select minutes, press or .
5. To confirm, press .

Off Time Setting (PROGRAM 1)

1. , **1, OFF** are displayed. **ALL** is displayed briefly. Hour flashes.
2. To select hour, press or .
3. To confirm, press . , **1, OFF** are displayed. **ALL** displayed briefly. Minutes flash.
4. To select minutes, press or .
5. To confirm, press .

Note: Either continue to PROGRAM 2 and set ON and OFF times or stop programming at this point, and PROGRAM 2 remains deactivated.

Note: PROGRAM 1 and 2 use the same ON (Thermostatic) and OFF temperatures. Once a new ON (Thermostatic) and/or OFF temperature has been set, that temperature becomes the new default setting.
Note: ON and OFF times programmed for PROGRAM 1 and PROGRAM 2 become the new default times.

The batteries must be removed to clear the PROGRAM 1 and PROGRAM 2 ON and OFF times and temperatures.

SA:SU (same settings Saturday and Sunday) or 1, 2, 3, 4, 5, 6, 7 (different settings on different days)

- Set on time and off time using the same procedure as "ALL Selected" above.
- Waiting to finish setting.

Eco Mode

On:

Press button to enter Eco Mode. is displayed.

Flame height modulates between high and low every 20 minutes.

Off:

Press button to exit Eco Mode. disappears.

Appendix B - Remote Control Operation

Low Battery Indication

⚠ **CAUTION:** Do not use a screwdriver or other metallic object to remove the batteries from the battery holder or the handset. This could cause a short circuit.

Handset

The battery icon will show when the battery needs to be replaced. Replace with two 1.5 V AAA alkaline batteries.

Receiver

Frequent beeps for 3 seconds when the motor turns indicate the batteries in the battery holder need to be replaced. Replace with four 1.5 V AA alkaline batteries.

Automatic Shut Off

Countdown Timer

At the end of countdown time period, the fire turns off. The Countdown Timer only works in Manual, Thermostatic, and Eco Modes. Maximum countdown time is 9 hours and 50 minutes.

Low Battery Receiver

With low battery power in the battery holder, the system shuts off the fire completely. (This will not happen if the power is completely interrupted.)

Seven Day Shut Off

The system shuts off the fire completely if there is no change in flame height for 7 days.

Automatic Turn Down

3 Hour No Communication Function

The valve will turn to pilot flame if there is no communication between the handset and receiver for a 3-hour period. The fire will continue to function normally when communication is restored.

Appendix B - Remote Control Operation

Error Codes

In the event of an error condition with the handset or fireplace, the handset will display an error code.

Failure Code	Message on Handset	Duration of Display	Symptom	Possible Cause
F04	F04	4 sec	• No pilot flame within 30 sec • **Note:** after 3 failed ignition sequences, F06 shown	• No gas supply • Air in pilot supply line • No spark • Reversed polarity in thermocouple wiring
F06	F06	4 sec	• 3 failed ignition sequences in 5 minutes • Fire is not responding, no pilot flame	• No gas supply • Air in pilot supply line • No spark • Reversed polarity in thermocouple wiring • Incorrect pilot orifice if valve has been converted from LPG to NG or vice versa
F07	Low battery symbol	Permanent	• Battery icon flashes on handset display	• Low battery in handset
F09	F09	4 sec	• Fire is not responding • No electronic control of fire	• Down arrow button was not pressed during pairing • Receiver and handset are not synced
F46	F46	4 sec	• Fire is not responding • Intermittent response • No electronic control of fire	• No or bad connection between receiver and handset • No power at receiver (batteries low) • Low communication range (mains adapter faulty, handset not communicating with receiver)

Appendix C - Wall Switch Operation

Using the Wall Switch

The Wall Switch can be used to control the fireplace. You can turn the pilot on or off and you can increase or decrease the flame height.

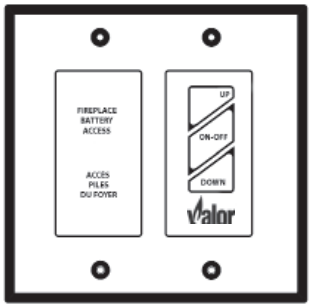

Note that the thermostat and programming functions are not available with the wall switch.

Turning Appliance ON and OFF

Press ON-OFF button once to light pilot. Press again to shut off pilot.

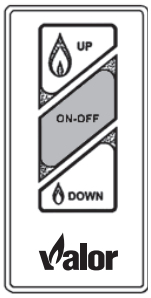

Adjusting Flame Height

Press and hold large flame button to gradually increase flame height.

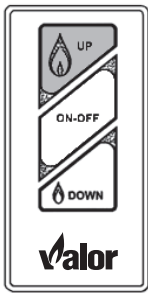

Press and hold small flame button to gradually decrease flame height.

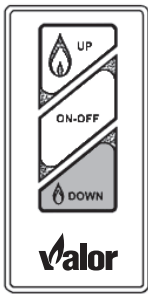

Appendix D - HeatShift

HeatShift™ System

Planning and Installation: LX1 with HeatShift®

For use with **2100K Valor Heaters ONLY**

Application

The HeatShift® convection duct kit redistributes the warm air flow away from the fireplace opening to a more desirable location using natural convection without use of a fan.

HeatShift Canopy Kit 2100HSC: the warm air flow is gathered in a canopy hood attached to the fireplace and relocated to an outlet in the same room. The chase does not extend all the way to the ceiling, resulting in a visual space above the fireplace.
Plenums LDK3, LDK4, or LDK9: the warm air flow is relocated to a position higher up the wall, out the sidewalls, or even to an adjacent room.
Termination Plates LDK7: the warm air flow is discharged through a gap (min. 2-1/2") between the wall above the fireplace and the ceiling. **LDK7's discharge opening must be located in the same room as the fireplace.**
The result is much cooler wall temperatures above the fireplace opening for locating televisions, artwork, etc.

Only the HeatShift kits listed below may be used with the LX1.

As a further option, the warm airflow may be extracted away from the duct kit plenum **(LDK4 ONLY)** by connecting a 1270RBK HeatSplit Remote Blower Kit to the duct kit plenum.

Kits

There are 5 kits to choose from:

- 2100HSC—HeatShift Canopy kit for LX1
- LDK3—14" Plenums (2), includes grilles
- LDK4—38" Plenum
- LDK7—Duct Termination Plates (2)—for wall valance discharge ONLY
- LDK9—30" plenum

Optional accessories:

- LDK5—38" Finishing Frame, to use with LDK4
- LDK6— 5" dia Aluminum 2-ply Flex Kit—
  2 x 10'–0" lengths, may be cut to required length
- LDK10—30" Finishing Frame, to use with LDK9

⚠ WARNING

DO NOT cover or place objects in front of or on top of air outlet(s). AVOID locating outlet within 7 feet above floor level as discharge temperatures are hot!

⚠ WARNING

When placing discharge close to ceilings, staining or streaking may occur on light colored ceilings due to any dust, etc. in air flow; placing plenum(s) lower on the wall will help reduce the possibility of staining or streaking.

Note

5-inch diameter duct used with this kit must be metal and meet requirements of UL-181 Class 1 Air Duct. Flexible aluminum duct is acceptable provided it meets the UL-181 Class 1 requirements.

NOTE—Sprinklers

Depending on room temperature, HeatShift air discharge temperatures can be in the range of 210 °F (99 °C). Please refer to local building code, choose appropriate sprinkler heads and place them accordingly.
See Framing and Clearances pages.

Appendix D - HeatShift

2100HSC Kit Contents

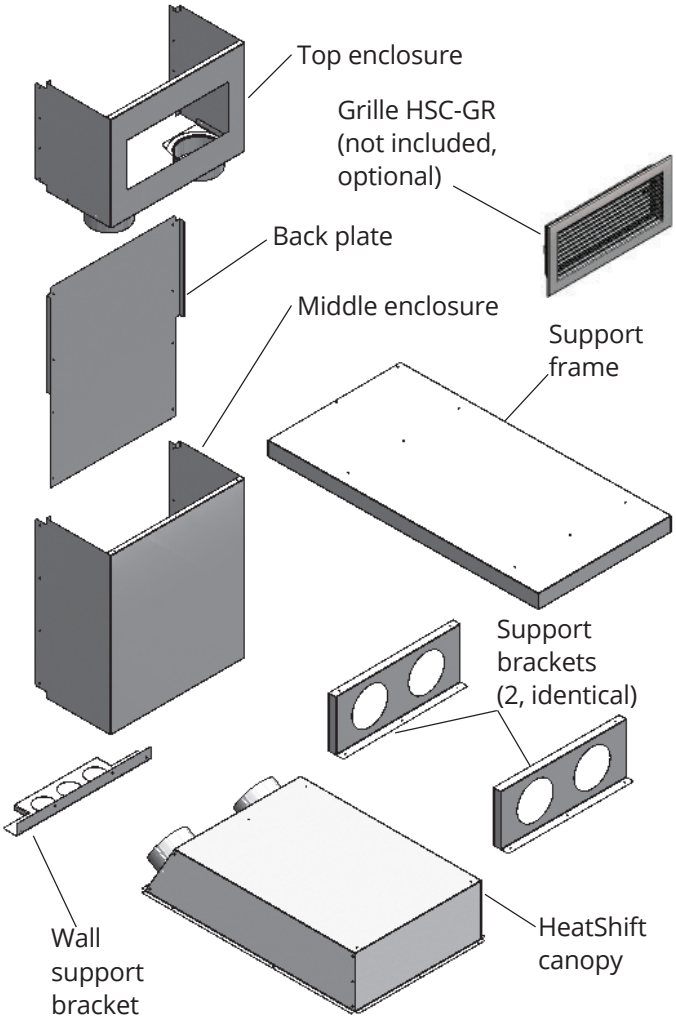

2100HSC

Takeoff collars not required.

Qty (2) 2x4 cut to planned height required (not included)

Appendix D - HeatShift

LDK Kits Contents

LDK4
38" x 2"

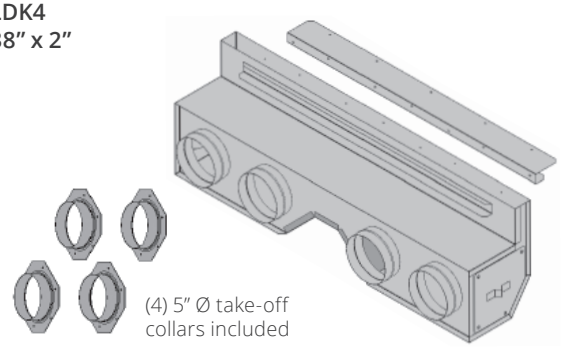

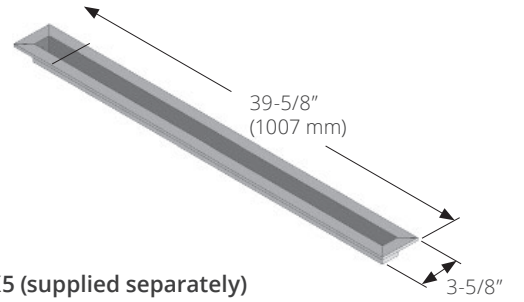

LDK5 (supplied separately)
38" frame, white

LDK3
2 - 14" x 6"

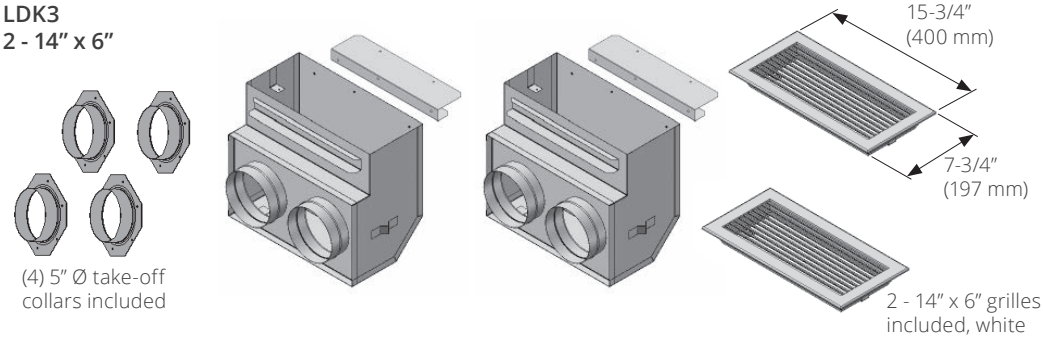

LDK6
2 - 10' x 5" (aluminum flex)

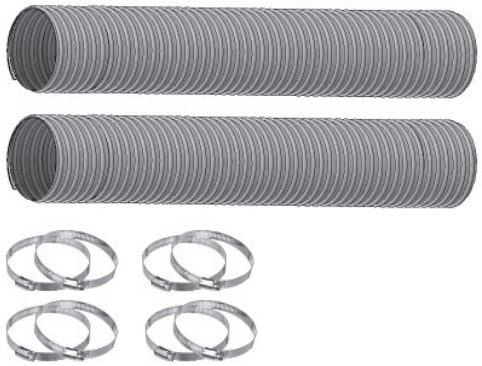

LDK7
2 Duct termination plates

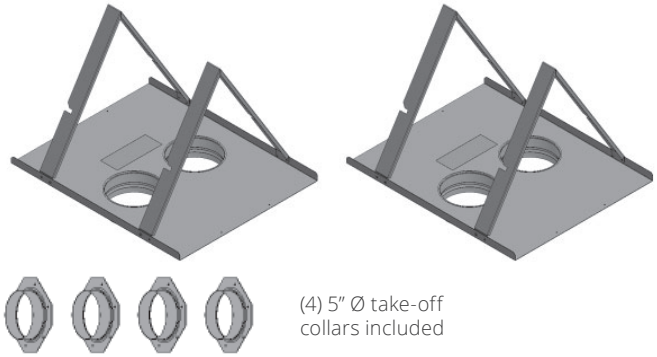

LDK9
30" x 2"

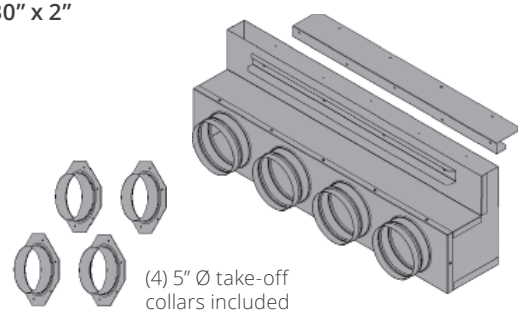

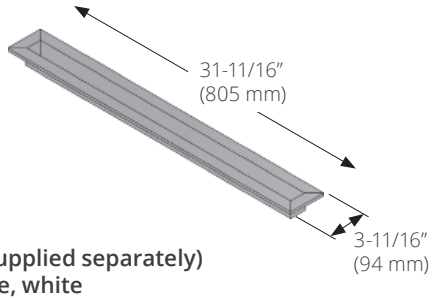

LDK10 (supplied separately)
30" frame, white

Appendix D - HeatShift

Overview - 2100HSC kit

See Installation manual provided with 2100HSC for all details of installation.

WARNING

DO NOT PUT ANYTHING on top of the fireplace as it is very hot.

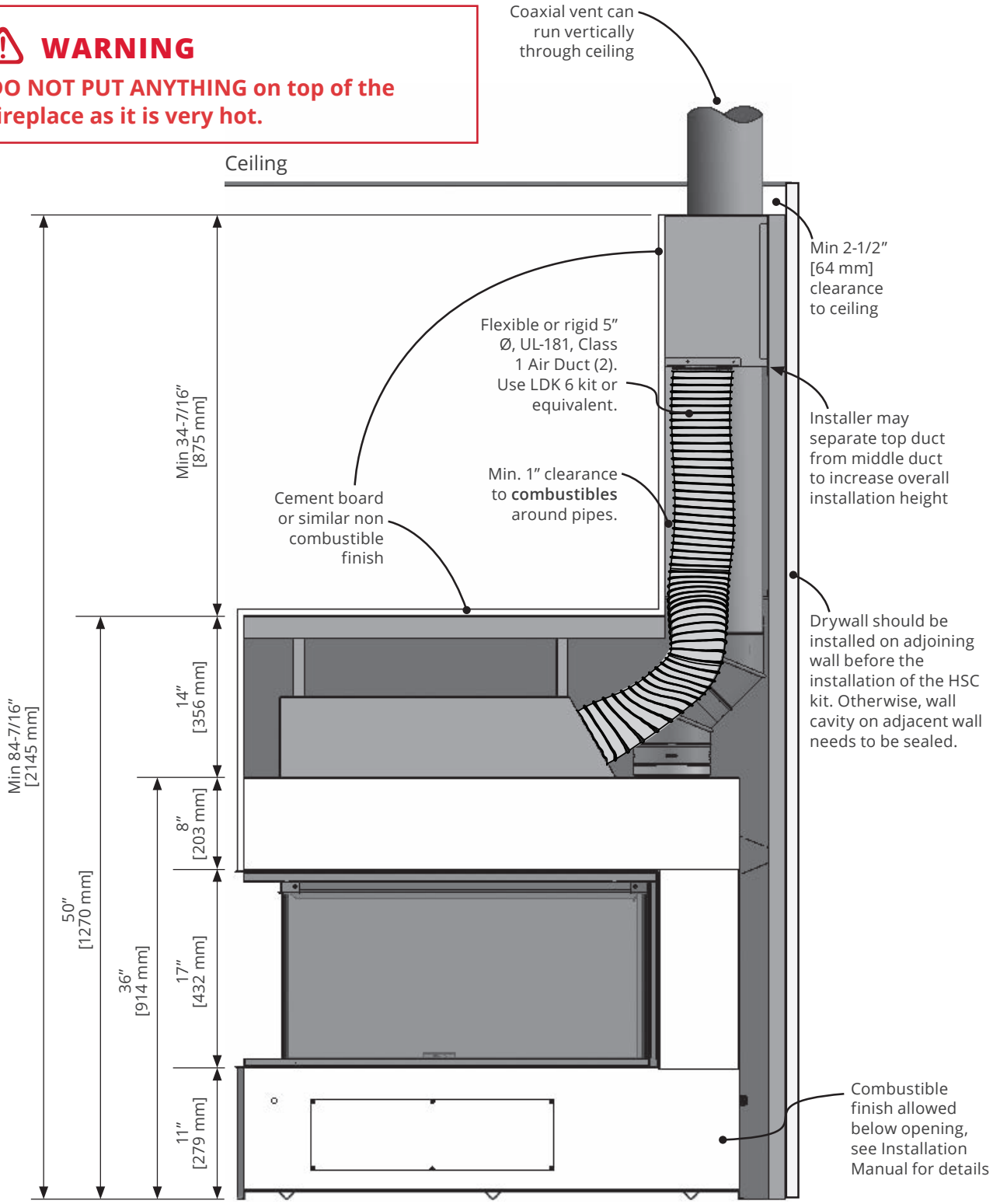

See 2100HSC Installation Manual for more details.

Appendix D - HeatShift

Suggested Configurations

Not to scale

LX1 Series with LDK Kits

Front or rear wall outlet using LDK4

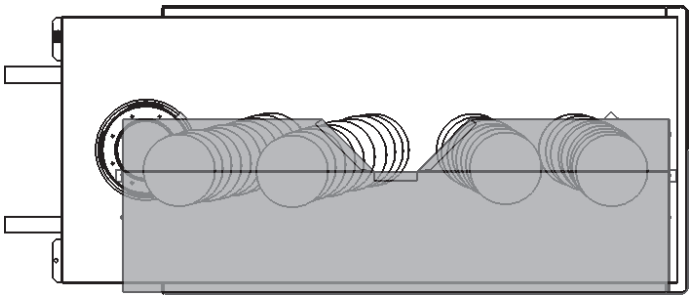

Note: Coaxial vent must be diverted toward the wall to bypass the HeatShift outlet overhead when vented vertically.

Front or rear wall outlet using LDK9

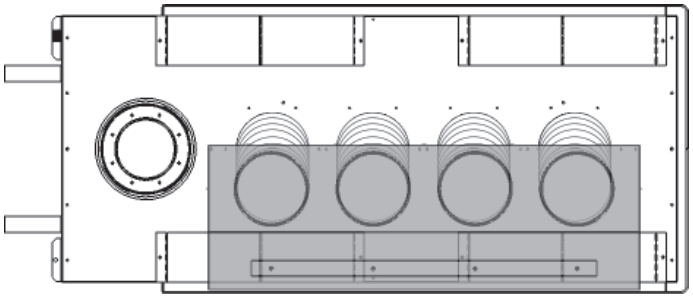

Front and rear wall outlet using LDK3

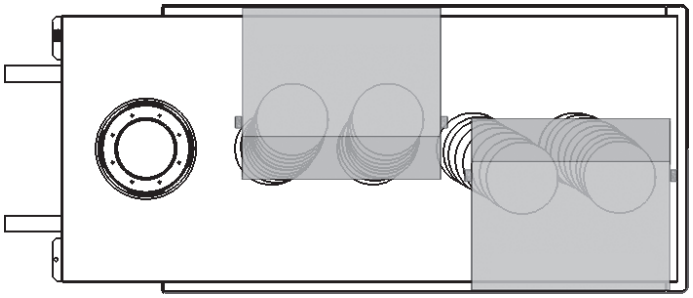

Top outlet using LDK7

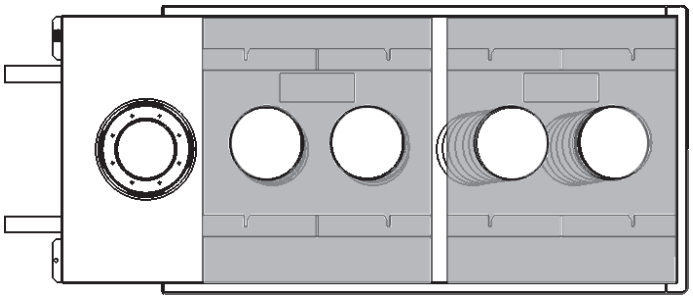

Note: When using the LDK7, the discharge must be located in the same room as the fireplace. The termination plates may be trimmed to fit.

⚠ WARNING

The plenum duct kits are approved for horizontal discharge ONLY. The termination duct plates are approved for vertical upward discharge ONLY. DO NOT install plenum or termination plates in floor or ceiling. DO NOT COVER OR PLACE objects in front of or on top of air outlet(s). AVOID locating outlet within 7 feet of the floor level as discharge air temperatures are hot!

DO NOT DISCHARGE THROUGH EXTERIOR WALLS!

Appendix D - HeatShift

Overview - LDK3, LDK4, and LDK9 kits

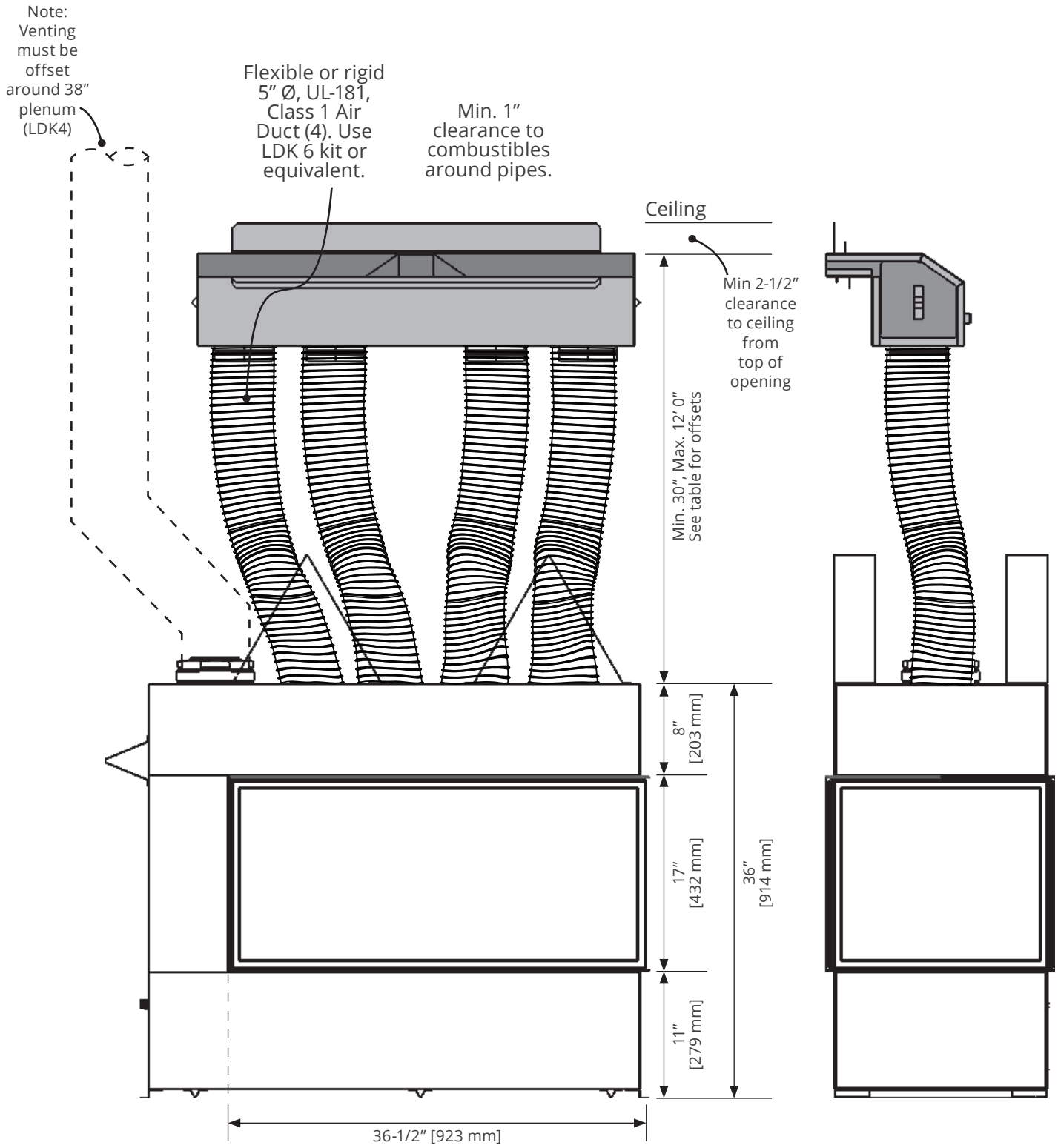

Appendix D - HeatShift

Overview - LDK7 kit

Note - Discharge opening must be located in the same room as fireplace when using LDK7.

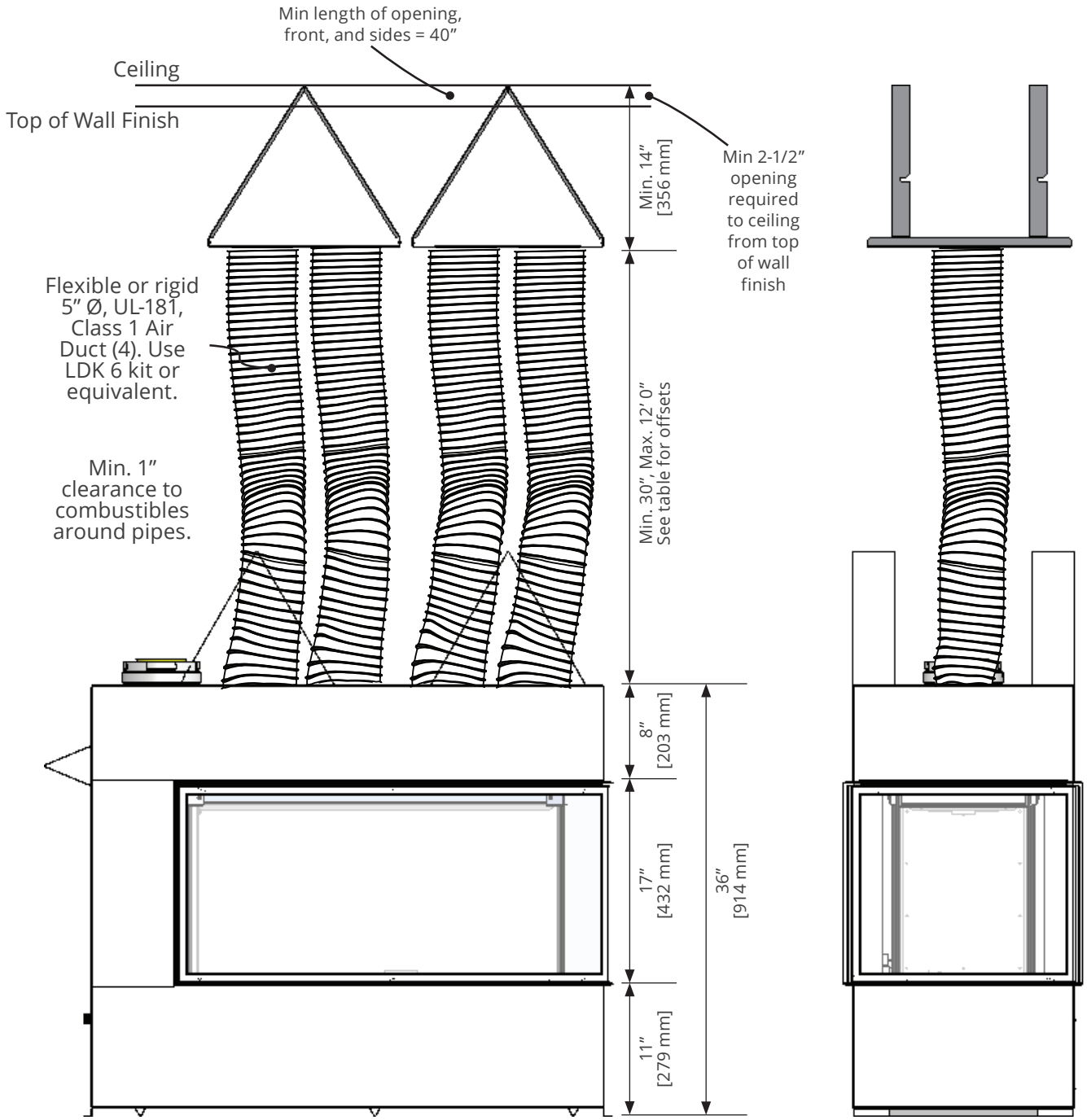

Appendix D - HeatShift

Y Vertical Rise	X Max. Allowable Horizontal Offset
30″	24″
36″	36″
42″	48″
48″	60″
54″	72″
60″	84″
66″	96″
12′-0″	96″ Max.

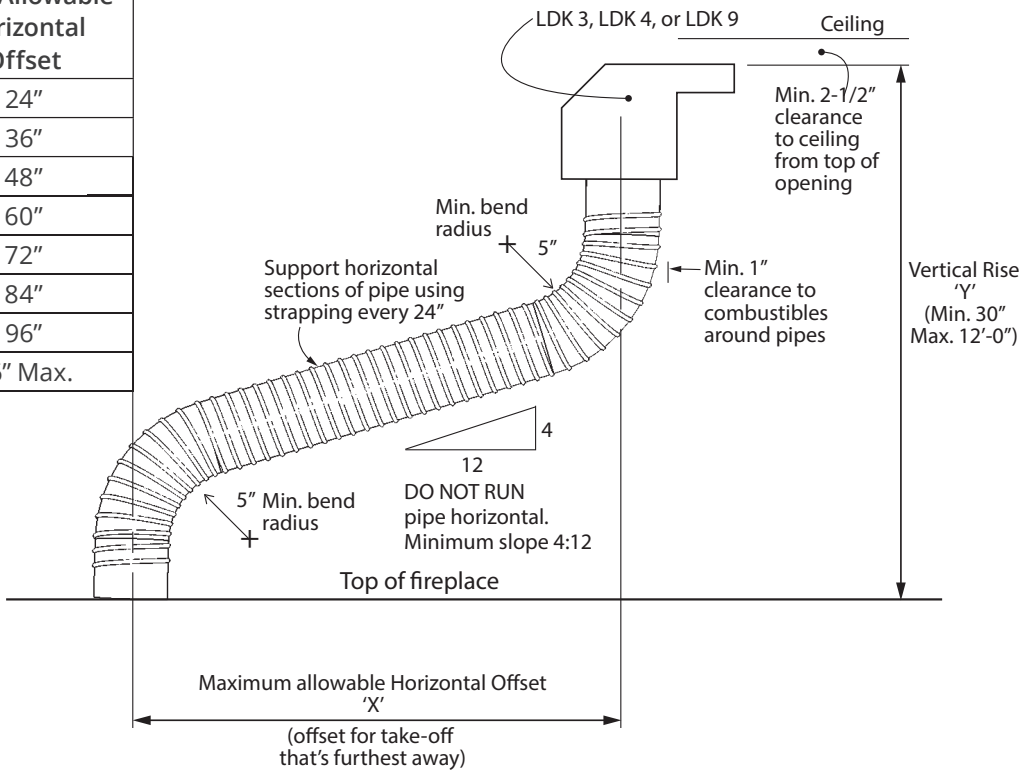

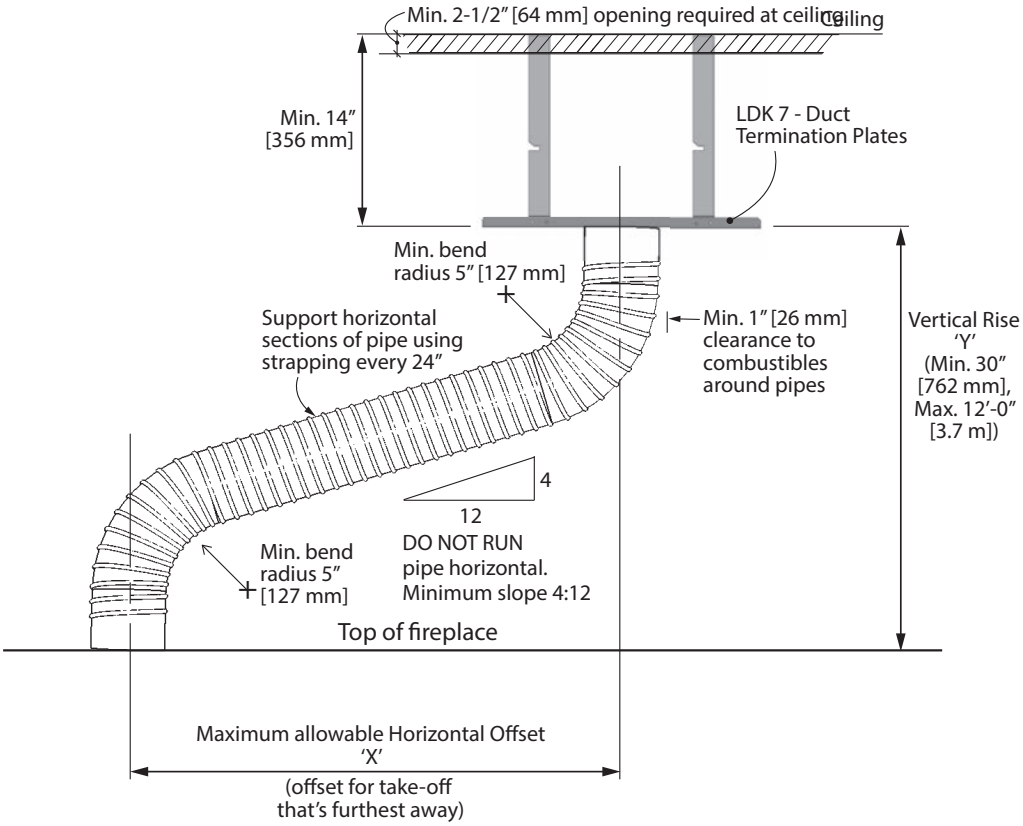

Appendix D - HeatShift

Plenum Dimensions

LDK 4

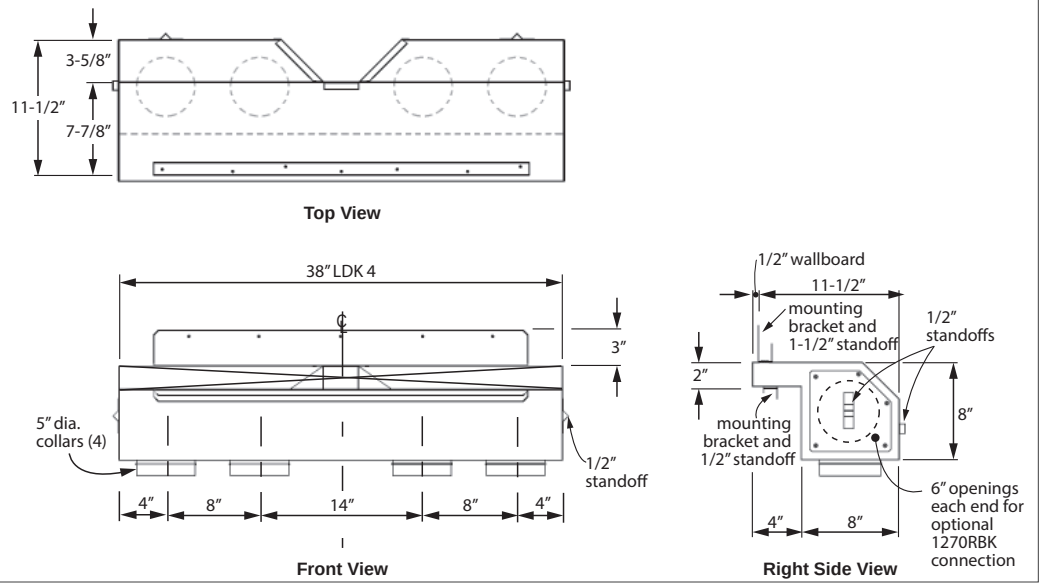

LDK 3

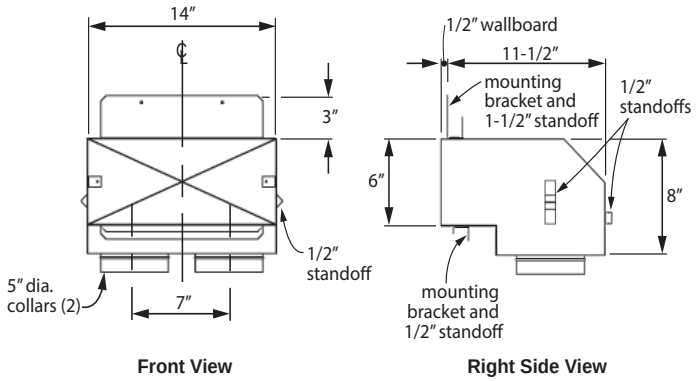

LDK 9

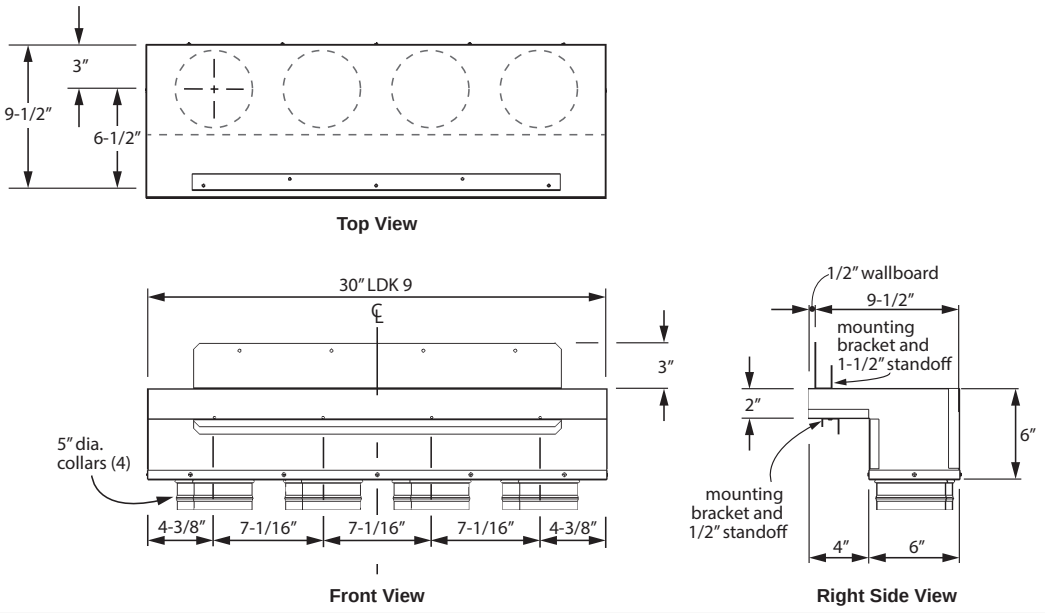

Appendix D - HeatShift

LDK7 Plates Dimensions

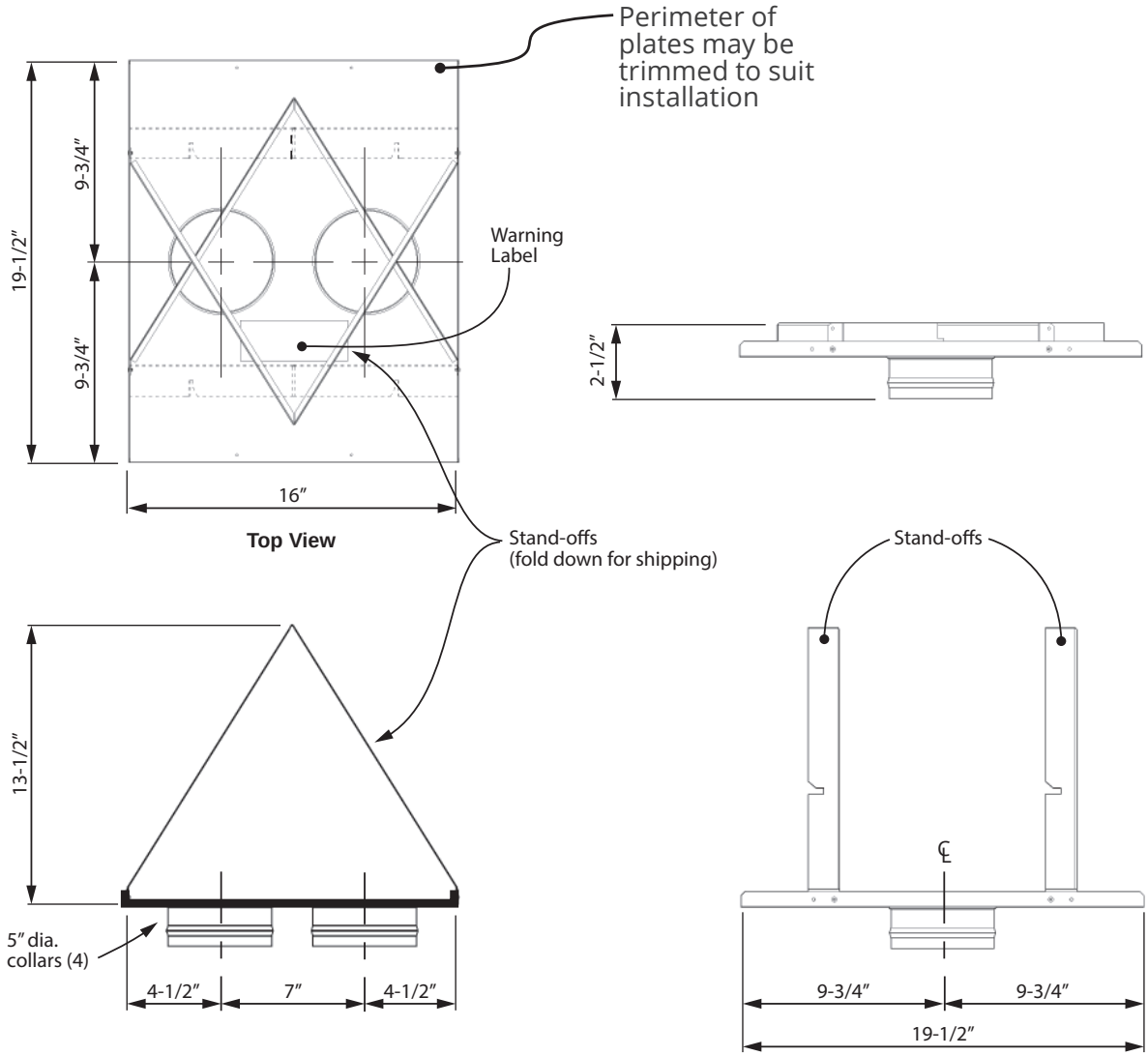

Appendix D - HeatShift

Rough Frame Openings

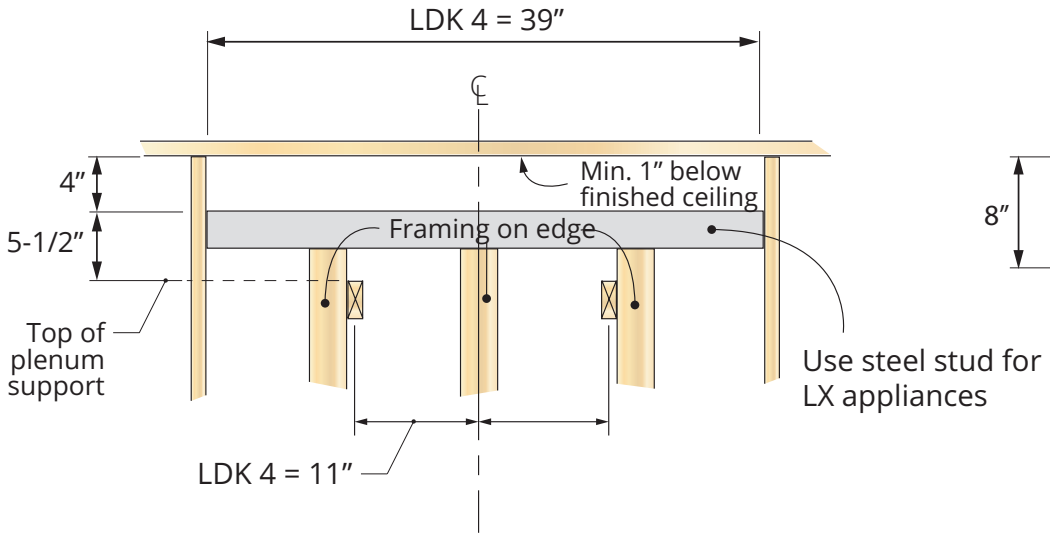

LDK 4

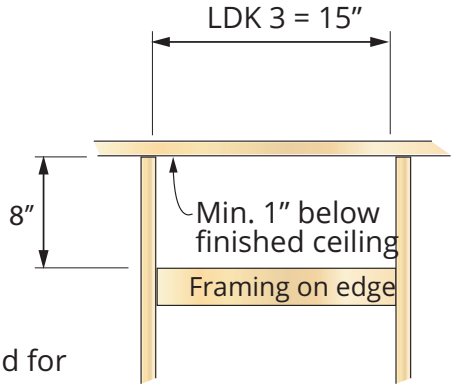

LDK 3

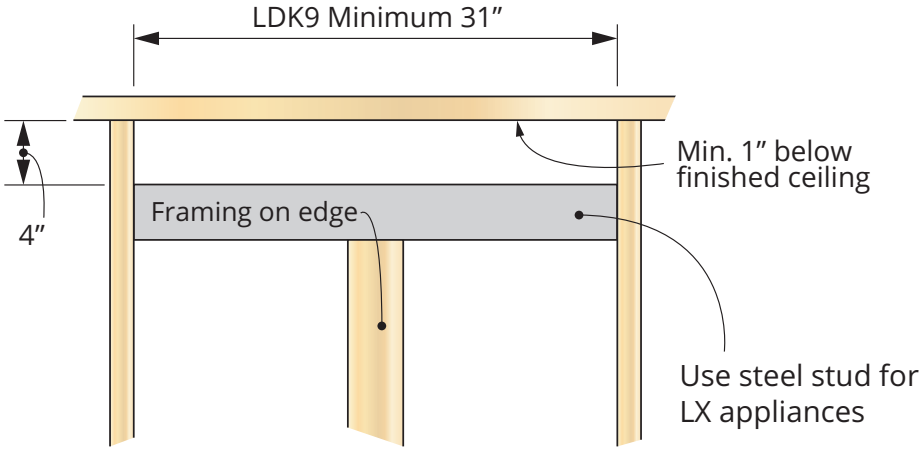

LDK 9

Appendix D - HeatShift

Framing and Clearances

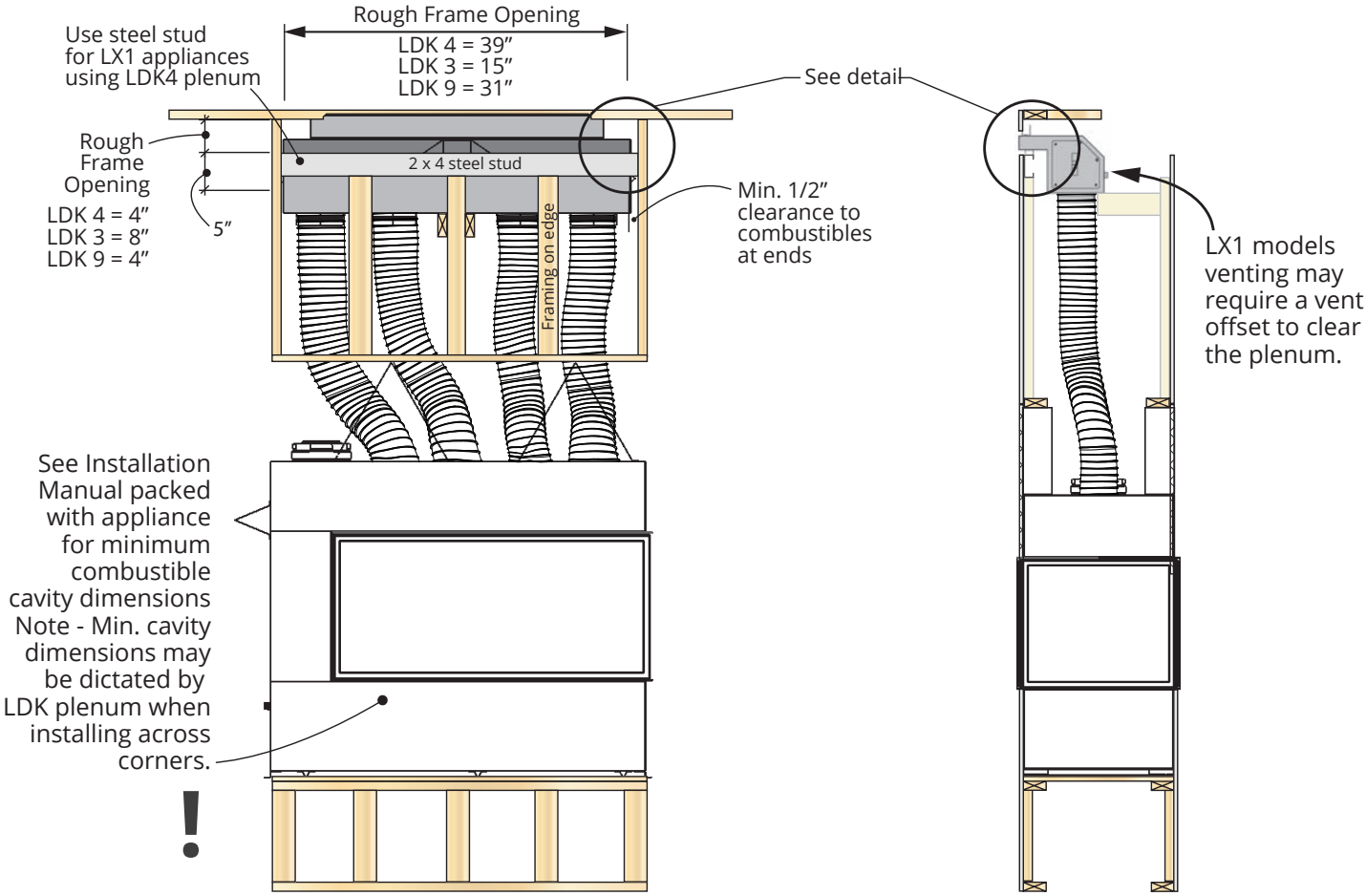

NOTE—Sprinklers

Depending on room temperature, HeatShift air discharge temperatures can be in the range of 210 °F (99 °C). Please refer to local building code, choose appropriate sprinkler heads and place them accordingly.

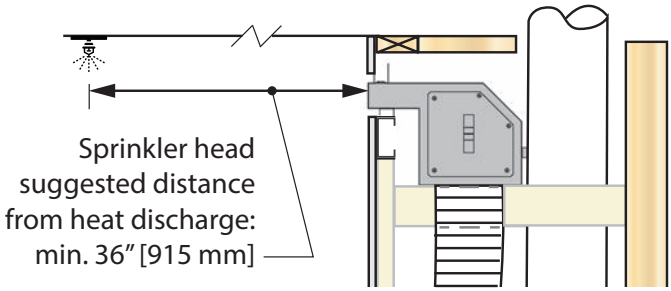

Appendix D - HeatShift

Framing and Clearances

LDK4

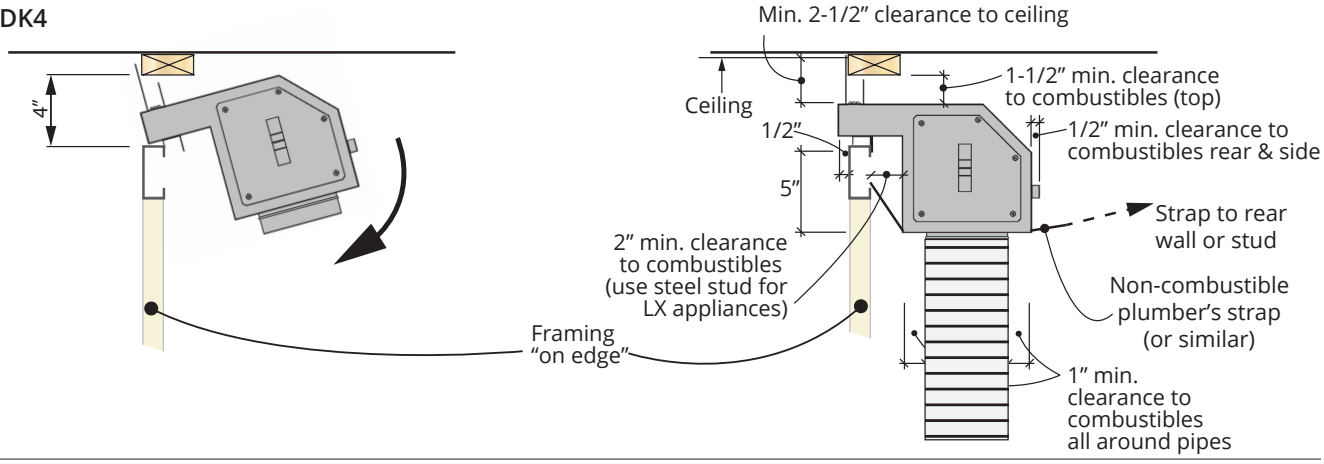

LDK3

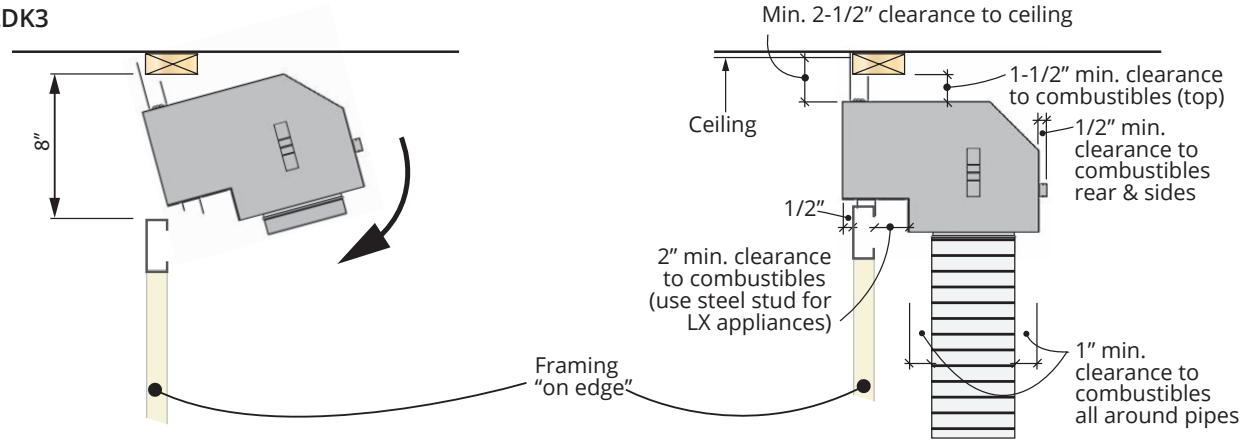

LDK9

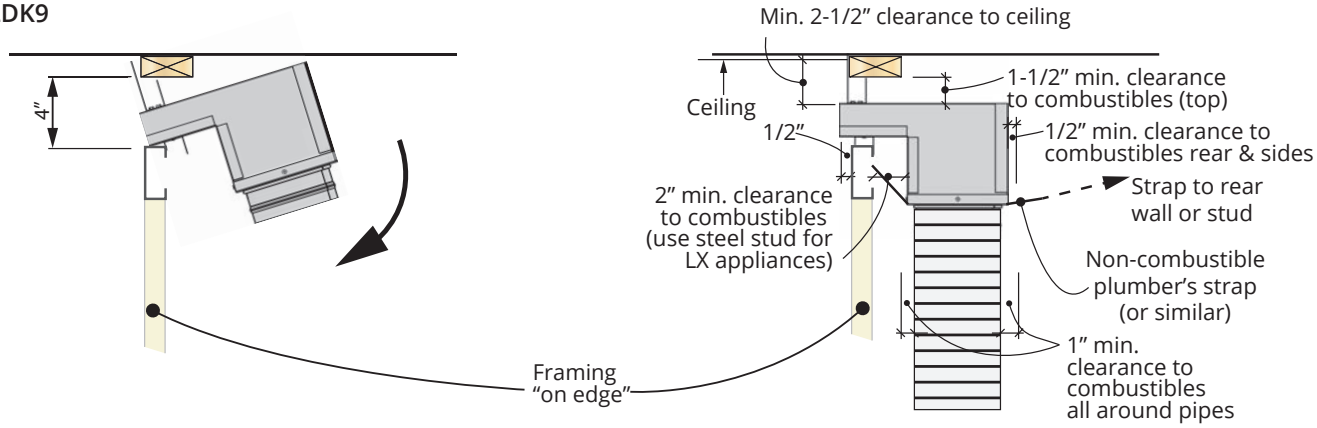

NOTE—Sprinklers

Depending on room temperature, HeatShift air discharge temperatures can be in the range of 210 °F (99 °C). Please refer to local building code, choose appropriate sprinkler heads and place them accordingly.

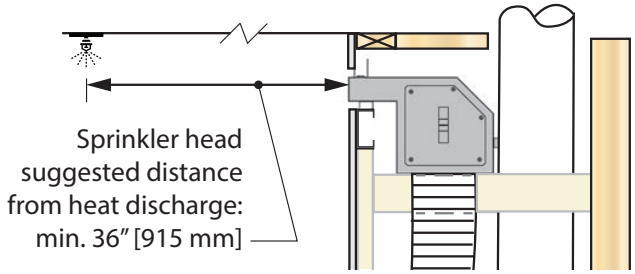

Appendix D - HeatShift

LDK 4 with optional HeatSplit
(not approved with outdoor installations)

HeatShift™ + HEATSPLIT

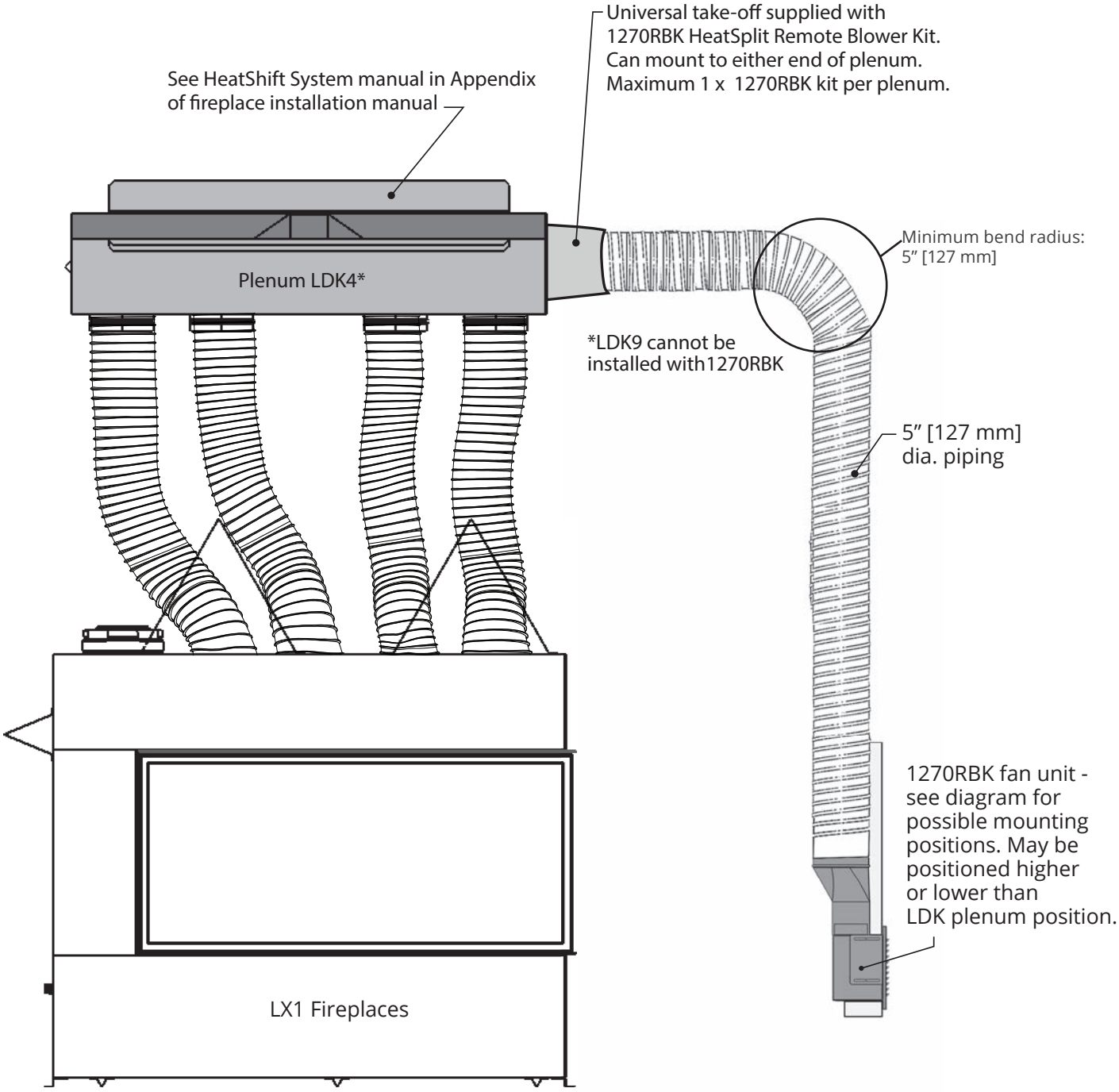

Appendix D - HeatShift

Wall Valance Discharge Opening using LDK7—Duct Termination Plates

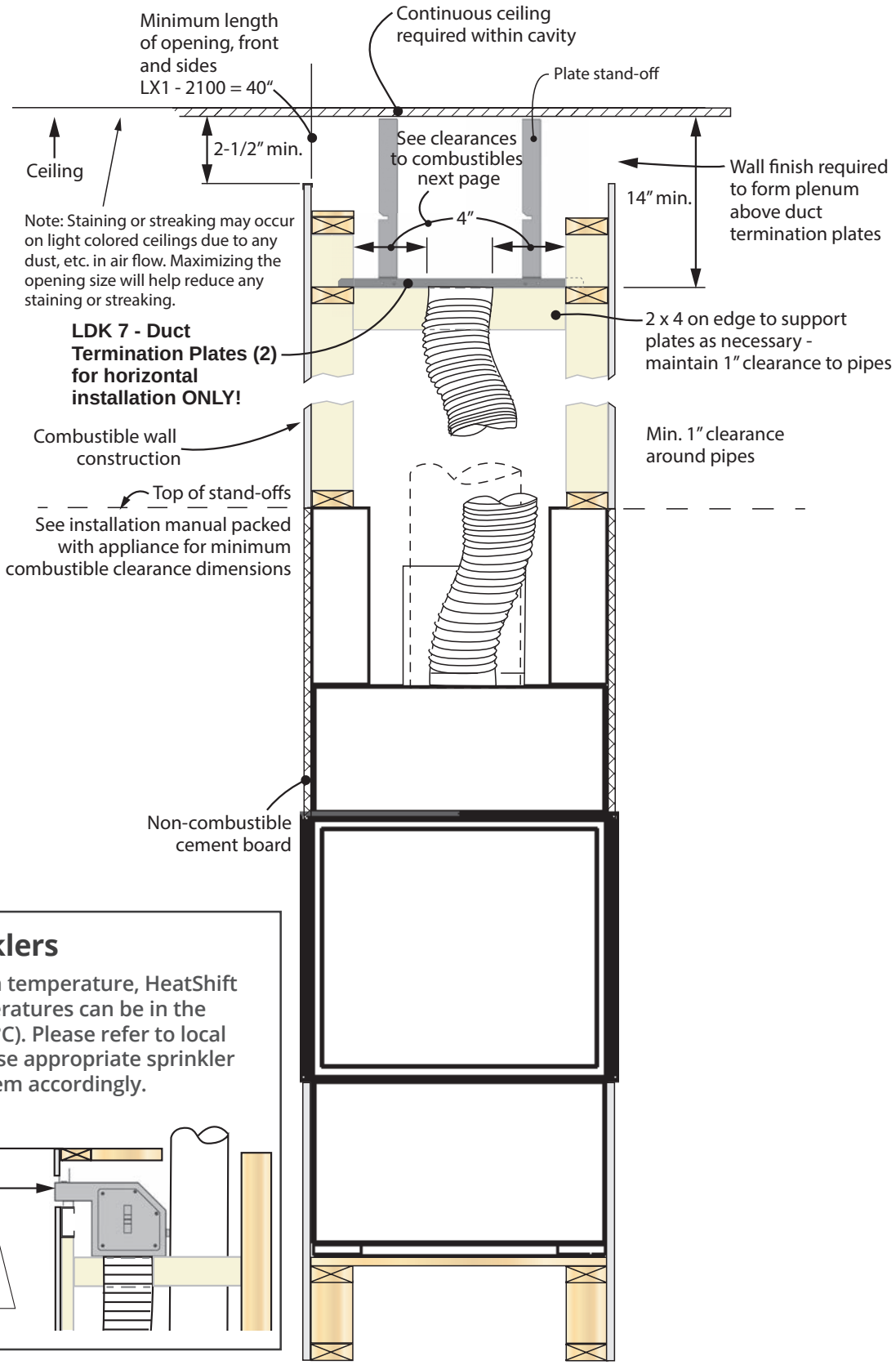

NOTE—Sprinklers

Depending on room temperature, HeatShift air discharge temperatures can be in the range of 210 °F (99 °C). Please refer to local building code, choose appropriate sprinkler heads and place them accordingly.

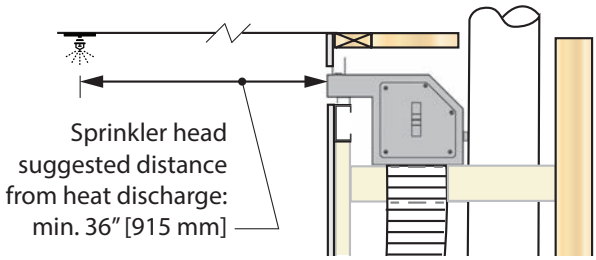

Appendix D - HeatShift

LDK7 Clearances to Combustibles

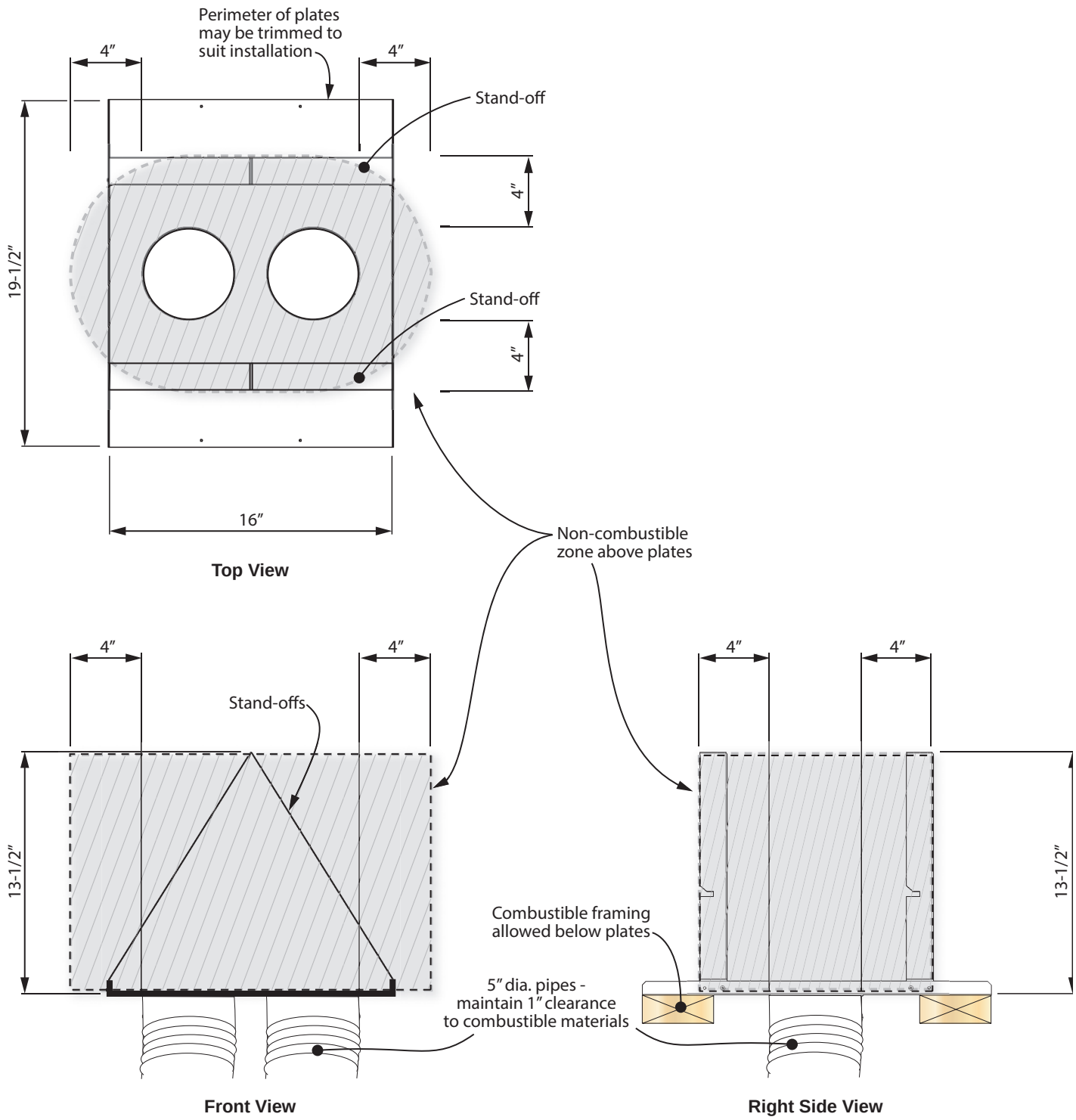

Appendix D - HeatShift

⚠ WARNING

All FOUR (4) takeoffs MUST BE CONNECTED TO PLENUM(S).

Install Plenum Kits (LDK3, LDK4, LDK9)

1. Install all four collars onto the top of the appliance (6 screws each).

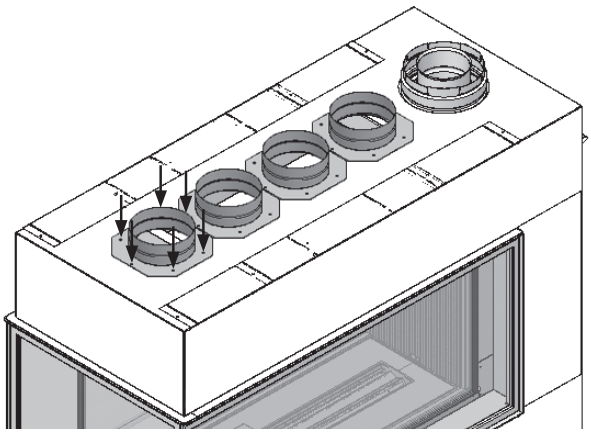

2. Frame a rough opening at the desired location—see earlier sections of this manual for allowable plenum positions and rough frame opening sizes.
3. Install top mounting bracket(s) to the plenum using screws provided (use the short sheet metal screws provided otherwise the screw tails (ends) will interfere with the finishing frame when installed).

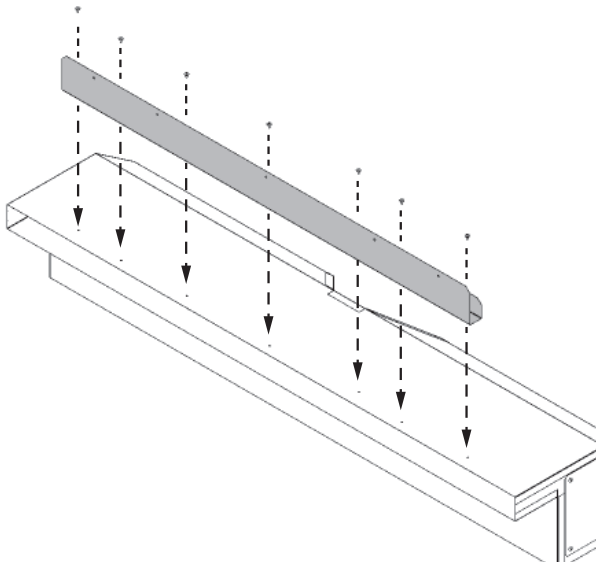

4. Install the plenum(s) into the rough frame opening maintaining minimum clearances to combustibles as previously listed. Fix the plenum to the framing using nails or screws through the top mounting bracket. **Note that the mounting brackets are not intended to carry the weight of the plenum and pipes. Provide support to the underside of the plenum and ensure the plenum is level and its outlet is not distorted.** Use metal strapping (all-round, not supplied) as required to further secure the plenum to framing.
5. Attach one section of UL-181, Class 1 approved air duct to each of the collars and secure it with gear clamps provided. **DO NOT SPLICE DUCTS!**
6. Attach the top of the pipe sections to the plenum securing them with the gear clamps provided. An upward slope must be maintained in horizontal sections of pipes for proper convection. Use straps as necessary to maintain the pipes positions. Support horizontal sections every 24 inches.
7. Paint the inside surfaces of the plenum using high-temperature flat black spray paint for installations where the inside of the plenums may be visible. **Note:** The flanges of the white finishing frame (when used) will insert approximately 1-1/4" into the plenum covering the shiny sheet metal.
8. Install the finishing frame or louver to the plenum after the wall finish is completed:
   LDK4: Use the LDK5. **LDK9:** Use the LDK10.

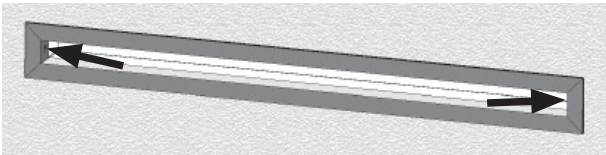

   LDK3: Use the grilles provided with the kit.

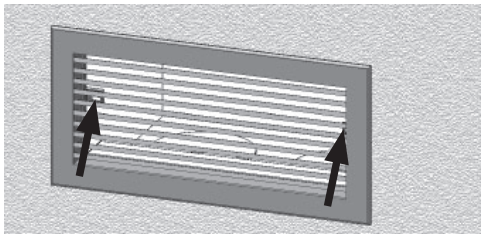

   Note: The frame/louver are finished white but may be painted another color if desired; use high temperature paint (250°F). You may also finish up to the perimeter of the plenum opening with your material of choice and not use the frame or louver. Do not finish over any of the opening in the plenum outlet.
9. Continue with the fireplace installation.

Appendix D - HeatShift

⚠ WARNING

All FOUR (4) takeoffs MUST BE CONNECTED TO PLENUM(S).

Install Duct Termination Plates (LKD7)

1. Install all four collars onto the top of the appliance (6 screws each).

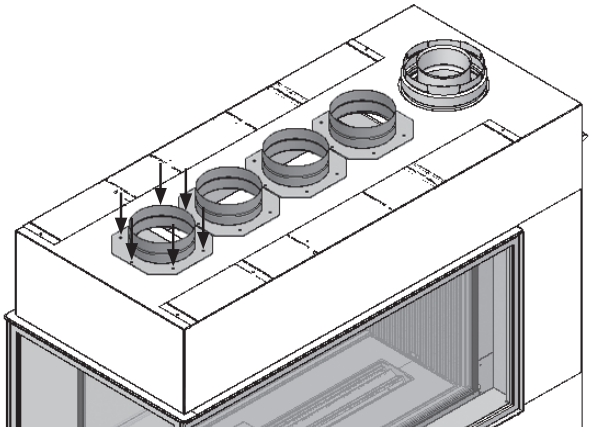

2. Frame a rough opening and platform at the desired location—see earlier sections of this manual for allowable duct termination plates positions and rough frame opening sizes.
3. On each duct termination plate, rotate both standoffs to the vertical position and secure in place using screws provided.

2 stand-offs per plate

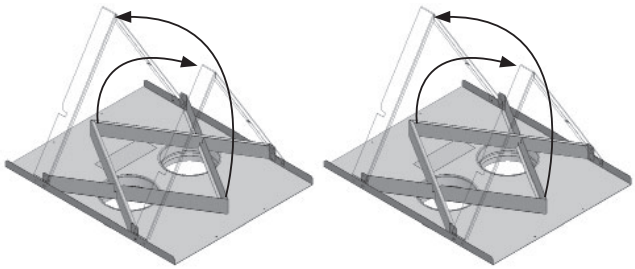

4. Install the termination plates into the framing ensuring collars/pipes on underside of plates maintain 1 inch clearance to combustibles and clearance to combustible above the plates are maintained as listed in preceeding pages.
   The termination plates perimeter may be trimmed as necessary to accommodate framing. Secure the termination plate to framing using screws or nails to avoid movement.
5. Attach one section of UL-181, Class 1 approved air duct to each of the collars and secure it with gear clamps provided. **DO NOT SPLICE DUCTS!**
6. Attach the top of the pipe sections to the duct termination plates securing them with the gear clamps provided. An upward slope must be maintained in horizontal sections of pipes for proper convection. Use straps as necessary to maintain the pipes positions. Support horizontal sections every 24 inches.
7. Continue with the fireplace installation.

Repair Parts List

	Description	Part no.
2100HSC	2100 HeatShift Canopy Kit	
	Canopy with collars	4007699
	Drywall frame support	4007689
	Support brackets (2)	4007690
	Middle duct	4007691
	Back cover plate	4007695
	Top duct with collars	4007698
	#8 x 1/2" S/T screws (29)	4004560
LDK3	14" Double Hot Air Plenums Kit	
	14" x 6" double plenums (2)	4005464
	5" take-off collars (4)	4005478
	DABL-00-C-SPL 14" x 6" Grilles white (2)	4005614
	Top mounting bracket/standoffs (2)	4005566
	#8 slotted drive screws 1/4" (6)	798601
LDK4	38" Quad Hot Air Plenum Kit	
	38" x 2" quad plenum	4005477
	5" take-off collars (4)	4005478
	Top mounting bracket/standoffs	4007213
	#8 slotted drive screws 1/4" (7)	798601
LDK5	38" Outlet Frame Kit for LDK4	
	Aux Frame-SPL 38" x 2" white	4005613
LDK6	5" Aluminum 2-ply Flex Kit	
	5" dia 10' (uncompressed) aluminum chimney liners (2)	4005635
	4.5" - 6.5" ss gear clamps (8)	4005642
LDK7	Duct Termination Plates	
	Plate and collar assembly (2)	4006747
	5" take-off collars (4)	4005478
	Screws 8 x 3/8 tap PN HD PH (12)	100A757
LDK9	30" Quad Hot Air Plenum Kit	
	30" x 2" quad plenum	4007903
	5" take-off collars (4)	4005478
	Top mounting bracket/standoff	4007601
	#8 slotted drive screws 1/4" (5)	798601
LDK10	30" Outlet Frame Kit for LDK9	
	Aux Frame-SPL 30" x 2" white	4007951

Each kit is sold separately.

Appendix E - Spare Parts

	Description	Part Number
1	Barrier screen front/rear (2)	4006979
2	Barrier screen end	4006865
3	Window assembly front/rear (2)	4006727S
4	Window assembly end	4006469S
5	Front window retainer assembly (4)	4007297
6	Window seal silicone (4)	4005846
7	End window clamp	4006714
8	Bottom plate assembly left	4006970
9	Bottom plate assembly right	4006973
10	Upper plate assembly left	4006976
11	Upper plate assembly right	4006978
12	Vertical plate assembly left	4006962
13	Vertical plate assembly right	4006965
14	Media tray left	4006604AH
15	Media tray right	4006603AH
16	Wire cover	4006845AH
17	Electrical passage gasket	4006274
18	Burner assembly	4006731AH
19	Exhaust restrictor	4006467
20	Rope gasket (2)	4007433
21	Light rail left	4006609AH
22	Light rail right	4006610AH
23	Bi-pin halogen bulb GY.635 20 W (4)	4005700
24	Hot glass warning plate	4003093
25	Pilot cover	4005940AH
26	Window handle tool	4006269BY
27	Liner retaining clip (lower)	4007588AH
28	Burner module assy - natural gas	4006843S
	Burner module assy - propane gas	4006844S
29	Pilot assembly - natural gas	4006738S
	Pilot assembly - propane gas	4006739S
29a	Pilot plug	4000726
30	Thermocouple	4000061
31	Pilot injector #51 - natural gas	4000727
	Pilot injector #30 - propane gas	4000728
32	Pilot tube	4000732
33	Pilot hood 2-flame	4000730
34	Extended nut	4001855
35	Electrode	4001856
36	Gas orifice DMS #42 - natural gas	4007000-42
	Gas orifice DMS #53 - propane	4007000-53
37	Pilot gaskets (2)	4000715
38	Pilot stand	4006649

	Description	Part Number
39	Air shutter	4006594
40	Pivot bracket	4006583
41	Module tray gasket - long (2)	4006256
42	Module tray gasket - short (2)	4006257
43	Block/pipe connector	4006689
44	Gas supply line	4006688
45	3/8" Flex line (10" length) c/w flare to flare fittings	4000345
46	GV60 valve, no connector	4000873
46a	By-pass screw # 185 (natural gas)	4000300
	By-pass screw # 125 (propane gas)	4000810
46b	Straight connector	220K891
46c	Inlet elbow 1/2" tube x 3/8"	4002909
47	Thermocurrent interruptor	4001037
48	Connector 3/8NPT x 5/16 flare	220K891
49	V-Module	4002530
50	Receiver Valor 10 Two Way	4005597
51	Wire harness GV60	4001187
52	Yellow cable to interruptor	4002096
53	Red cable to interruptor	4001035
54	Ignition cable sleeve	4002244
55	Ignition cable 500 mm	4001039
56	Valve mounting bracket	4006102
57	Remote Battery and Wall Switch Kit	RBWSKX
58	Junction box	4005527
59	Cover plate and 4 screws	4005526
60	Battery holder	4006553
61	Cable tie	4005524
62	Wire harness assembly 10.6 m	4005523
63	Plate with magnets	4005391
64	Long screws (4)	4001444
65	Touch control wall switch & 2 screws	4005522
66	Battery cover assembly	4005390
67	Valor 10 handset wall holder	4004459
68	Valor 10 handset black	4007548
69	GV60 valve repair kit (not included)	4004544
70	Reflective glass panel liner	2100RGP
71	Fluted black liner	2200FBP
72	Decorative glass Murano set	2100DGM
73	Murano glass rear	4006858
74	Murano glass front	4006857
75	Bag of 1/4" ceramic pads (8 per bag)	4006367
76	1/2" clear fireglass (1.6 kg bag)	4004521

Appendix E - Spare Parts

	Description	Part Number
77	Birchwood log kit	2100BLK
78	Birch log L4	4007374
79	Birch log L3	4007373
80	Birch log L6	4007376
81	Birch log L12	4007382
82	Birch log L9	4007379
83	Birch log L8	4007378
84	Birch log L1	4007371
85	Ceramic log support (2)	4007649
86	Bag of mixed embers	4007782
87	Bag of splinters	4005813
88	Driftwood log kit	2100DWK
89	Driftwood log 2965	4002965
90	Driftwood log 2967	4002967
91	Driftwood log 3720	4003720
92	Driftwood log 2939	4002939
93	Driftwood log 2966	4002966
94	Bag of vermiculite (5.5 cups)	4002940
95	Brown beach pebble	4003082
96	Grey beach pebble	4003083
97	White beach pebble	4003084
98	Black beach pebble	4003085
99	Small grey beach pebble	4003086
100	Beige beach pebble (2)	4003087
101	Rock and shale kit	2100RSS
102	Bag of grey/black shale (1 lb)	4004792
103	RH twig (long, 2)	4001828
104	LH twig (short, 2)	4001827S
105	Grey rock S4-A (6)	4002338
106	Dark grey rock S4-A (4)	4002339
107	Grey rock S4-B (4)	4002340
108	Dark grey rock S4-B (6)	4002341
109	9 grey 5 matte rock (2)	4002652
110	11 grey 3 matte rock (2)	4002654

Appendix E - Spare Parts

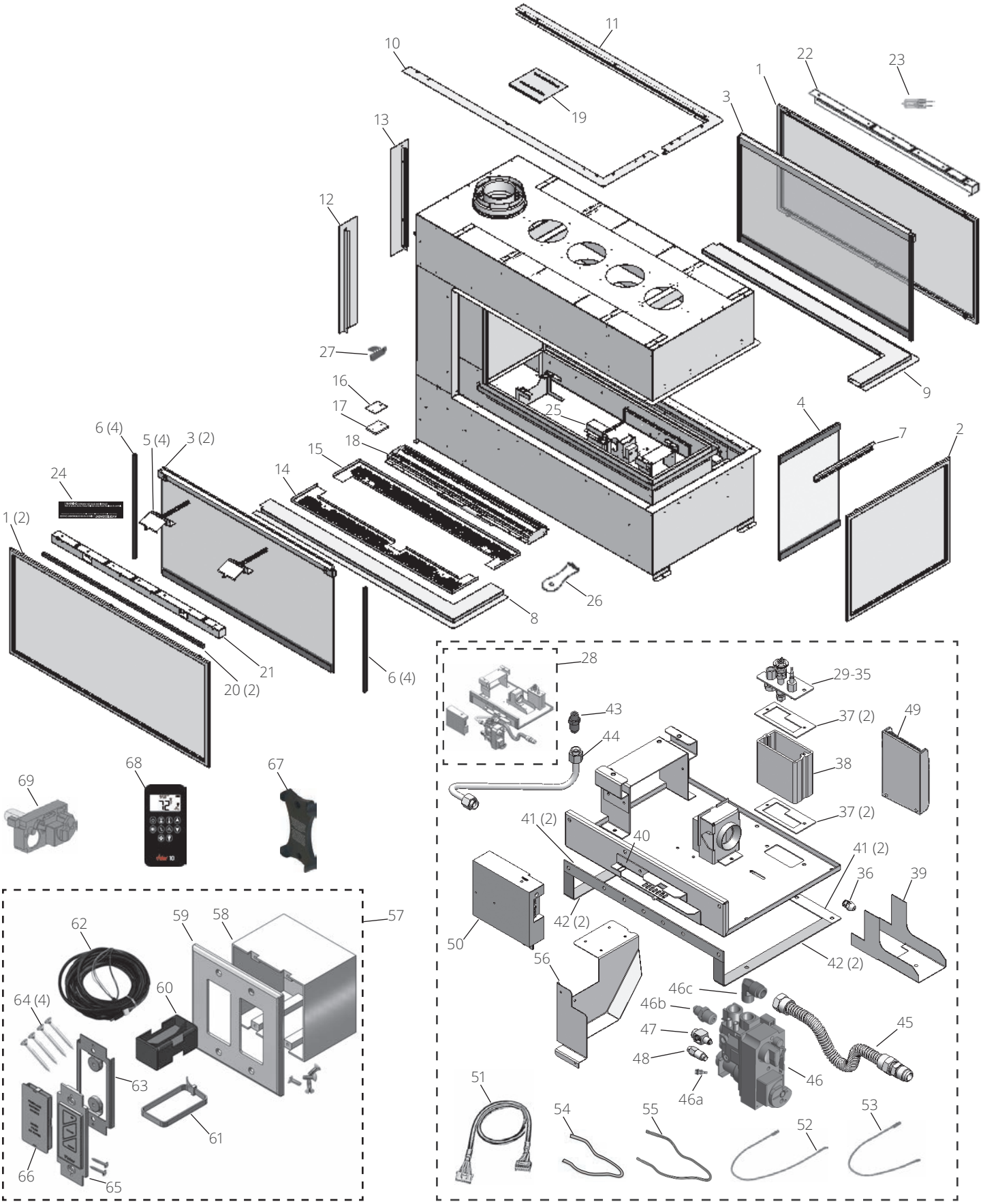
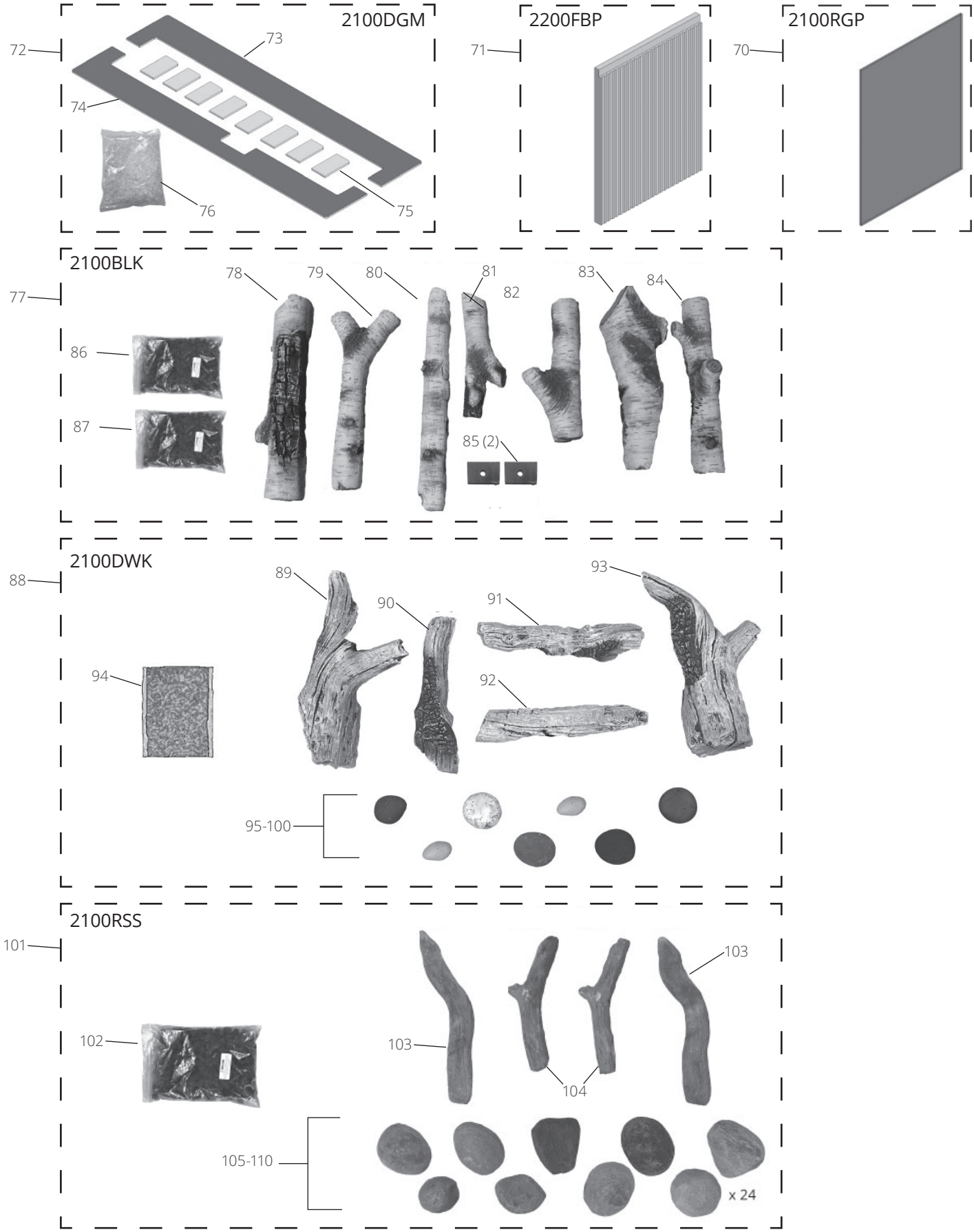
Appendix E - Spare Parts