Installation Manual

LX2

Direct Vent Zero Clearance
Gas Fireplace
natural gas 2200LKN / 2200RKN
propane gas 2200LKP / 2200RKP
CORNER

with HeatShift™

Installer: Place model/serial number here.

Installer: Leave this manual with the appliance.
Consumer: Retain this manual for future reference.

⚠ WARNING:
FIRE OR EXPLOSION HAZARD
Failure to follow safety warnings exactly could result in serious injury, death, or property damage.

Do not store or use gasoline or other flammable vapors and liquids in the vicinity of this or any other appliance.

WHAT TO DO IF YOU SMELL GAS

- **Do not try to light any appliance.**
- **Do not touch any electrical switch; do not use any phone in your building.**
- **Leave the building immediately.**
- **Immediately call your gas supplier from a neighbor's phone. Follow the gas supplier's instructions.**
- **If you cannot reach your gas supplier, call the fire department.**

Installation and service must be performed by a qualified installer, service agency or the gas supplier.

⚠ DANGER

Hot glass will cause burns.

Do not touch glass until cooled.

Never allow children to touch glass.

A barrier designed to reduce the risk of burns from the hot viewing glass is provided with this appliance and must be installed for the protection of children and other at-risk individuals.

4007769-19

This appliance may be installed in an after-market permanently located, manufactured (mobile) home where not prohibited by local codes. This appliance is only for use with the type of gas indicated on the rating plate. This appliance is not convertible for use with other gases, unless a certified kit is used.

INSTALLER: Leave this manual with the appliance.

CONSUMER: Retain this manual for future reference.

Massachusetts:

The piping and final gas connection must be performed by a licensed plumber or gas fitter in the State of Massachusetts. Also, see Carbon Monoxide Detector requirements on page 56 of this manual.

⚠ WARNING

This product can expose you to chemicals including Benzene, which is known to the State of California to cause cancer and birth defects or other reproductive harm. For more information go to www.P65Warnings.ca.gov.

Note: Natural gas, in its original state, contains Benzene.

This appliance is a domestic room-heating appliance. It must not be used for any other purposes such as drying clothes, etc.

This appliance is suitable for installation in a bedroom or bed sitting room.

Ce guide est disponible en français sur demande.

NATIONAL FIREPLACE INSTITUTE NFI ADVOCATE

We recommend a US Certified National Fireplace Institute (NFI) specialist install our gas hearth products.

DESIGN CERTIFIED

CERTIFIED

The information contained in this manual is believed to be correct at the time of printing. Miles Industries Ltd. reserves the right to change or modify any information or specifications without notice. Miles Industries Ltd. grants no warranty, implied or stated, for the installation or maintenance of your heater, and assumes no responsibility for any consequential damage(s).

© Copyright Miles Industries Ltd., 2026. All rights reserved.
Designed and manufactured for Miles Industries Ltd.

Valor Fireplaces
190–2255 Dollarton Highway
North Vancouver, BC, Canada V7H 3B1
T 604.984.3496 F 604.984.0246
valorfireplaces.com

Welcome to Valor®

This appliance has been professionally installed by:
Dealer Name: _____
Phone:_____

Please read this manual BEFORE installing and operating this appliance.

Fireplace Safety 4
Specifications 6
Kits & Accessories 7
Approved Venting Components 8
Dimensions & Location 10
Planning 11
- Overview 12
- Clearances—Combustible Projections 13
- Clearances—Alcove 14
- Minimum Vertical Vent—6-5/8" Vent 15
- Minimum Vertical Vent—8" Vent 16
- Framing—Minimal 17
- Framing—Extended 18
- Wall Finish 19

Venting 21
- Overview 21
- Typical Components 22
- Venting Chart—4" x 6-5/8" 23
- Venting Chart—5" x 8" 24
- Restrictors 25
- Wall Termination 26
- Roof Termination 27

Preparation 28
- Window Sill & Window 28
- Standoffs & Adapter 29

Installation 30
- Electrical Wiring 30
- Gas Supply 31
- Remote Battery & Wall Switch Kit 33
- Liners 35
- Fuel Beds 37
  - Birch Kit 1705BLKV2 37
  - Driftwood Kit 1705DWKV2 40
  - Decorative Glass Murano 2200DGM 43
  - Splitwood Kit 1705SWKV2 44
  - Rocks & Shale Set 1714RSS 46
- Replacing Light Bulbs 48
- Window Re-Installation 49
- Remote Control Set-Up 51
- Check Operation 53
- Barrier Screen & Window Sill 54

Wiring Diagram 55
Commonwealth of Massachusetts 56
Appendix A - Lighting Instructions Plate 58
Appendix B - Remote Control Operation 59
Appendix C - Wall Switch Operation 66
Appendix D - HeatShift System 67
Appendix E - Spare Parts 84

Fireplace Safety

This manual contains very important information about the safe installation and operation of the fireplace. Read and understand all instructions carefully before installing and operating the fireplace. Failure to follow these instructions may result in possible fire hazard and will void the warranty.

Replacement manuals are available by contacting the Valor Customer Service at 1-800-468-2567, or by visiting valorfireplaces.com.

⚠ WARNING: Extremely Hot!

Heat and flammability

- Some parts of the fireplace are extremely hot, particularly the glass windows. Use the barrier screens provided or a gate to reduce the risk of severe burns.
- The glass windows can exceed 500°F at full capacity.
- Always keep the appliance clear and free from combustible materials, gasoline, and other flammable vapors and liquids.
- Be aware of hot wall surfaces! The walls directly above the fireplace can get very hot when the fireplace heats. Although safe, it may reach temperatures in excess of 200°F (93°C) depending on choice of optional accessories. Do not touch!
- Be aware of hot hearth/floor surfaces! Any projections directly around the fireplace can get very hot when the fireplace heats. Although safe, they may reach temperatures in excess of 200°F (93°C)depending on elevation of hearth. Be careful of touching these! Temperature of projection surfaces will be reduced when barrier screens are installed.
- Some materials or items, although safe, may discolor, shrink, warp, crack, peel, and so on because of the heat produced by the fireplace. Avoid placing candles, paintings, photos and other combustible objects sensitive to heat or furniture within 36 inches (0.9 m) around the fireplace.
- Due to it high temperatures, the appliance should be located out of traffic areas and away from furniture and draperies.
- Clothing or flammable material should not be placed on or near the appliance.

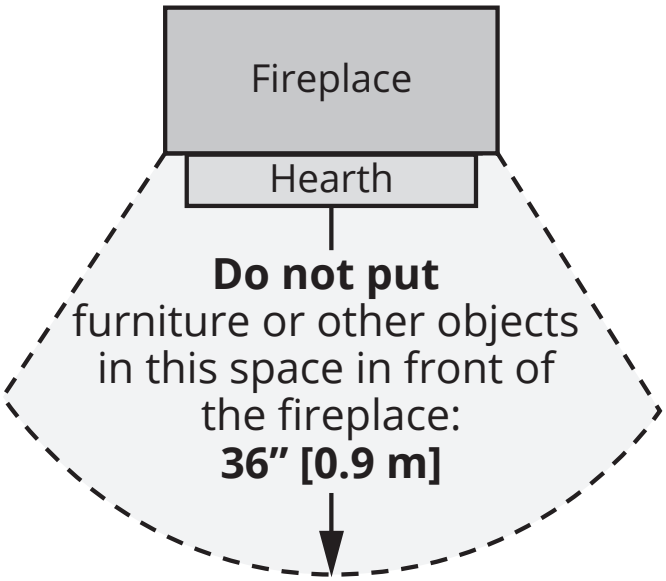

Barrier Screen and Safety

- A barrier designed to reduce the risk of burns from the hot viewing glass is provided with this appliance and shall be installed for the protection of children and other at-risk individuals.
- Children and adults should be alerted to the hazards of high surface temperature and should stay away to avoid burns or clothing ignition.
- Young children should be carefully supervised when they are in the same room as the appliance. Toddlers, young children, and others may be susceptible to accidental contact burns. A physical barrier is recommended if there are at-risk individuals in the house. To restrict access to a fireplace or stove, install an adjustable safety gate to keep toddlers, young children, and other at-risk individuals out of the room and away from hot surfaces.
- Any safety screen, guard, or barrier removed for servicing an appliance must be replaced prior to operating the appliance.

Fireplace Safety

Glass windows

WARNING

Do not operate this appliance with the glass front removed, cracked, or broken.

Do not strike or slam the glass front.

Replacement of the glass front should be performed by a licensed or qualified service person.

- The glass front assemblies must be in place and sealed before the unit can be placed into safe operation.
- The glass front assemblies must only be replaced as complete units, as supplied by the fireplace manufacturer. No substitute material may be used.
- Do not use abrasive cleaners on the glass front assemblies. Do not attempt to clean the glass when it is hot.

Venting

- This unit must be used with a vent system as described in this manual. No other vent system or components may be used.
- Never obstruct the flow of combustion and ventilation air. Keep the front of the appliance clear of all obstacles and materials for servicing and proper operation.
- This gas fireplace and vent assembly must be vented directly to the outside and must never be attached to a chimney serving a separate solid fuel burning appliance. Each gas appliance must use a separate vent system. Common vent systems are prohibited.

Intended use

- This appliance is designed and approved as a supplemental heater and provides the potential for most energy conservation when used while attended. The use of an alternate primary heat source is advisable.
- This unit is not for use with solid fuel.
- Do not use this heater as a temporary source of heat during construction.

Installation and Servicing

- Installation and repair should be done by a qualified service person. The appliance should be inspected before use and at least annually by a professional service person. More frequent cleaning might be required due to excessive lint from carpeting, bedding material, et cetera. It is imperative that control compartments, burners, and circulating air passageways of the appliance be kept clean.
- Do not use this appliance is any part has been under water. Immediately call a qualified service technician to inspect the appliance and to replace any part of the control system and any gas control that has been under water.

WARNING

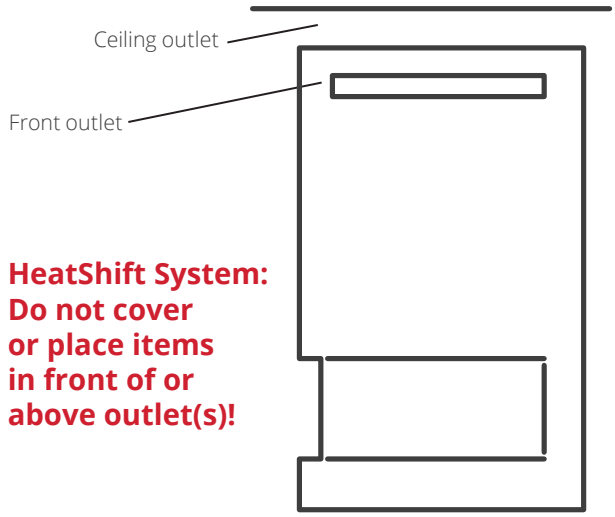

HeatShift System: Do not cover or place items in front of or above outlet(s)!

Specifications

Approval & Codes

This appliance is certified to ANSI Z21.88/CSA 2.33 American National Standard / CSA Standard for Vented Gas Fireplace Heaters for use in Canada and USA, and to CGA 2.17-91 High Altitude Standard in Canada. This appliance is for direct vent installations.

This appliance complies with CSA P.4.1-15 Testing method for measuring annual fireplace efficiencies.

The installation must conform to local codes or, in the absence of local codes, with the National Fuel Gas Code, ANSI Z223.1/NFPA 54 or the Natural Gas and Propane Installation Code CAN/CGA-B149.1. Only qualified licensed or trained personnel should install this appliance.

This appliance must be electrically grounded in accordance with local codes, or, in the absence of local codes, with the National Electrical Code, ANSI/NFPA 70 or the Canadian Electrical Code, CSA C22.1.

Ratings

Model	KN	KP
Gas	Natural	Propane
Altitude (Ft.)*	0-4,500 feet*	
Input Maximum (Btu/h)	36,000	36,000
Input Minimum (Btu/h)	19,000	21,000
Manifold Pressure (in w.c.)	3.7″	9.0″
Minimum Supply Pressure (in w.c.)	5″	11″
Maximum Supply Pressure (in w.c.)	10″	14″
Main Burner Injector Marking	DMS#32	DMS#49
Pilot Injector Marking	51	30
Min. Rate By-Pass Screw	220	160

*High Altitude Installations

Input ratings are shown in BTU per hour and are certified without deration for elevations up to 4,500 feet (1,370 m) above sea level.

For elevations above 4,500 feet (1,370 m) in USA, installations must be in accordance with the current ANSI Z223.1 and/or local codes having jurisdiction. Heating value of gas in some areas is reduced to compensate for elevation—consult your local gas utility to confirm.

For installations at elevations above 4,500 feet (1,370 m) in Canada, please consult provincial and/or local authorities having jurisdiction.

Supply Gas

Heater engines 2200LKN / 2200RKN are used with natural gas.

Heater engines 2200LKP / 2200RKP are used with propane gas.

The supply pressure must be between the limits shown in the Ratings section.

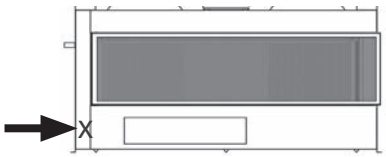

The supply connection is 1/2″ NPT male and located on the on the rear left side of the firebox. A shut-off valve (supplied) is required on the supply line to isolate the unit during service. See *Gas Supply* on page 31 section for details.

Conversion Kits

The 2200K LX2 is supplied as natural gas or propane gas and is field convertible between fuels. See instructions packaged with the conversion kits for further information.

Electrical

The 2200K is designed to run on battery power and does not require an electrical power source to operate as a heater. However, it requires electrical power to operate the decorative lighting and the optional WiFi.

⚠ WARNING

NO electrical connections allowed for any outdoor installation.

HeatShift® System Required

The 2200 fireplace **MUST** be installed with HeatShift, a convection system that redistributes the warm air flow away from the fireplace opening to a more desirable location using natural convection, without use of a fan.

The warm air flow may be relocated to a position higher up the wall, out the sidewalls, or even to another room. The result is much cooler wall temperatures above the fireplace opening for locating television, artwork, etc. Refer to *Appendix D - HeatShift System* pages 67 –82 of this manual.

Outdoor Conversion Kit

The 2200K models are supplied standard for indoor applications and may be adapted for installation in specific “outdoor” applications protected from weather as defined in the GV60CKO outdoor conversion kit manual.

Kits & Accessories

Required Kits

4006797	LX2 Barrier Screen—Front panel
4006888	LX2 Barrier Screen—Side panel
Fuel Beds (choose one)	
1705BLKV2	Birch Log Kit
1705DWKV2	Driftwood Set Kit
2200DGM	Murano Glass Set
1705SWKV2	Splitwood Kit
1700RSS	Rocks & Shale Set
Liners + Liner End Panel (choose one)	
2200FBL + 2200FBP	Fluted Black Liners + Fluted End Panel
2200RGL + 2200RGP	Reflective Glass Liners + Reflective Glass End Panel
HeatShift®	
LDK1	Quad Plenum 48”
LDK3	Double Plenum 14” (2) with Grille
LDK4	Quad Plenum 38”
LDK7	Duct Termination Plates (valance outlet)
LDK9	Quad Plenum 30”
Approved Venting Components	
See next pages for list of Approved Venting Components.	

WARNING

The HeatShift System MUST be installed on this appliance!

Information accurate at the time of printing and subject to change without notice.

Optional Accessories

Gas Conversion Kits	
2200XPGK	Conversion to propane gas
2200XNGK	Conversion to natural gas
Other Accessories	
LDK2	48” Finishing Frame for LDK1
LDK5	38” Finishing Frame for LDK4
LDK6	5” dia. Aluminum 2-ply Flex Kit—2 x 10’ lengths, may be cut to required length
LDK10	30” Finishing Frame for LDK9
2200SFK	Steel Framing Kit
1270RBK*	HeatSplit Remote Blower Kit (with LDK1 or LDK4 ONLY)
GV60CKO*	Outdoor Fireplace Conversion Kit
GV60WIFI*	Wi-Fi Module
Hearth Gate	Hearth gates such as Cardinal’s VersaGate are available at retail stores carrying safety products for children.

WARNING

*** NO electrical connections allowed for any outdoor installation.**

Approved Venting Components

Approved Direct Vent Suppliers - Valor Models 2200								
Venting Parts Description			Venting Parts Code / availability by Manufacturer					
			DURA-VENT 4 x 6-5/8”	DURA-VENT 5 x 8”	SELKIRK	ICC EXCEL DIRECT	MILES INDUSTRIES	BDM
Termination Caps	Horizontal	Standard Co-axial	46DVA-HC	58DVA-HC	4DT-AHC	TM-4HT	658DVK2	DVR6-HC
		Deluxe Co-axial	—	—	—	TM-RHT	—	DVR6-HCP
		High Wind Co-axial	—	—	—	—	—	—
	Vertical	Standard Co-axial	46DVA-VC	58DVA-VC	4DT-VT	—	—	DVR6-VCH DVR6-VCSB —
		High Wind Co-axial	46DVA-VCH	58DVA-VCH	—	TM4-SVT	—	—
		Extended Co-axial	46DVA-VCE	58DVA-VCE	—	—	—	—
	Snorkel, 14” Rise		—	—	4DT-ST14	TM-4ST14	—	DVR6-SNK14
	Snorkel, 36” Rise		—	—	4DT-ST36	TM-4ST36	—	DVR6-SNK36
Adjustable Pipe Length and Pipe Extensions 4” x 6-5/8”		Galvanized or Black	46DVA-08A 46DVA-08AB (3” to 7”)	—	—	—	—	DVR6-08A DVR6-08AB
		Galvanized or Black	46DVA-16A 46DVA-16AB (3” to 14-1/2”)	—	—	TC-4DLS1 TC-4DLS1B	—	DVR6-16A DVR6-16AB
		Galvanized or Black	46DVA-17TA 46DVA-17TAB (11” to 17”)	—	—	TC-4DLS2 TC-4DLS2B (1-7/8” - 21”)	—	—
		Galvanized or Black	46DVA-24TA 46DVA-24TAB (17” to 24”)	—	—	TC-4DLA30 TC-4DLA30B (16.5”-29”)	—	—
		Coaxial Flex	46DVA-36FF 46DVA-60FF 46DVA-120FF	—	—	—	—	—
DV Elbows	30°	Galvanized	46DVA-E30	58DVA-E30	—	—	—	
	45°	Galvanized	46DVA-E45 (swivel)	58DVA-E45 (swivel)	4DT-EL45	TE-4DE45	—	DVR6-E45
		Black	46DVA-E45B (swivel)	58DVA-E45B (swivel)	4DT-EL45(B)	TE-4DE45B	—	DVR6-E45B
	60°	Galvanized	46DVA-E60	58DVA-E60	—	—	—	—
	90°	Galvanized	46DVA-E90 (swivel)	58DVA-E90 (swivel)	4DT-EL90	TE-4DE90	—	DVR6-E90
		Black	46DAV-E90B (swivel)	58DAV-E90B (swivel)	4DT-EL90(B)	TE-4DE90B	—	DVR6-E90B

Approved Venting Components

Venting Parts Description			Venting Parts Code / availability by Manufacturer					
			DURA-VENT 4 x 6-5/8”	DURA-VENT 5 x 8”	SELKIRK	ICC EXCEL DIRECT	MILES INDUSTRIES	BDM
Pipes	6” long	Galvanized	46DVA-06	58DVA-06	4DT-06	TC-4DL6	—	DVR6-06
		Black	46DVA-06B	58DVA-06B	4DT-06(B)	TC-4DL6B		DVR6-06B
	7” long	Galvanized	—	—	—	—	—	—
		Black						
	9” long	Galvanized	46DVA-09	58DVA-09	4DT-09	TC-4DL9 TC-4DL9B	—	DVR6-09
		Black	46DVA-09B	58DVA-09B	4DT-09(B)			DVR6-09B
	12” long	Galvanized	46DVA-12	58DVA-12	4DT-12	TC-4DL1	—	DVR6-12
		Black	46DVA-12B	58DVA-12B	4DT-12(B)	TC-4DL1B		DVR6-12B
	18” long	Galvanized	46DVA-18	58DVA-18	4DT-18	—	—	DVR6-18
		Black	46DVA-18B	58DVA-18B	4DT-18(B)			DVR6-18B
	24” long	Galvanized	46DVA-24	58DVA-24	4DT-24	TC-4DL2	—	DVR6-24
		Black	46DVA-24B	58DVA-24B	4DT-24(B)	TC-4DL2B		DVR6-24B
	36” long	Galvanized	46DVA-36	58DVA-36	4DT-36	TC-4DL3 TC-4DL3B	—	DVR6-36
		Black	46DVA-36B	58DVA-36B	4DT-36(B)			DVR6-36B
	48” long	Galvanized	46DVA-48	58DVA-48	4DT-48	TC-4DL4	—	DVR6-48
		Black	46DVA-48B	58DVA-48B	4DT-48(B)	TC-4DL4B		DVR6-48B
Flashings	Roof Flashing 0/12-6/12		46DVA-F6	58DVA-F6	4DT-AF6	TF-4FA	—	DVR6-AF012
	Roof Flashing 7/12-12/12		46DVA-F12	58DVA-F12	4DT-AF12	TF-4FB	—	DVR6-AF712
	Flat Roof Flashing		46DVA-FF	58DVA-FF	—	TF-4F	—	DVR6-TCF
	Masonry Flashing		—	—	—	TF-4MF	—	—
	New Siding Flashing		—	—	—	—	658NSFK	—
Various Venting System Parts	Wall Thimble		46DVA-WT	58DVA-WT	4DT-WT1	TM-4WT	—	DVR6-WTU
	Storm Collar		46DVA-SC	58DVA-SC	4DT-SC	TM-SC	—	DVT68-SC
	Decorative Plate		46DVA-DC	58DVA-DC	—	TM-4TR TM-4TP	—	DVR6-DC
	Ceiling Support	Cathedral	46DVA-CS	58DVA-CS	4DT-CCS	TM-4SS	—	DVR6-CS
		Regular	—	—	4DT-CS	—	—	—
	Ceiling Firestop		46DVA-FS	58DVA-FS	4DT-FS	TM-4RDS TM-CS	—	DVR6-CFS
	Attic Radiation Shield / Firestop		—	—	—	TM-4AS	—	DVR6-AIS
	Wall Strap		46DVA-WS	58DVA-WS	4DT-WSB	TM-WS	—	DVR6-WS
	Vinyl Siding Standoff		46DVA-VSS	58DVA-VSS	4DT-VSS (before siding) 4DT-VSSB (after siding)	TM-VSS	—	DVR6-VSS
	Elbow Strap / Offset Support		46DVA-ES	58DVA-ES	4DT-OS	TM-OS	—	DVR6-ES
	Terminal Guard		46DVA-WG	58DVA-WG	—	TM-HTS TM-RHTS	845TG 658TG	DVR6-SHRD

Notes:
1. Follow instructions supplied with each manufacturer’s components.
2. **Unless otherwise specified, all the parts and assemblies from the above table are to be used with 4” x 6-5/8” pipes.**
3. **Do not mix components from different vent manufacturers, except Miles Industries’ components, certified to use with other manufacturers’.**

Dimensions & Location

Dimensions—Corner Right Appliance Shown

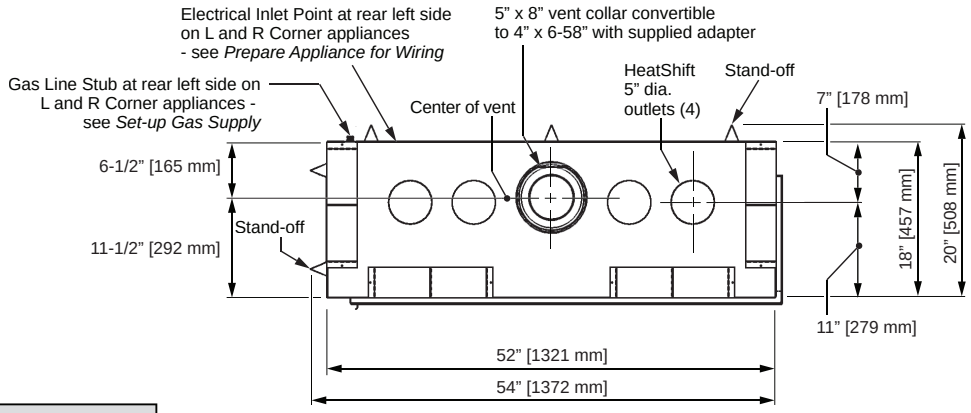

Top View

Gas Line Stub & Electrical Inlet Point at rear, on left side for both L and R corner appliances

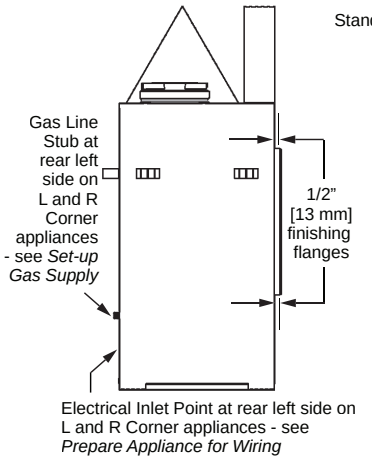

Left Side View

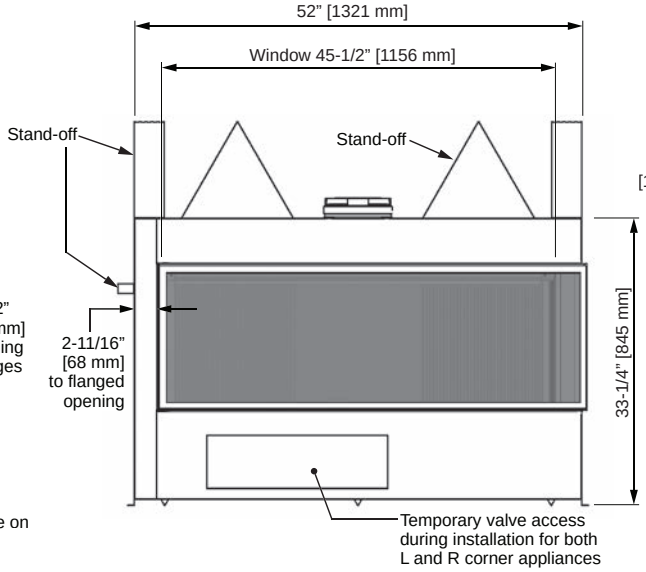

Front View

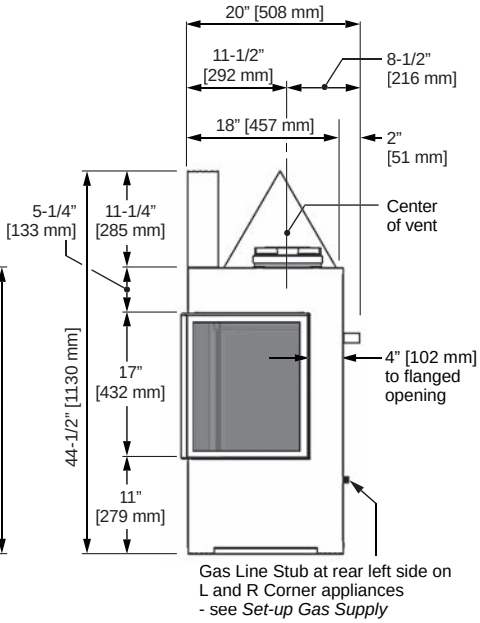

Right Side View

Location—Corner Right Appliance Shown

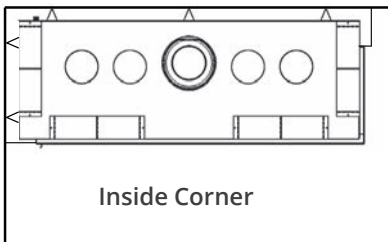

Inside Corner

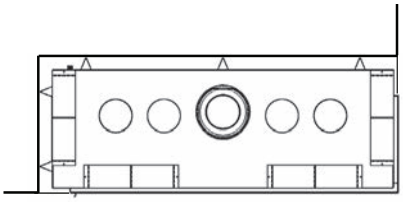

Outside Corner

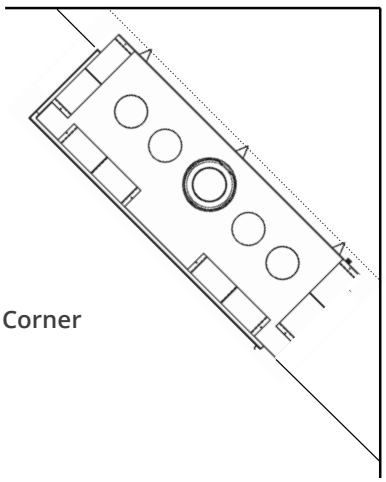

Corner

Planning

Caution

Only qualified licensed or trained personnel should install this appliance.

Installer—READ THIS FIRST

1. **YOU NEED TO KNOW FROM THE HOMEOWNER:**
   - Height of appliance;
   - HeatShift components;
   - Thickness and type of wall finish around appliance;
   - Accessories used;
   - Venting configuration - 4 x 6-5/8 or 5 x 8
2. Unpack the appliance and recycle the packaging EXCEPT THE CARTON PROTECTING THE BARRIER SCREEN—KEEP IT!
3. Remove front window and all items inside firebox.
4. Check that you have everything, using Pack Content sheet. Also, check that you have:
   - fuel bed (packed separately)
   - liners (packed separately)
   - Remote Battery & Wall Switch Kit RBSWK
   - HeatShift Kit (mandatory)
   - Gas conversion kit if necessary
   - Venting accessories
   - Electrical accessories*
5. Carefully read the Installer's Checklist included with the fireplace for the installation sequence.

WARNING

HeatShift Kit MUST be installed on this appliance!

Please note that the following steps must be done BEFORE the appliance is placed in its final position in the cavity since the connections are done from the back of the appliance:

- electrical connections*
- gas connections
- gas conversion (if needed)
- wiring of the Remote Battery & Wall Switck Kit RBWSK

WARNING

*** NO electrical connections allowed for any outdoor installation.**

Planning

Overview

⚠ WARNING

Ensure weight of wall above is NOT carried by the appliance.

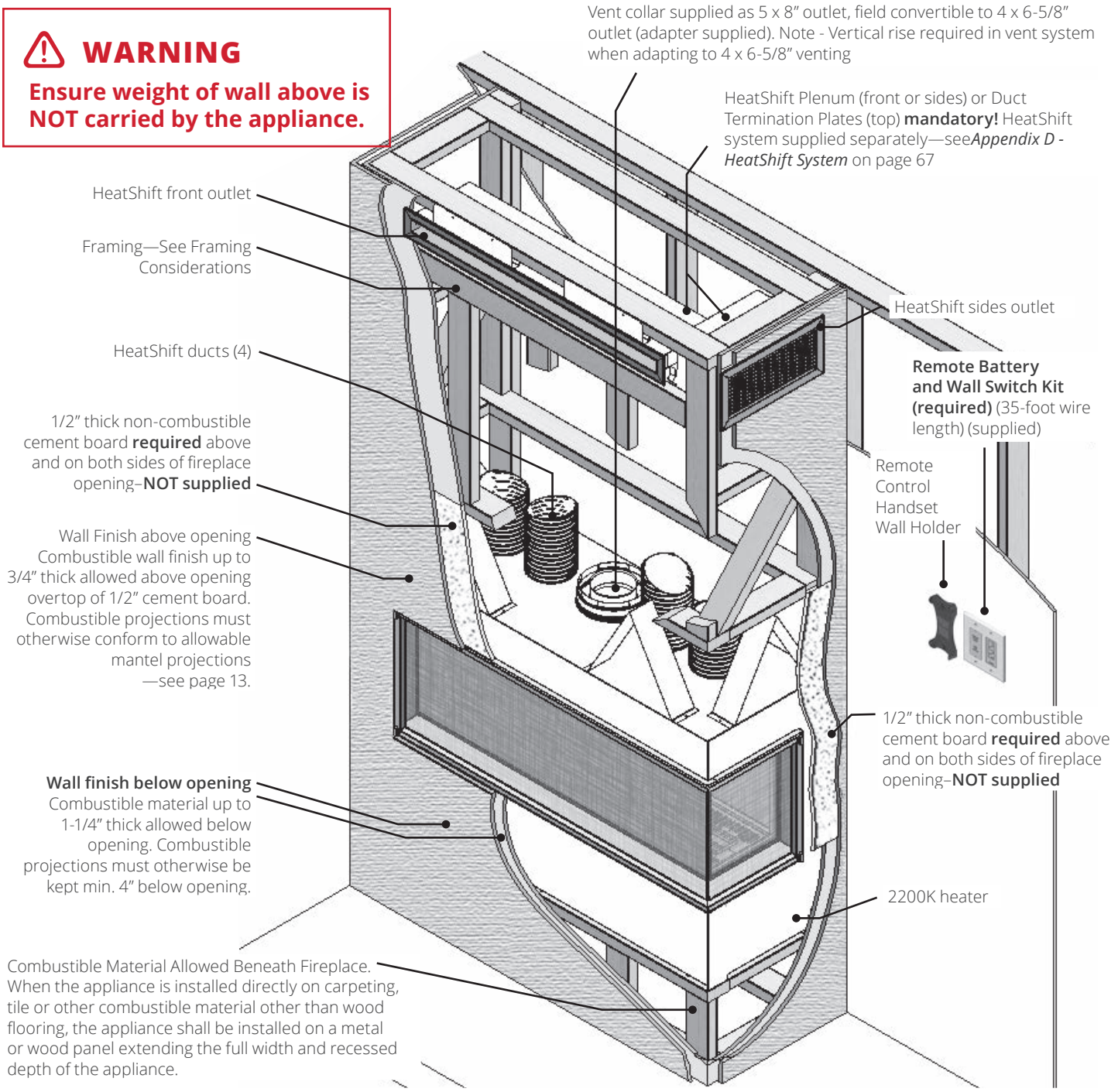

⚠ WARNING

Some materials or items, although safe, may discolor, shrink, warp, crack, peel and so on because of the heat produced by the fireplace. Avoid placing candles, paintings, photos, and other items sensitive to heat around the fireplace.

NOTE

This appliance may be installed in outdoor, weather protected environments as defined in the GV60CKO Outdoor Conversion Kit instruction manual.

However, NO electrical connections are allowed for any outdoor installation.

Clearances—Combustible Projections

WARNING

Ensure weight of wall above is NOT carried by the appliance.

Non-combustible material

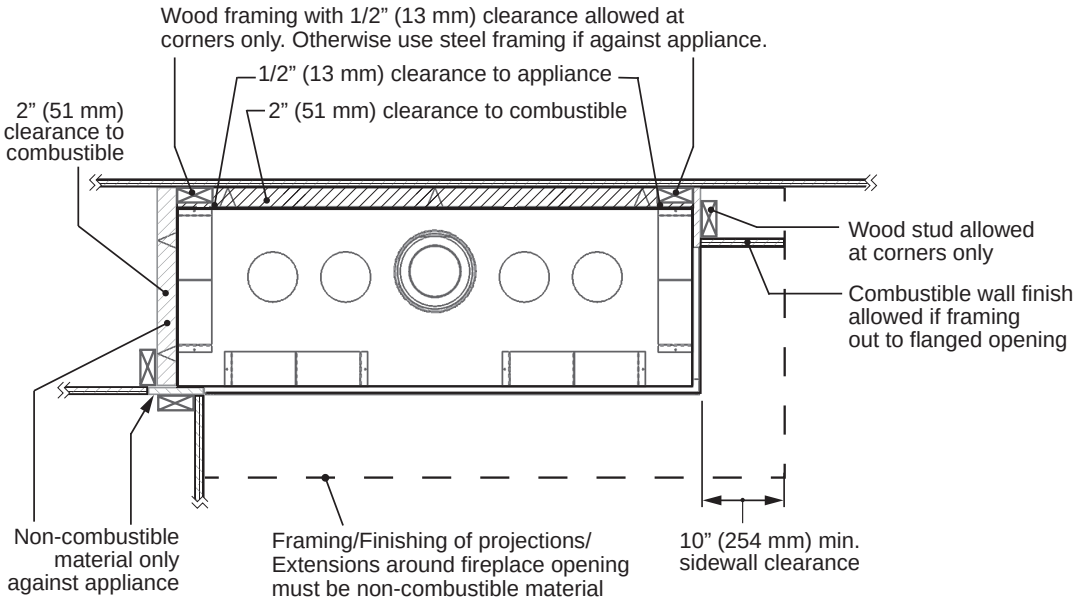

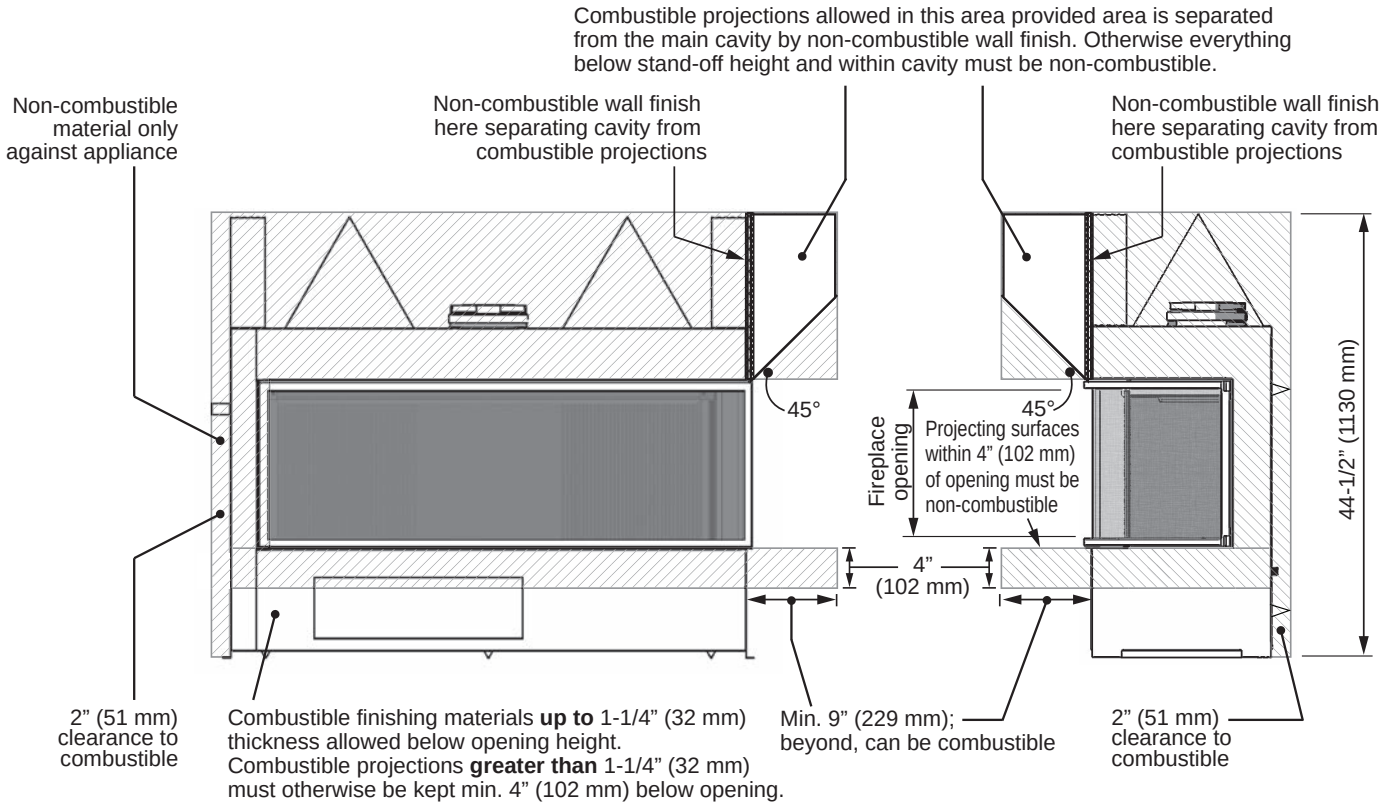

Alcove above opening

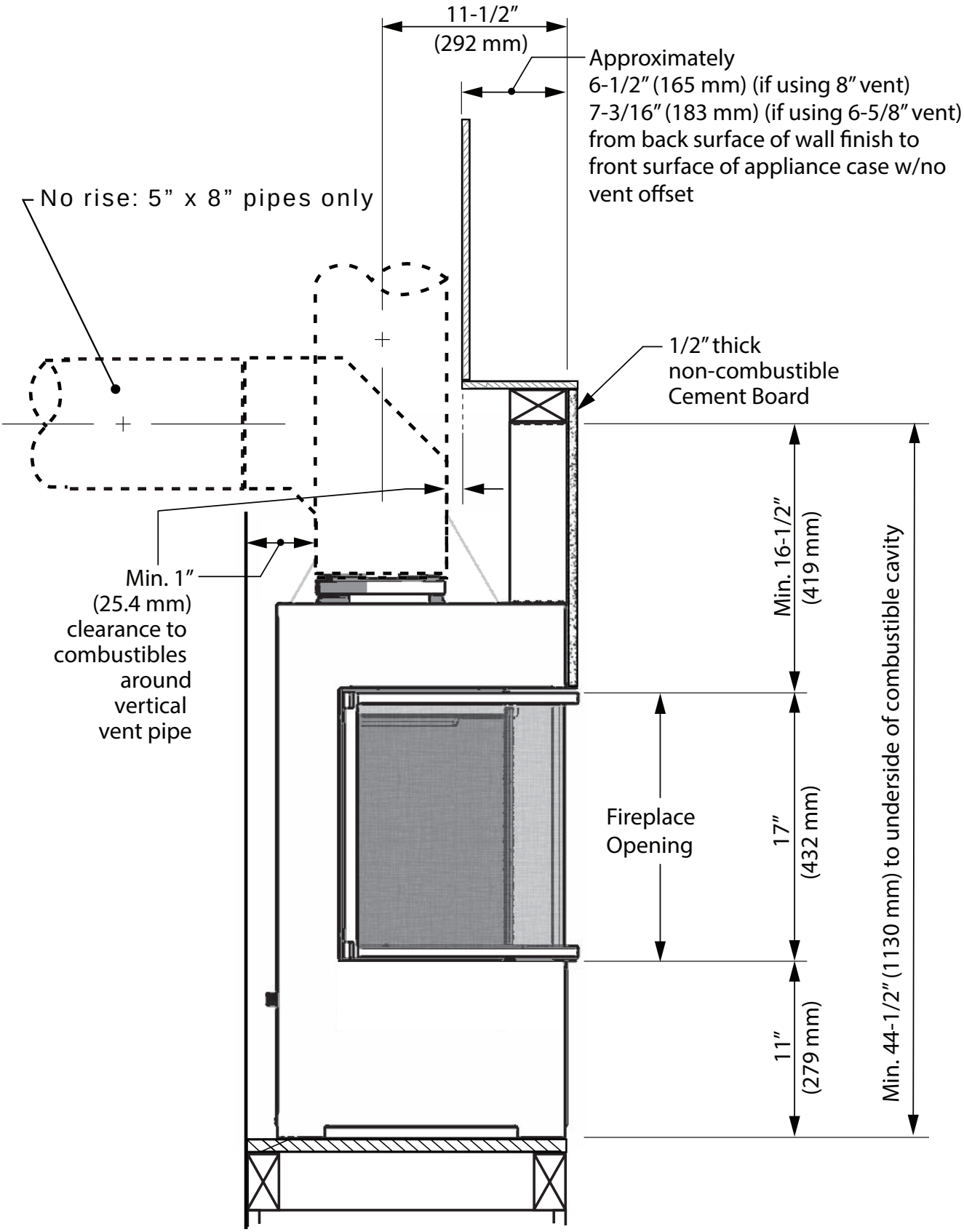

Minimum Vertical Vent—6-5/8" Vent

* This is the minimum vent height when using 6-5/8 inch venting. If calculating the vent height using **additional** vent lengths, subtract approximately 1-1/2 inch for each pipe joint. For example, an **additional** 12-inch pipe section will add approximately 10-1/2 inches overall to this dimension. Alternatively, **substituting** a 24-inch pipe length for the min. 12-inch section will add 12 inches to this dimension as there is no additional pipe joint.

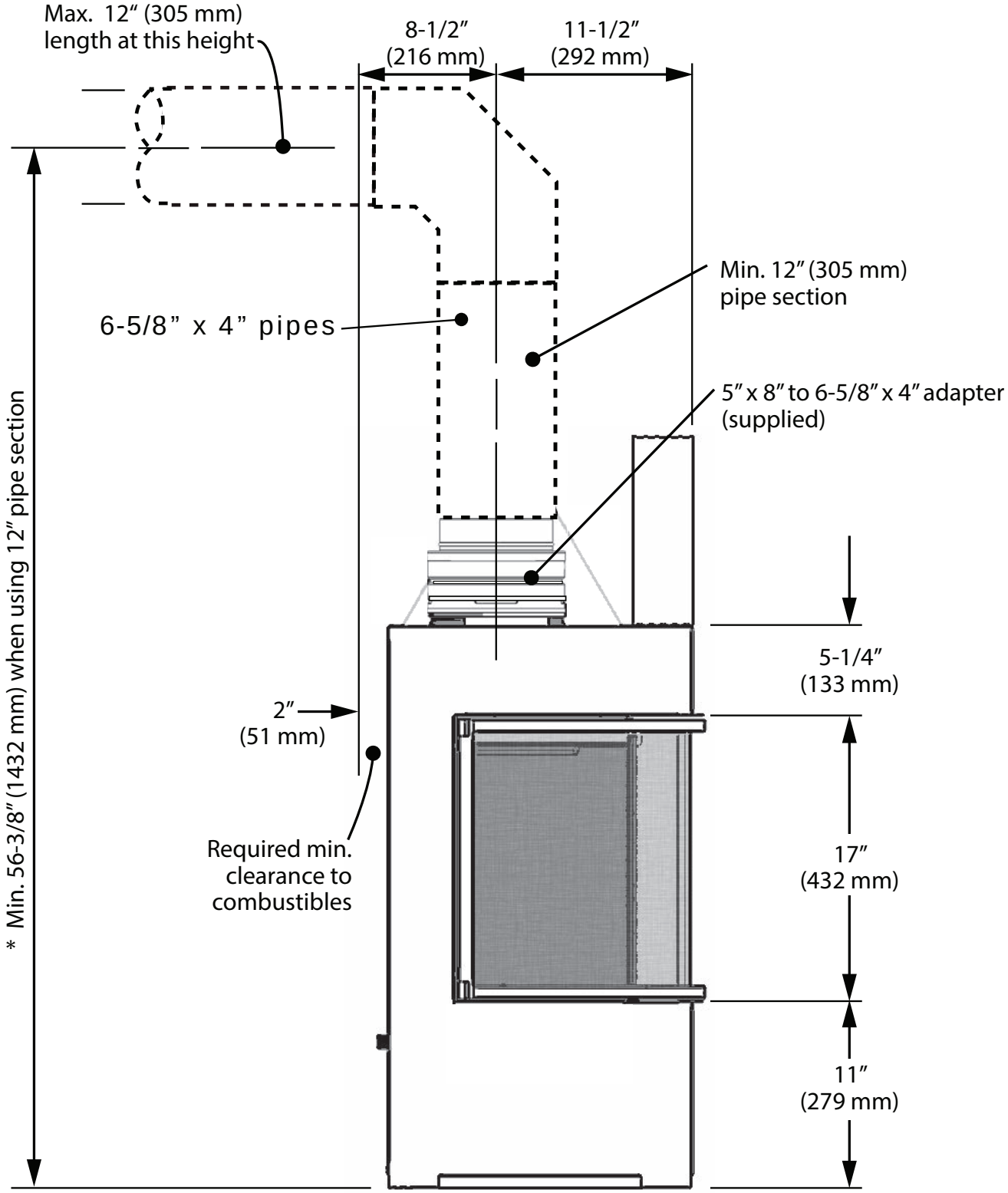

Minimum Vertical Vent—8" Vent

* This is the minimum vent height when using 8-inch venting. If calculating the vent height using **additional** vent lengths, subtract approximately 1-1/2 inch for each pipe joint. For example, an **additional** 12-inch pipe section will add approximately 10-1/2 inches overall to this dimension.

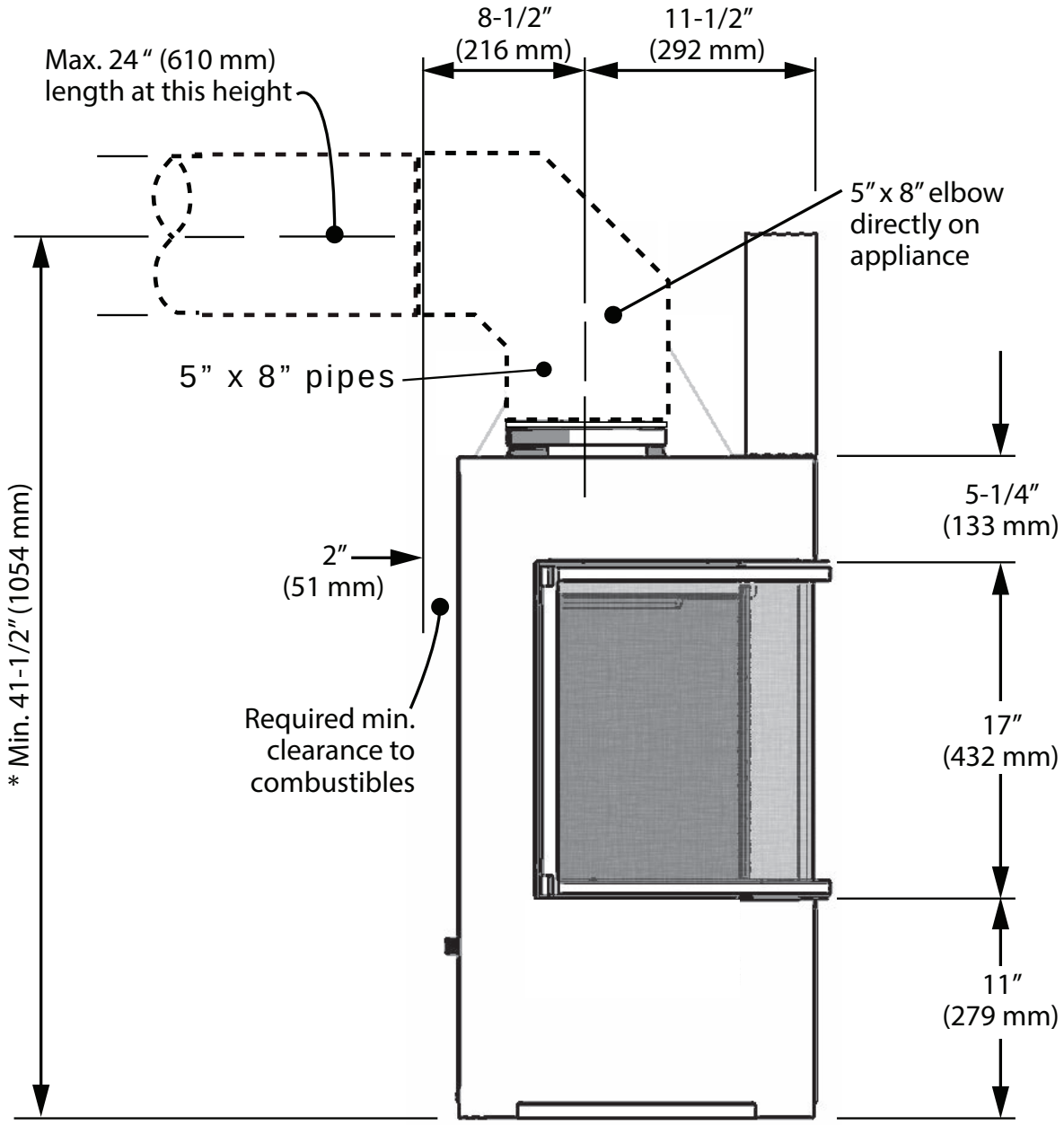

Framing—Minimal

⚠ WARNING

Ensure weight of wall above is NOT carried by the appliance.

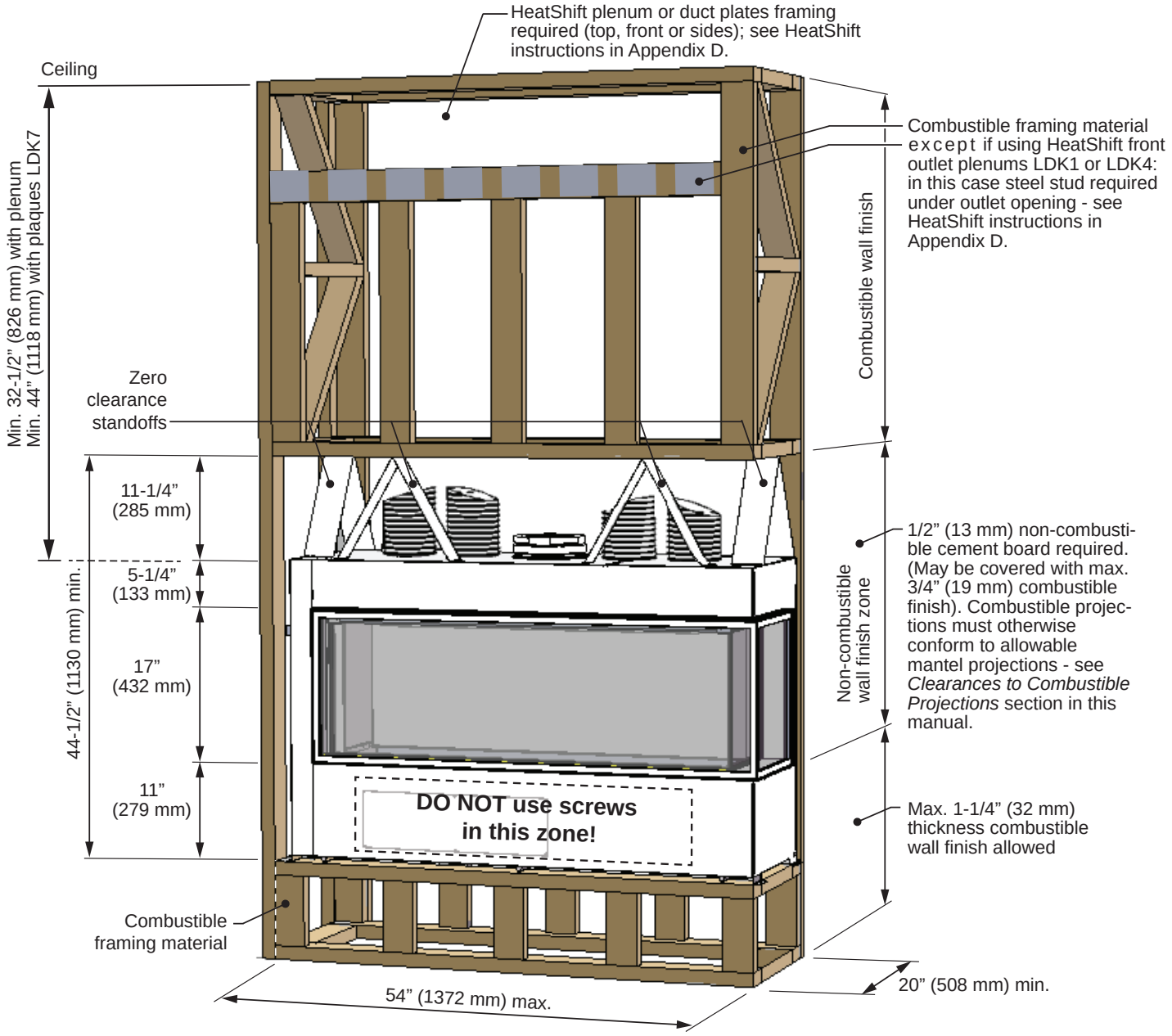

Framing—Extended

⚠ WARNING

Ensure weight of wall above is NOT carried by the appliance.

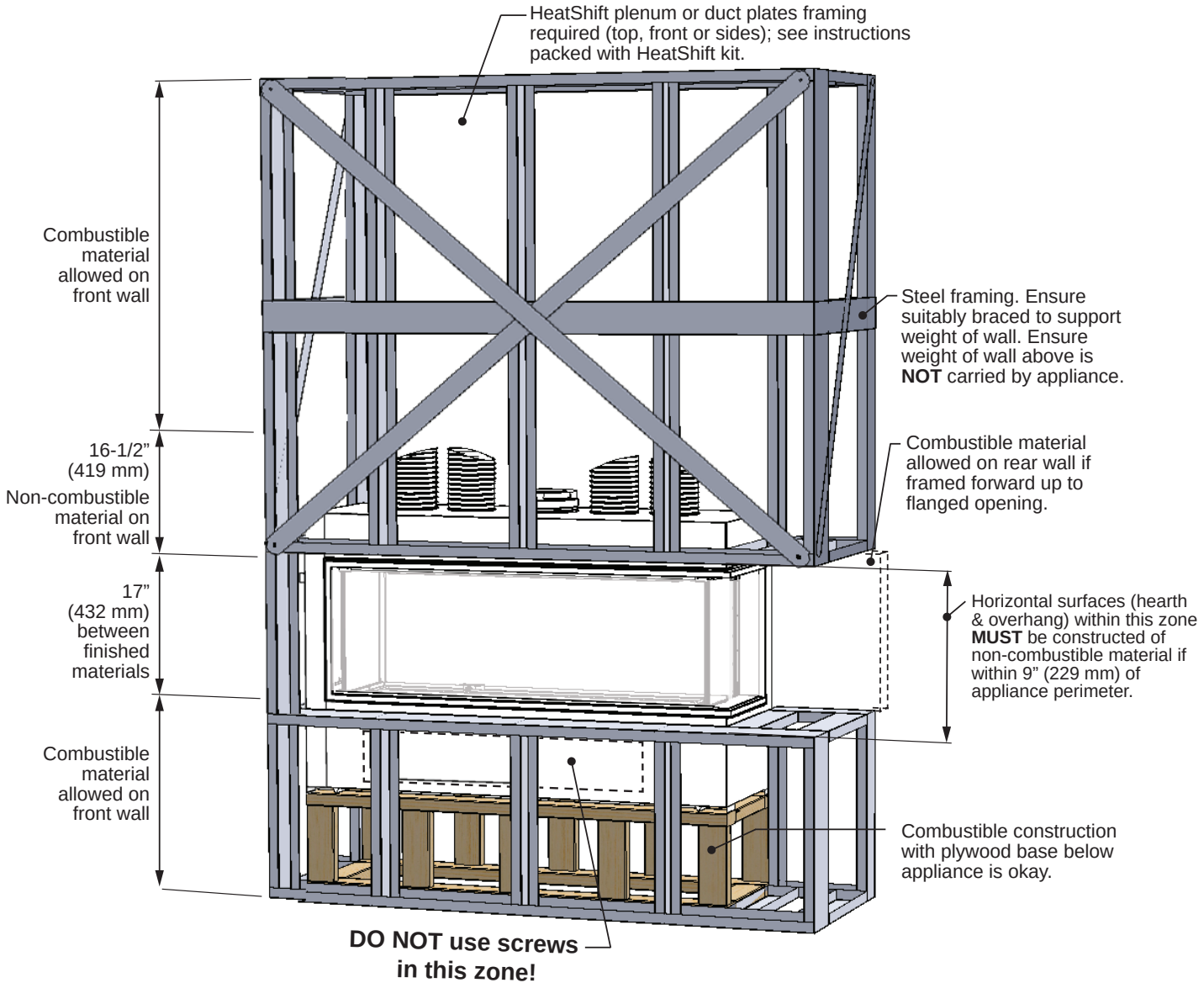

Plan Wall Finish

Non-Combustible Materials Specifications

Material which will not ignite and burn. Such materials are those consisting entirely of steel, iron, brick, tile, concrete, slate, glass or plasters, or any combination thereof.

Materials that are reported as passing ASTM E 136, Standard Test Method for Behavior of Materials in a Vertical Tube Furnace at 750 °C shall be considered non-combustible materials.

Combustible Materials Specifications

Materials made of or surfaced with wood, compressed paper, plant fibers, plastics, or other material that can ignite and burn, whether flame proofed or not, or plastered or unplastered shall be considered combustible materials.

Non-combustible cement board

The LX2 fireplace requires a 1/2" (13 mm) thick non-combustible cement board to be used as a wall surface immediately above the unit opening in the front and above and behind the opening on each side.

Extending the cement board well beyond the minimum will help avoid cracking due to differential expansion of materials.

Pre-drill cement board with oversized holes and do not over-tighten screws to avoid cracking due to heat expansion.

Standard gypsum wall board may be used beyond the perimeter of the cement board.

Non-combustible finishing over cement board

Additional non-combustible material such as tile, etc., may be applied over top of the cement board or you may choose to leave it finished clean with no tile.

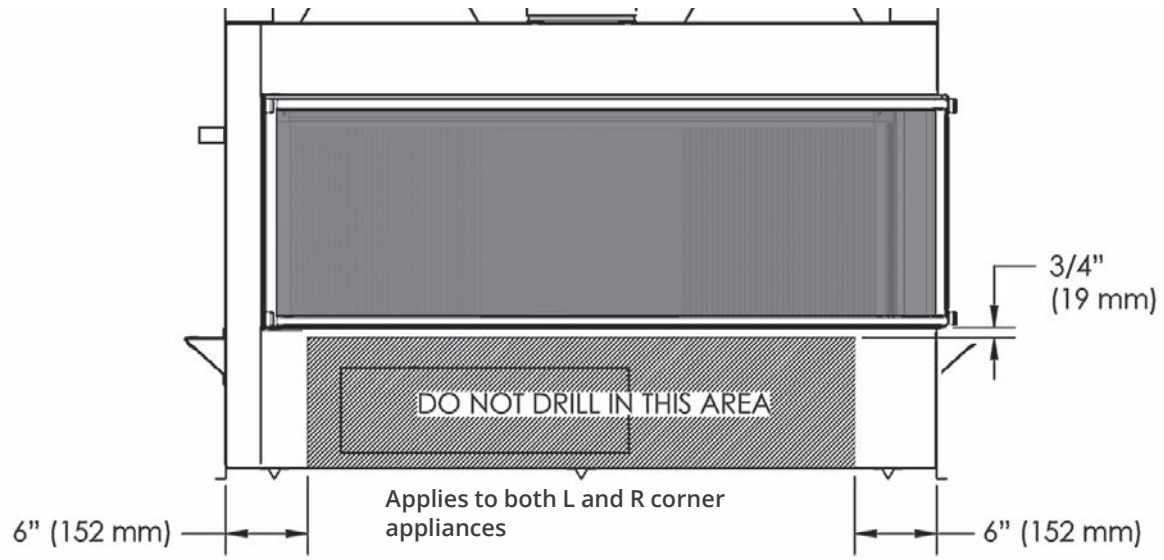

Cracking wall finishes

The HeatShift system reduces the wall temperatures and minimizes the possibility of cracking wall finishes.

If a clean finish with no tile, etc. is desired, joints in the cement board and the transition to gypsum board will require special attention if future cracking is to be controlled. Be aware that temperatures on the non-combustible wall surface above the appliance can exceed 175°F.

Below are some tips on how to best avoid any cracking:

- Allow materials to dry thoroughly before finishing the wall. Cement board has the ability to absorb up to 30 percent of its weight in water and may shrink as much as 1/8" over a 48" length when drying from a saturated condition. Running the fireplace before final finishing will help drive out moisture.
- Always pre-drill screw holes through cement board and use screws with self-milling head.
- Always use tape over joints.
- Behind joints, double up studs or use studs "on the flat" to add extra support to the joint. Adhesive on the backside of wall board behind any joints can help control differential movement.
- Use multiple, thinner coats of joint compound and allow to dry thoroughly between coats.
- Ensure framing materials are dry.
- After finishing the wall, introduce heat gradually to slowly dry any excess moisture rather than drying too fast.
- Avoid notching cement board or tiles around corners of window opening and instead provide a joint that intersects the corner.

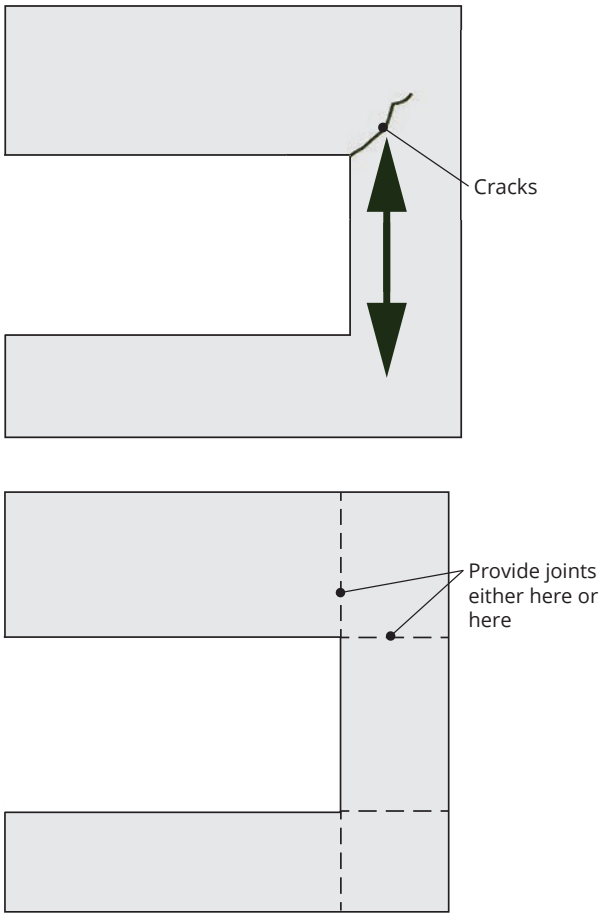

Vent Material

This unit is approved for installation using 5 x 8 inches co-axial direct vent pipe and accessories as listed in the *Approved Venting Components* on page 8 of this manual. Follow the installation instructions supplied with the individual venting accessories.

This unit may also be converted to 4 x 6-5/8 inches co-axial direct vent pipe and accessories using the adapter supplied with the appliance—see list in the *Approved Venting Components on page 8* of this manual.

Vent Sealing

Seal all **outer** coaxial pipe and elbow joints, including sectioned elbow **outer** joints, using high quality, high temperature 2 inch wide self-adhesive aluminum foil tape (Nashua-322-2 brand or similar). Wrap the tape completely around all **outer** joints and press firmly to seal.

A high temperature black silicone sealant may be used on the **outer** joints as a substitute to foil tape.

Ensure all the pipe joints have a minimum of 1 ¼ inch overlap.

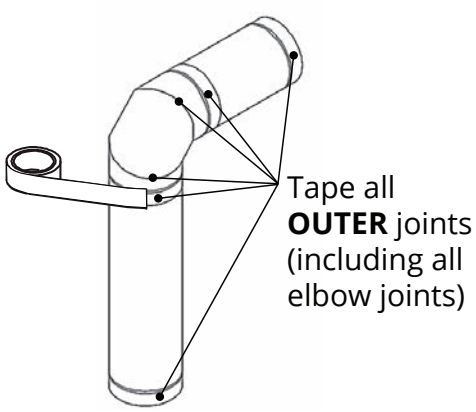

Wall Thickness

The appliance vent is suitable for penetrating a combustible wall assembly up to 8 inches in thickness. A non-combustible wall can be of any thickness up to the maximum horizontal run of vent pipe allowed for the particular installation.

Framing Vent in Combustible Walls & Ceilings (6-5/8" and 8" pipes)

When penetrating through combustible walls and ceilings, frame **a minimum of 10 in x 10 in** opening and ensure that the insulation is kept clear of the vent pipe using either a wall thimble or an attic insulation shield. Note that some vent manufacturers' wall thimble dimensions may require larger framed openings—follow the installation instructions supplied with the individual venting components.

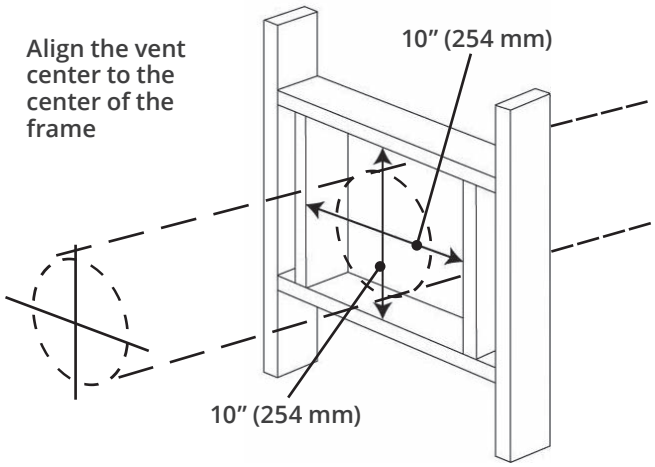

Important Installer Notice – Weather Sealing & Vapor Barriers

It is the installer's responsibility to ensure that vent installations through exterior walls are caulked and weatherproofed in such a manner as to:

- Prevent rain water from entering the wall from the weather side by adequately caulking the outer vent plate to the exterior wall surface.
- Prevent moisture inside the home from penetrating into the wall structure by ensuring the inside wall plate is adequately sealed to the inside vapor barrier.
- Prevent rain water and moisture from entering the walls by sealing the joints between the outer vent tube and the inner and outer wall plates.

We recommend the use of a high quality polyurethane sealant.

All horizontal pipe runs must be graded 1/4 inch per foot upwards in the direction of the exhaust flow. The final pipe length, when terminating through the wall may be graded downwards slightly to prevent water migration.

Typical Co-axial Venting Components

Appliance provided with 5 x 8" vent collar and 4 x 6-5/8" vent adapter.

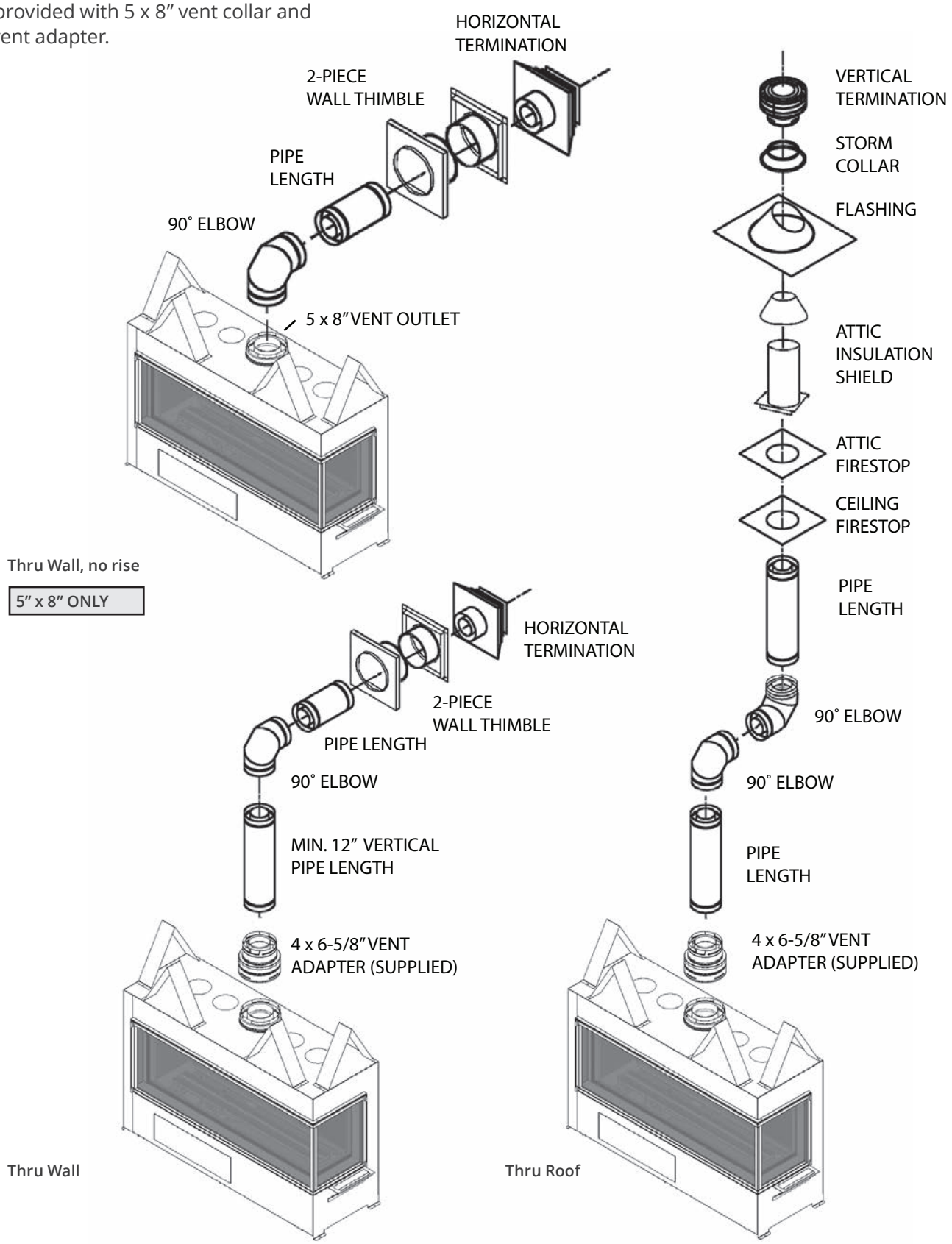

Venting Chart—4” x 6-5/8”

How to Read the Venting Chart

The chart below applies to co-axial roof or wall termination.

1. Minimum 12 inch vertical pipe section required right at unit when using 6-5/8” venting.
2. The total length of the vent pipe cannot exceed 40 feet.
3. The minimum vertical height with roof termination is 6 feet.
4. Any combination of rise and run can be used as long as they are within the allowable limits shown on the chart below.
5. A maximum of 4 x 90 degrees elbows—or equivalent (2 x 45 degrees = 90 degrees)—can be used.
6. Each 90 degrees elbow installed on the horizontal plane is equivalent to a 3 feet horizontal pipe; therefore, 3 feet must be subtracted from allowable horizontal run. (45 degrees elbow is equivalent to 18 inches horizontal pipe.)
7. All horizontal pipe runs must be graded 1/4 inch per foot upwards in the direction of the exhaust flow. The final pipe length, when terminating through the wall may be graded downwards slightly to prevent water migration.
8. A restrictor adjustment is required for most installations having a vertical rise—see next section.
   Note: The restrictors are shipped installed at the exhaust exit of the firebox.

Venting Chart with 4” x 6-5/8” pipes

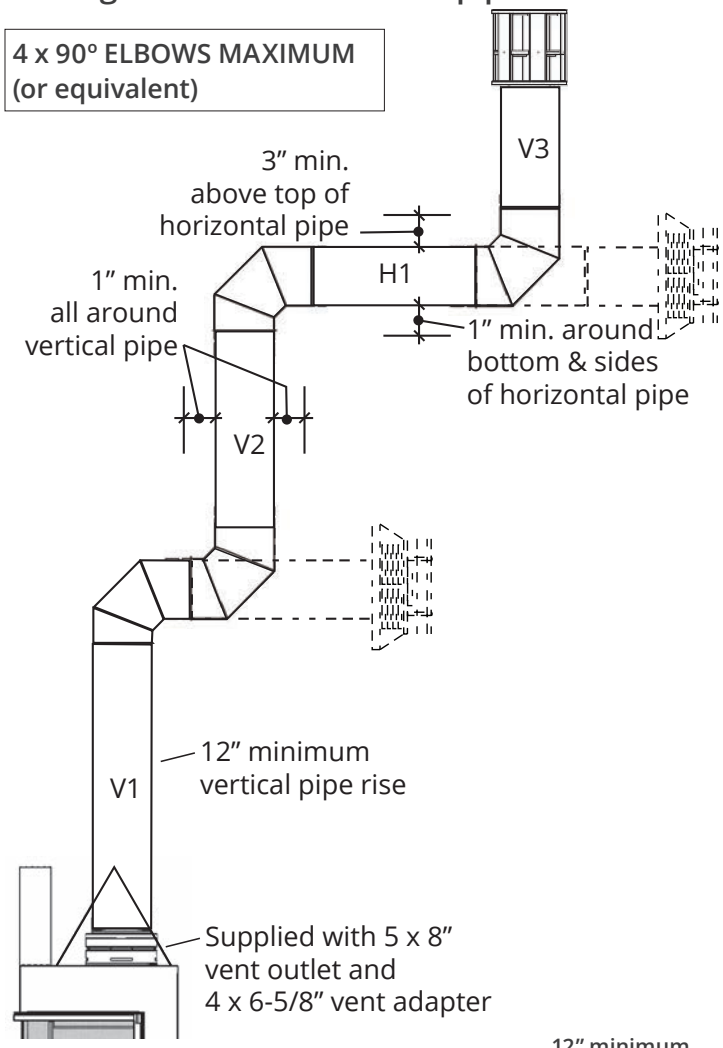

Example 1
V Value = V1 (3’) + V2 (2’) + V3 (1’)= 6’
H Value = H1 (2’) = 2’
Restrictor position # 6 required

Allowable Co-Axial Vent Configurations with restrictor positions — with 4” x 6-5/8” pipes

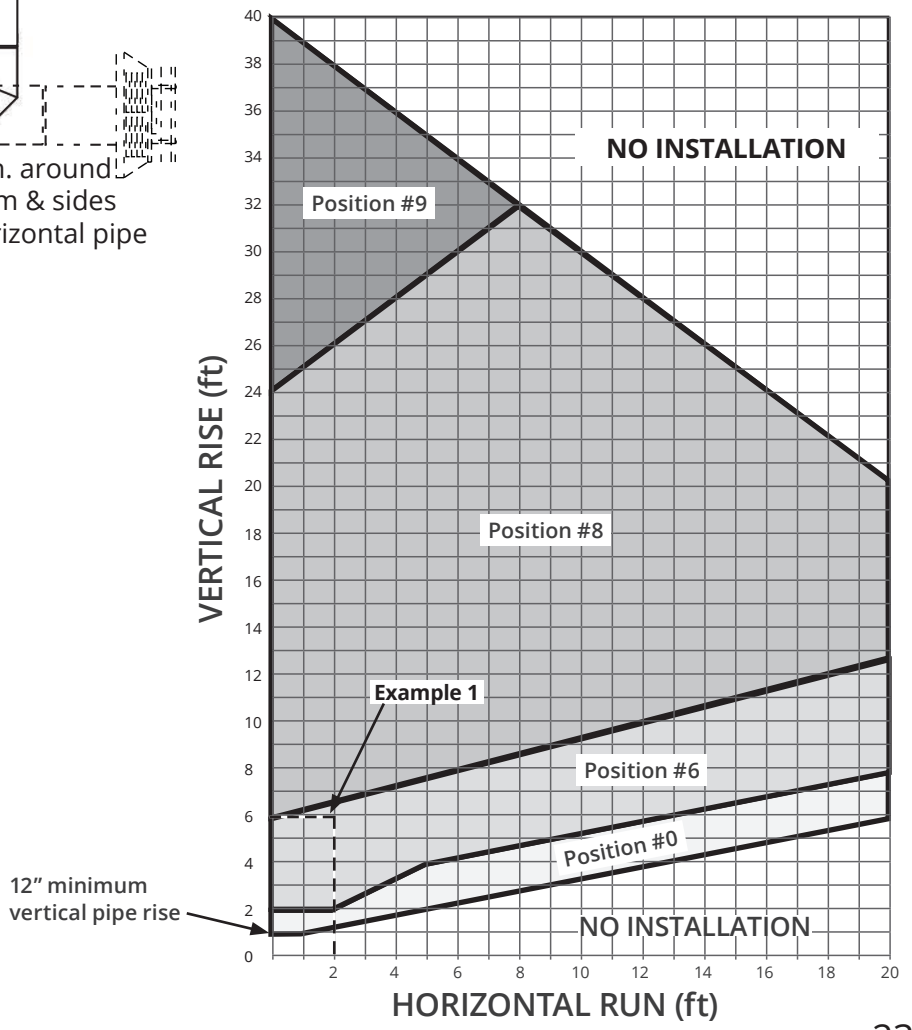

Venting Chart—5” x 8”

How to Read the Venting Chart

The chart below applies to co-axial roof or wall termination.

1. Maximum 24 inch horizontal pipe section allowed when using a 90 degrees elbow directly at the appliance.
2. The total length of the vent pipe cannot exceed 40 feet.
3. The minimum vertical height with roof termination is 6 feet.
4. Any combination of rise and run can be used as long as they are within the allowable limits shown on the chart below.
5. A maximum of 4 x 90 degrees elbows—or equivalent (2 x 45 degrees = 90 degrees)—can be used.
6. Each 90 degrees elbow installed on the horizontal plane is equivalent to a 3 feet horizontal pipe; therefore, 3 feet must be subtracted from allowable horizontal run. (45 degrees elbow is equivalent to 18 inches horizontal pipe.)
7. All horizontal pipe runs must be graded 1/4 inch per foot upwards in the direction of the exhaust flow. The final pipe length, when terminating through the wall may be graded downwards slightly to prevent water migration.
8. A restrictor adjustment is required for most installations having a vertical rise—see next section.
   Note: The restrictors are shipped installed at the exhaust exit of the firebox.

Venting Chart with 5” x 8” pipes

4 x 90° ELBOWS MAXIMUM (or equivalent)

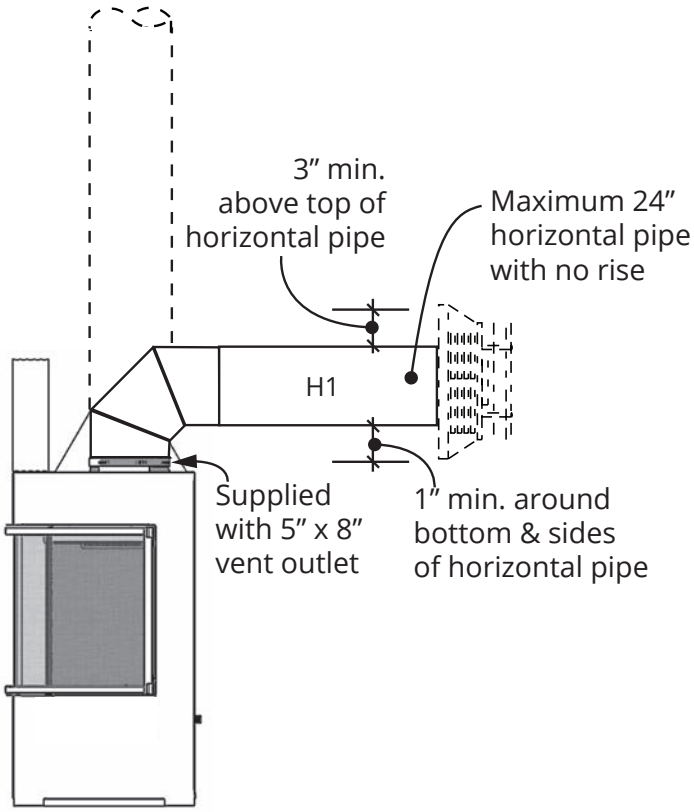

Allowable Co-Axial Vent Configurations with restrictor positions — with 5” x 8” pipes

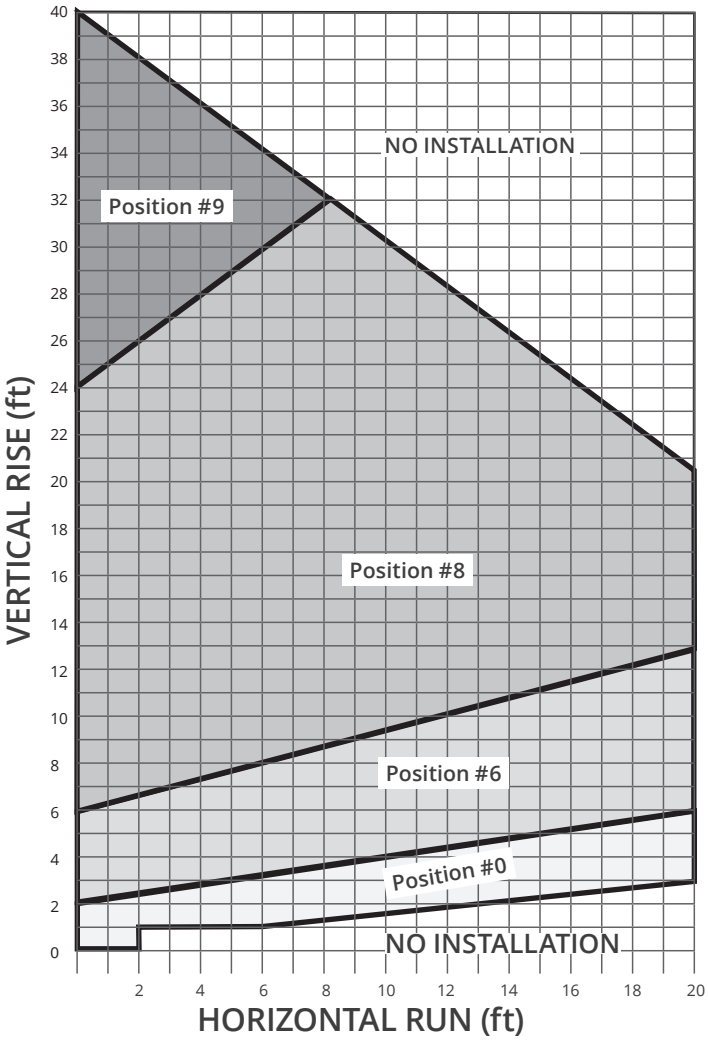

Restrictors

ALL INSTALLATIONS REQUIRE A RESTRICTOR for improved flame picture and performance. This unit is supplied with a pre-fitted restrictor having different positions or settings. The restrictor is shipped mounted at the maximum open position. The level of restriction required depends on the vertical rise in the venting system and, to a lesser degree, the horizontal run and number of elbows.

The amount of restriction is based on laboratory tests. The ideal restrictor position may vary slightly, especially when the vent pipe length is near the limits of the acceptable configurations for each type of restrictor.

The chart on the previous page shows the vent restrictor required relative to the length of the vent pipe.

The restrictors are located in the roof of the firebox hidden above the top panel.

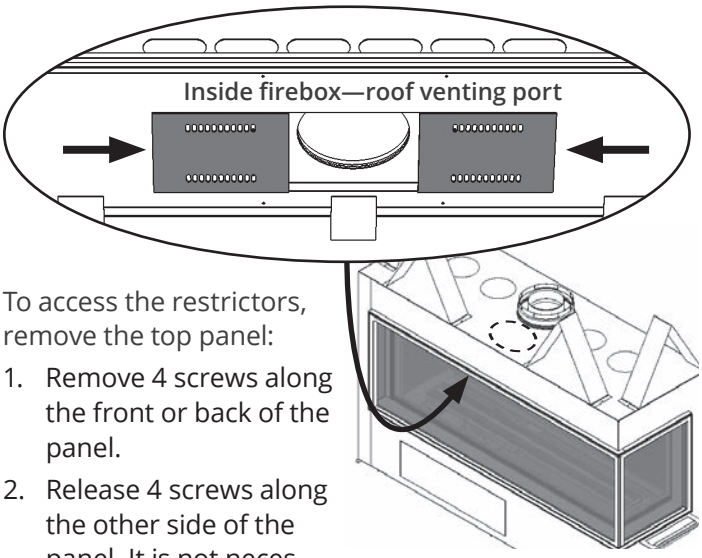

To access the restrictors, remove the top panel:

1. Remove 4 screws along the front or back of the panel.
2. Release 4 screws along the other side of the panel. It is not necessary to remove the screws.
3. Slide the panel to unhook it and set aside.
4. The restrictors are set in position 0, 0 at the factory. The position 0 is at the center and the position 10 is the farthest away from the center. Adjust the restrictors position as needed—up to position 9—**DO NOT CLOSE ALL THE WAY TO POSITION 10!**:

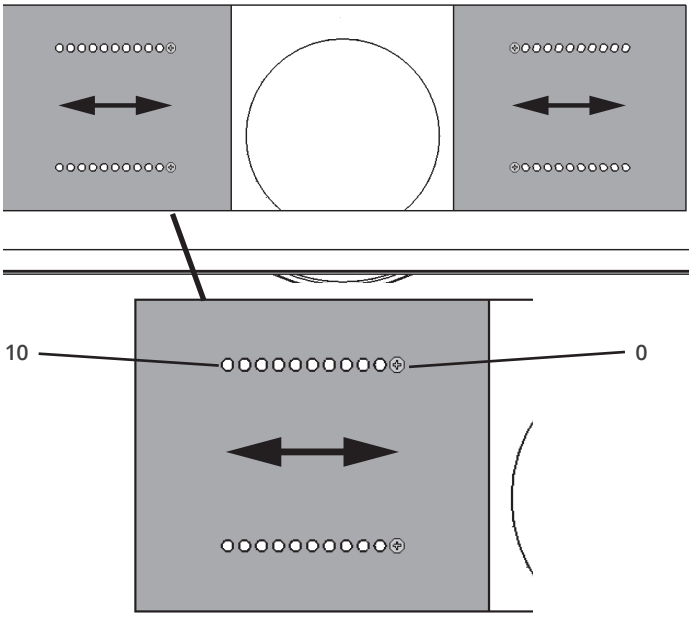

   a. Establish the required position of the restrictors looking up the appropriate venting table (according to vent pipes size) on the previous pages.
   b. Remove the screws (2) on each restrictor already installed **on the firebox roof port**.
   c. Slide the restrictors in the required positions.
   d. Refit and tighten the screws.
5. Reinstall the top panel sliding it on the screws previously released; tighten the screws.
6. Refit and tighten the screws previously removed.

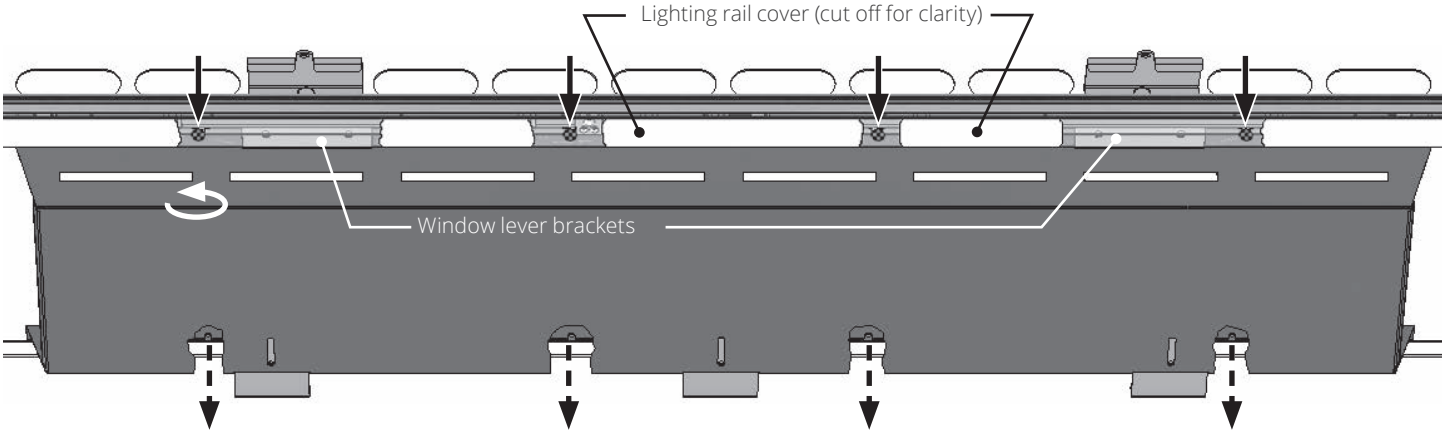

Horizontal Vent Termination Location

- The vent terminal must be located on an outside wall or through the roof.
- This direct vent appliance is designed to operate when an undisturbed airflow hits the outside vent terminal from any direction.
- The minimum clearances from this terminal that must be maintained when located on an outside wall are shown in figure below. Any reduction in these clearances could result in a disruption of the airflow or a safety hazard. Local codes or regulations may require greater clearances.
- The vent terminal must not be recessed into a wall or siding.
- The vent terminal should be positioned where any snowdrifts will not cover it.
- Sidewall vent terminations require a terminal guard such as 658TG or 845TG when accessible—within 7' of ground.

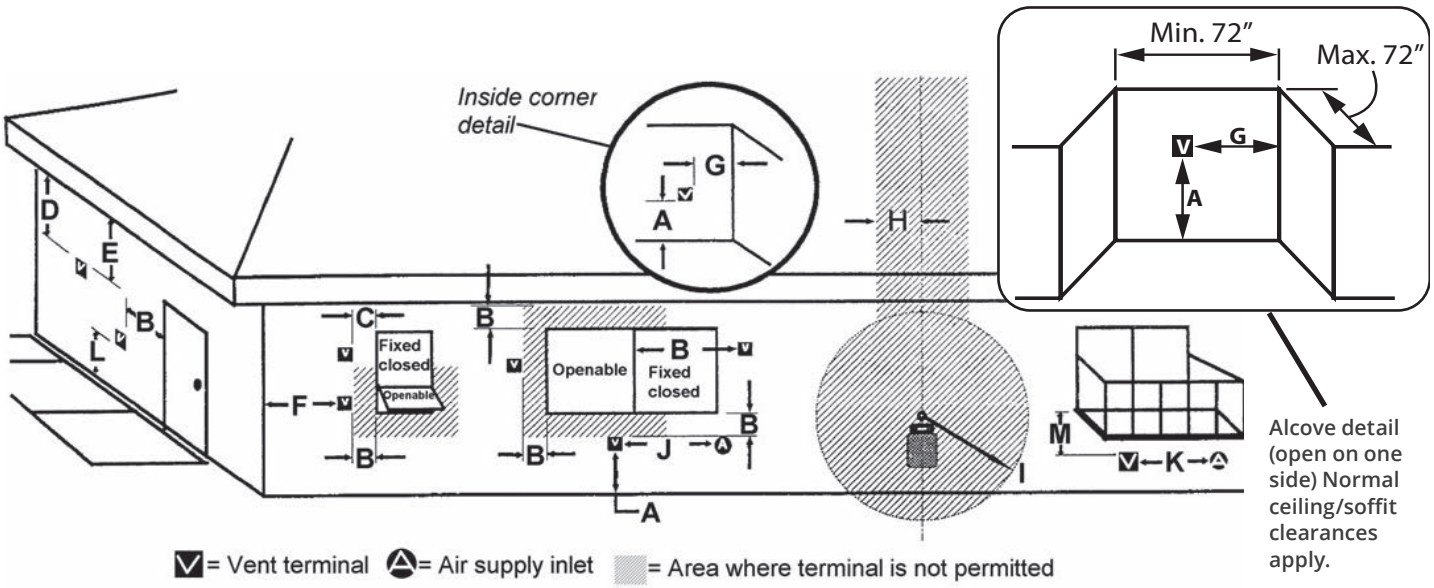

KEY	VENT TERMINAL LOCATIONS - MINIMUM DISTANCES	MINIMUM CLEARANCE	
		Inches	Cm
A	Clearance above grade, verandah, porch, deck or balcony	12	30
B	Clearance to window or door that may be opened	12	30
C	Clearance to permanently closed window (recommended to prevent condensation on window)	12	30
D	Vertical clearance to ventilated soffit located above the terminal within a horizontal distance of 2 feet (60 cm) from the center-line of the terminal	18	46
E	Clearance to unventilated soffit	12	30
F	Clearance to outside corner (measured from the center of vent)	12	30
G	Clearance to inside corner (measured from the center of vent)	12	30
H	Horizontal clearance to center-line of meter/regulator assembly located within 15 feet (4.6 m) below the terminal	36	90
I	Clearance to service regulator vent outlet	36	90
J	Clearance to non-mechanical air supply inlet to the building or the combustion air inlet to any other appliance	12	30
K	Clearance to a mechanical air supply inlet	72	180
L	Clearance above paved sidewalk or a paved driveway located on public property ***Note:*** *A vent must not terminate directly above a sidewalk or paved driveway, which is located between two single-family dwellings and serves both dwellings.* ***THIS DOES NOT APPLY to direct vent, non-consdensing appliances in the Province of Ontario.***	84	210
M	Clearance under a verandah, porch, deck or balcony *Only permitted if veranda, porch, deck or balcony is fully open on a minimum of 2 sides beneath the floor*	12	30

Note: Local codes and regulations may require different clearances.

Vertical Vent Termination

Roof Pitch	Mini-mum "H" (feet)
Flat to 7/12	1'
Over 7/12 to 8/12	1.5'
Over 8/12 to 9/12	2'
Over 9/12 to 10/12	2.5'
Over 10/12 to 11/12	3.25'
Over 11/12 to 12/12	4'
Over 12/12 to 14/12	5'

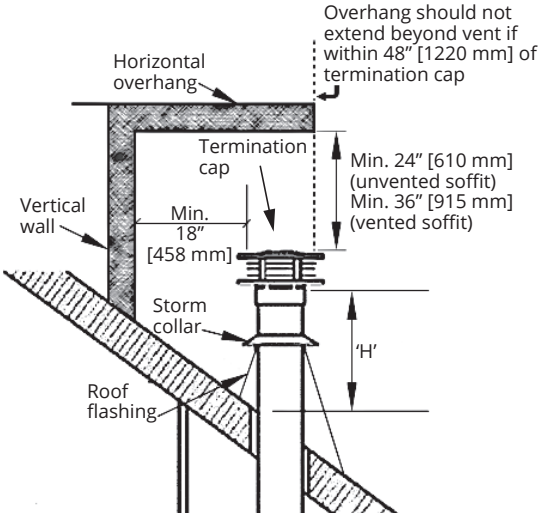

Clearance to air inlet to any other appliance is min. 12" (30 cm)

WARNING

Please note that the HeatShift Kit MUST be installed on this appliance!

Caution

Beware of sharp edges! Wear gloves!

Unpack the Appliance

1. Remove the cardboard wrapping and the wood pallet from the appliance and discard.
   DO NOT DISCARD THE PROTECTIVE CARTON AROUND THE BARRIER SCREEN!
2. Unpack any loose items from around the appliance.
3. Verify that you have all the components required for the installation, including:
   - ***approved non combustible cement board;***
   - ***liners and fuel bed (in separate carton);***
   - ***barrier screen;***
   - ***venting components and accessories;***
   - ***HeatShift Kit;***
   - ***electrical components.***

Remove Window Sill and Window

Remove window sill.

Lift the sill up to free the magnets underneath then pull it straight out.

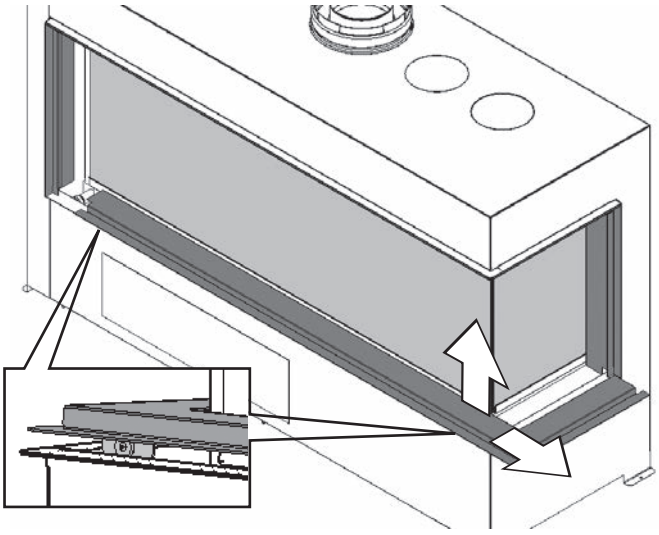

Remove the window.

1. Hook the window handle to one of the spring-loaded window levers.

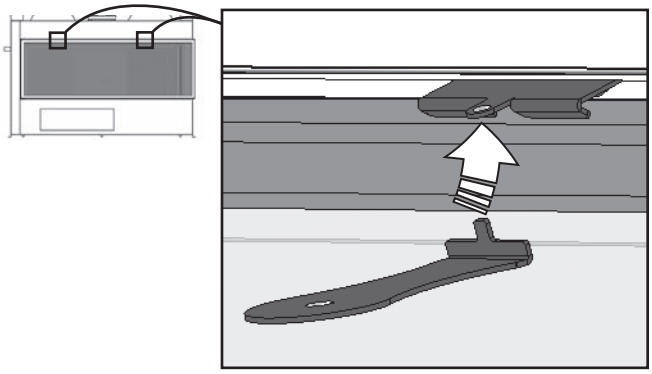

2. Pull the lever and unhook the window. Repeat with the other lever.

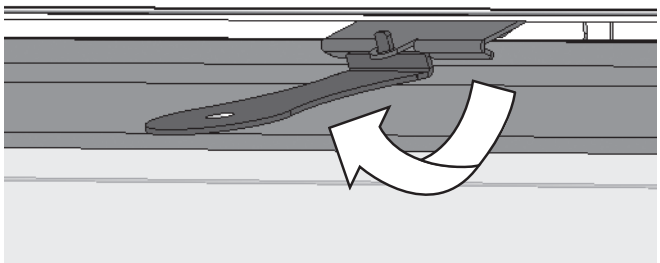

3. Pull the top of the window outward and lift it up behind the front panel to disengage it from its rail.

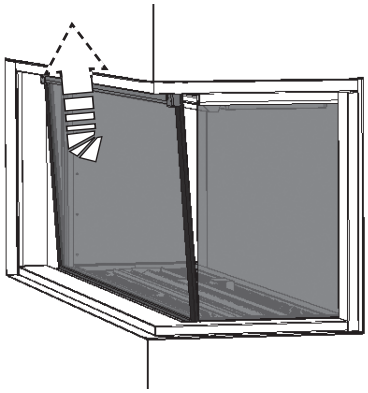

4. Once removed from the bottom rail, rotate the window pane outward to take it out completely; set it aside in a safe place to avoid damage.

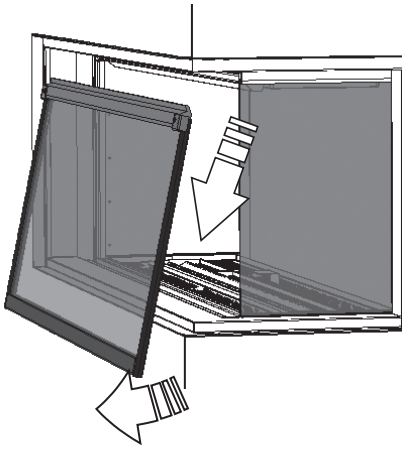

Fit Standoffs

The standoffs are supplied flat. Bend them as shown and fix them to the top of the firebox.

Note: If installing with an all steel framing, the top standoffs are not necessary. Ensure that the framing is self-supporting, that is it NOT supported by the engine.

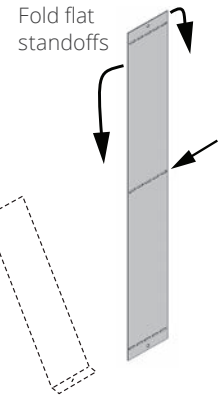

Fit 6-5/8" x 4" Vent

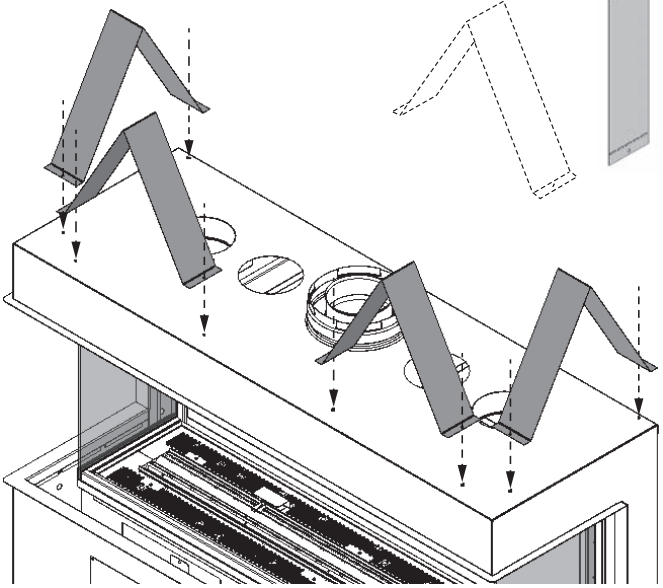

Adapter (if required)

This unit is supplied with a 5" x 8" vent outlet which can be field-converted to a 4" x 6-5/8" vent outlet by installing the vent adapter supplied with the appliance.

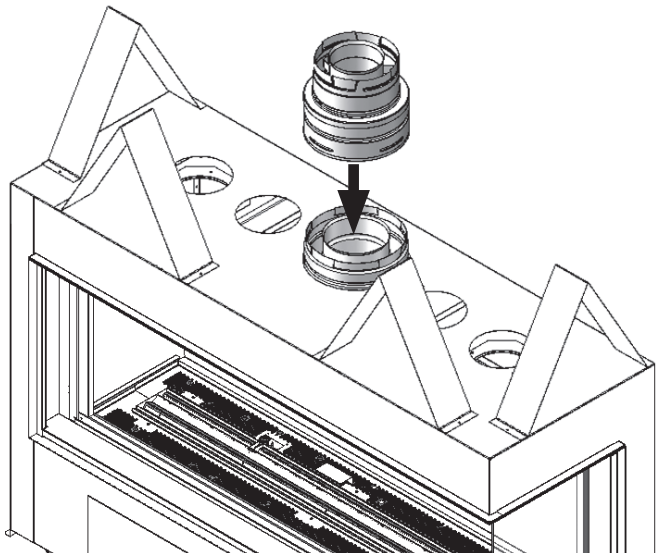

Fit HeatShift Take-off Collars (required)

Install HeatShift take-off collars to appliance using screws provided with appliance. See HeatShift installation information in Appendix for details.

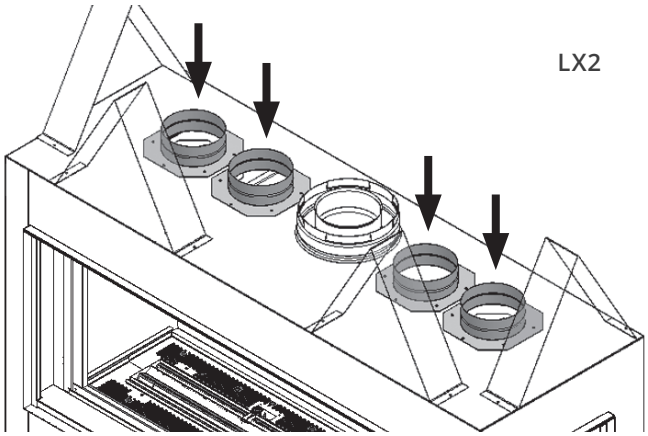

Prepare Appliance for Wiring

Decorative Lighting and Remote Battery & Wall Switch Kit (RBWSK)

The fireplace is equipped with a decorative lighting located above the firebed inside the firebox. The lighting is pre-wired at the factory and **must be connected to the electrical system of the home PRIOR to the final positioning of the fireplace** into the framing. The decorative lighting is operated by the fireplace's remote control handset.

Wiring for the overhead lighting and RBWSK kit is accessible from the rear panel of the appliance and therefore it should be done BEFORE the final positioning of the fireplace in the framing.

⚠ WARNING

All electrical installations must be performed by a qualified electrician and must be electrically wired and grounded in accordance with local codes, or, in the absence of local codes, with the National Electrical Code, ANSI/NFPA 70 or the Canadian Electrical Code, CSA C22.1.

The fireplace's upper decorative lighting is connected to the v-module box located behind the appliance's front panel below the window. It is hidden under the valve shield. The v-module is powered by a three-prong plug plugged into a receptacle inside the appliance case, at the rear, on the left-hand side.

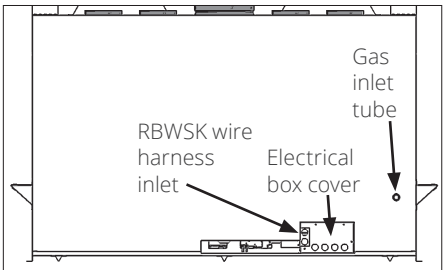

Appliance rear view

⚠ WARNING

NO electrical connections allowed for any outdoor installation.

1. At the back of the fireplace case, on the left-hand side, remove the electrical box cover (4 screws).

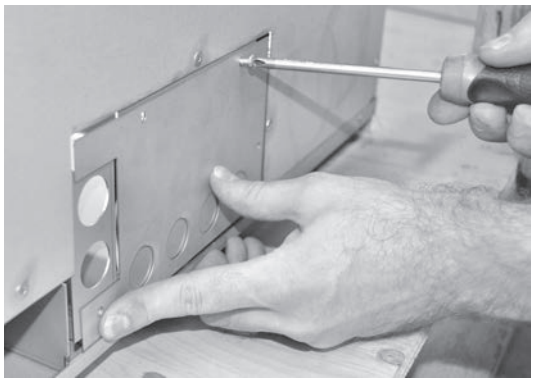

2. Remove a knock-out cover for the electrical connection needed for incoming power.
3. Rough in the wiring harness for the **RBWSK—Remote Battery & Wall Switch Kit**. Thread through one of the holes to the left of the electrical panel both the power connector and the white connector end of the wire harness to reach the receiver at the front of the appliance, about 3 feet (36 cm).

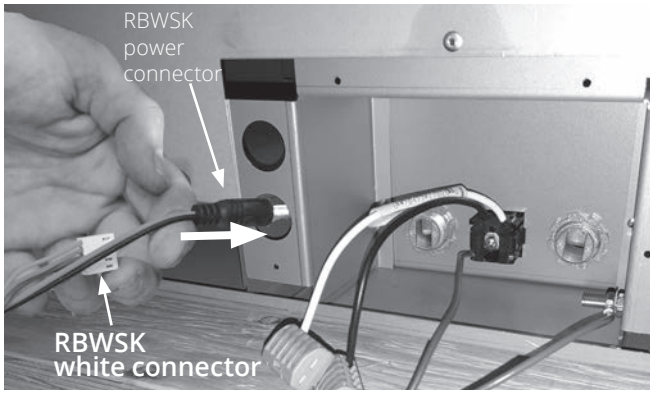

4. Refit the electrical box cover.

5. Remove the 4 screws retaining the appliance to its pallet. Snap off the feet attached to the pallet and discard or recycle.

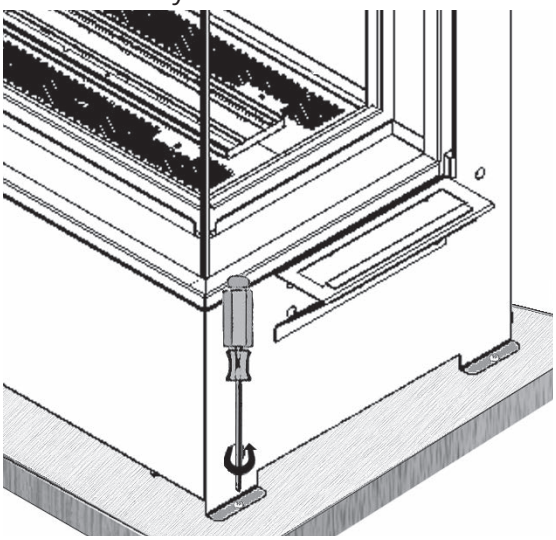

6. With great care not to cut yourself on the sharp feet, set the appliance **partially** into the framing keeping in mind the need to access the rear of the appliance to connect the electrical wires.

Set-up Gas Supply

The gas supply inlet connection is a 1/2" NPT male line stub located on the rear left hand side of the appliance.

The unit is supplied with a stainless steel flex line to allow the appliance to be disconnected for service. An individual shut-off valve (supplied) is required on the supply line ahead of the flex connector.

Use only new black iron or steel pipes, CSST, or copper tubing if acceptable—check local codes. Note that in USA, copper tubing must be internally tinned for protection against sulfur compounds.

Unions in gas lines should be of ground joint type.

The gas supply line must be sized and installed to provide a supply of gas sufficient to meet the maximum demand of the appliance without undue loss of pressure.

Sealant used must be resistant to the action of all gas constituents including LP gas. Sealant should be applied lightly to male threads to ensure excess sealant does not enter gas lines.

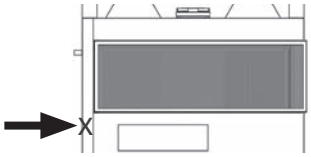

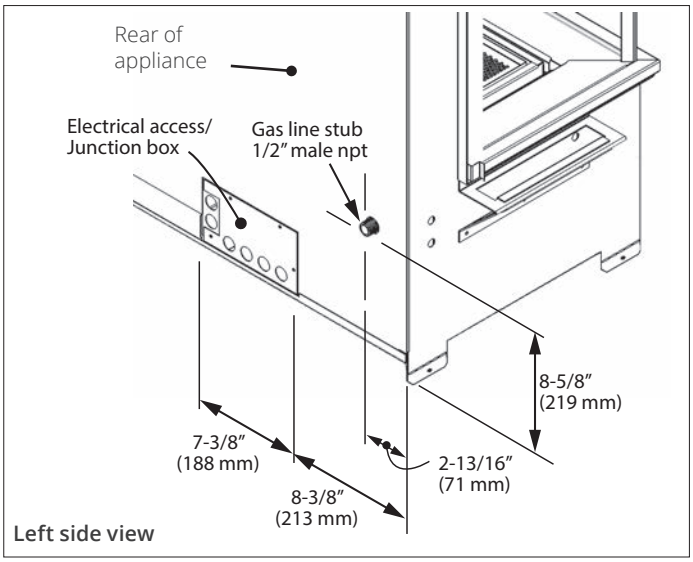

Pressure test the supply line for leaks.

The appliance and its individual shut-off valve must be disconnected from the gas supply piping system during any pressure testing of that system at test pressures in excess of 1/2 psig (3.5 kPa).

The appliance must be isolated from the gas supply piping system by closing its individual manual shut-off valve during any pressure testing of the gas supply piping system at test pressures equal to or less than 1/2 psig (3.5 kPa).

Failure to either disconnect or isolate the appliance during pressure testing may result in regulator or valve damages and void the warranty. Consult your dealer in case of damages.

Pressure Test Points

The minimum supply pressure is given in the section *Specifications* on page 6.

All piping and connections must be tested for leaks after installation or servicing. All leaks must be corrected immediately.

When testing for leaks:

- Make sure that the appliance is turned off.
- Open the manual shut-off valve.
- Test for leaks by applying a liquid detergent or soap solution to all joints. Bubbles forming indicate a gas leak.

⚠ WARNING

Never use an open flame to check for leaks. Correct any leak detedted immediately.

The pressure test tapping locations are shown in the figure below. An internal regulator within the valve controls the burner manifold pressure.

The correct pressure range is shown in the table in section *Specifications* on page 6.

The pressure check should be made with the burner alight and at its highest setting. See “Appendix A - Lighting Instructions Plate”

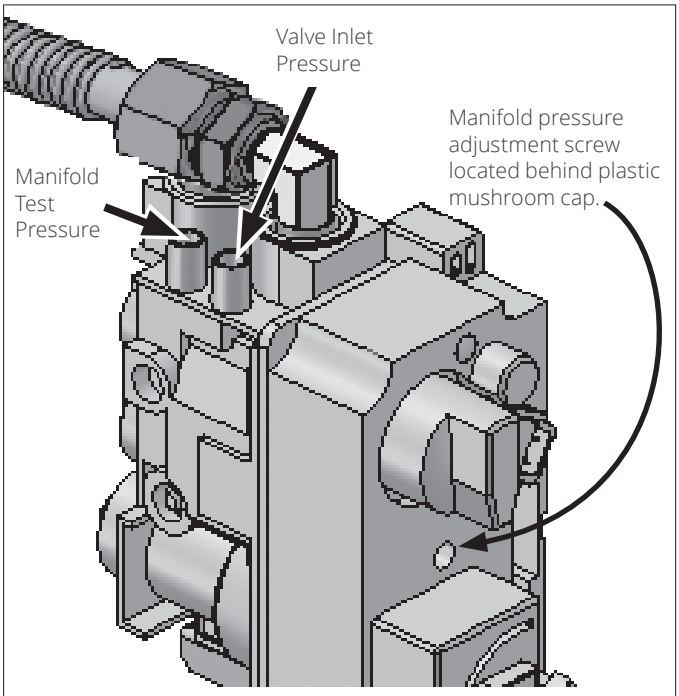

Pressure Testing

Place the appliance in final position

1. Taking great care not to cut your hands on the sheet metal edges, place the appliance in its final position in the framing. *Make sure that the unit is at the right height with consideration to the height of the hearth or combustible flooring.*
2. Remove carrying handles on both side.

Complete Installation of HeatShift Kit (required)

See *Appendix D - HeatShift System* on page 67.

Install Remote Battery and Wall Switch Kit RBWSK (required)

The Remote Battery and Wall Switch Kit is provided with this appliance. It must be connected to the receiver in the fireplace.

Caution

Do not put batteries in the receiver as leaking acid could damage its circuit board.

Installation

The receiver is located behind the appliance's front panel, at the right of the control valve. It is maintained in position with *Velcro* bands.

1. From the front of the appliance through the access panel, grab the wire harness threaded from the back and bring it towards the receiver at the front of the appliance.
2. Pull out the receiver from its location to connect the wiring harness power connector to receiver's jack.

3. Connect the harness' white connector to the auxillary 5-pin junction on the receiver.

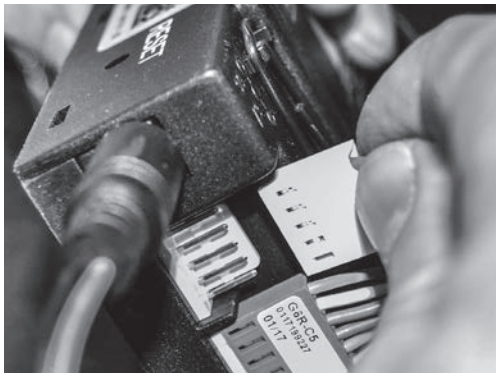

Caution

Do not run the switch wire over the top of the firebox. Route the wire so it does not contact the firebox.

4. Run the harness assembly to the mounted position of the junction box, securing the harness to the framing using insulated staples (not supplied).
5. Feed the harness assembly through a restrain on the rear of the junction box, feeding through until the harness sheath is pinched by the retainer and ensuring sufficent length to make the connection to the rear of the switch and battery holder.

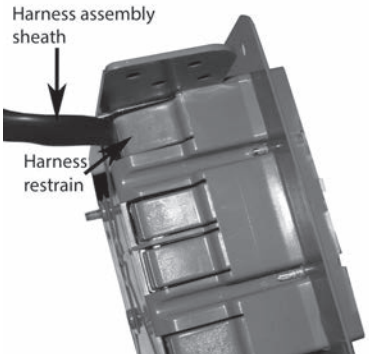

6. Secure the junction box to the mounting surface using appropriate fasteners (not supplied).
7. Align the molex connection on the switch cable of the harness assembly and connect to switch.

8. Mount the switch plate to the junction box with 2 screws provided. Note: Place the switch left or right to suit the homeowner wishes.

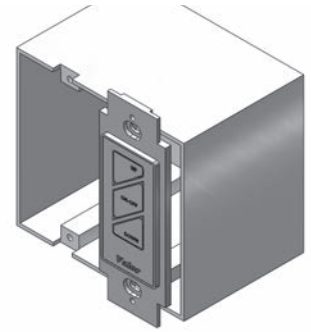

9. Locate and secure the magnet plates using 2 'long' screws provided.

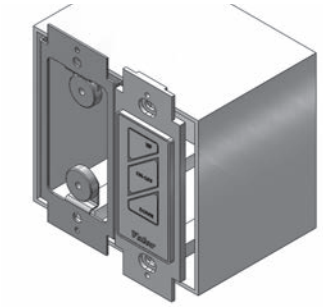

10. Place and secure the cover plate to the box using 4 screws provided.

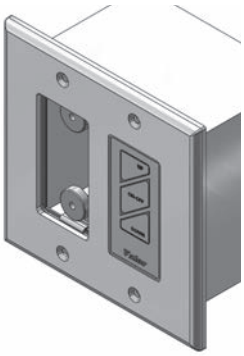

11. Feed the cable tie through the 2 side slots of the battery cover assembly.

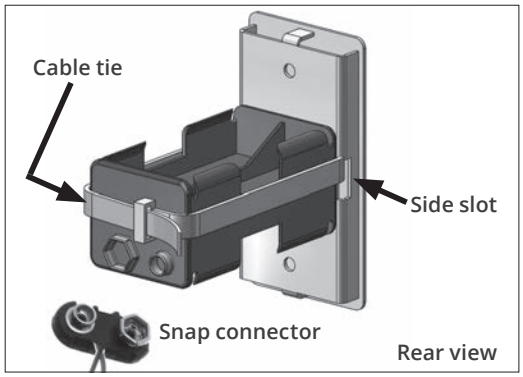

12. Position the battery holder to the rear face and secure together with a cable tie. Note that clearance is required for battery snap connection.

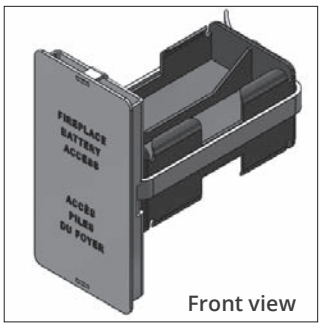

13. Make the snap connection, load 4 AA alkaline batteries into the holder (included with fireplace) then feed back into the junction box assembly. **Note: Do not put batteries in the receiver, only in the battery holder by the wall switch.**

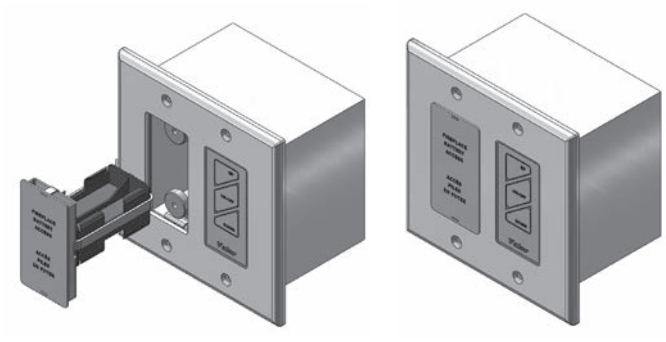

14. Test the operation of the wall switch—see *Appendix C - Wall Switch Operation* on page 66.

⚠ Caution

DO NOT PUT BATTERIES IN THE BATTERY HOLDER until the wires are connected to the receiver as short-circuit could result in the destruction of the electrical components.

DO NOT USE a screwdriver or other metallic object to remove the batteries from the battery holder or the handset! This could cause a short-circuit to the receiver.

DO NOT RUN the switch wire over the top of the firebox. Route the wire so it does not contact the firebox.

To avoid short-circuit to the receiver, position the antenna so that it DOES NOT TOUCH the ignition wire.

Liners

Ceramic Liners: The ceramic liner panels consist of three rear sections in one carton and one end panel in a separate carton. The three sections are fitted into each other. Two of the sections are identical. Their step edges go towards the middle to fit into the middle section.

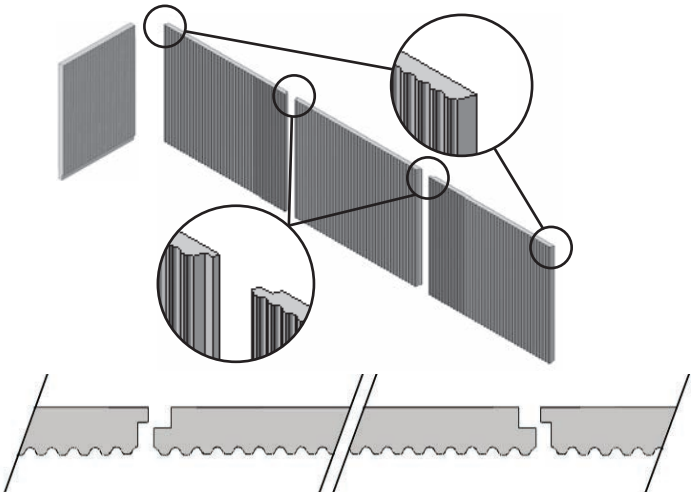

Ceramic liner panel sections—top view

Glass Liners: The glass liner panels consist of three identical rear sections in one carton and one end panel in a separate carton.

The Glass Liners install in the same manner and order as the ceramic panels; however they don't fit into each other. They sit beside each other

Installation

1. Unpack the liner panels carefully.
2. Remove the rear media tray (3 screws).

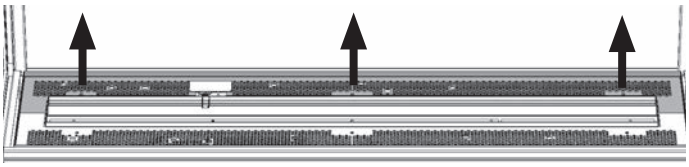

3. Inside the firebox, at the rear of the top panel, and on the closed side of the firebox, release the screw of the 4 panel supports and slide the supports towards the middle of the firebox.

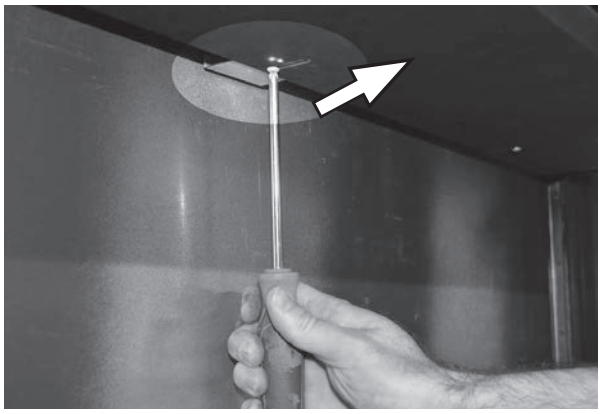

4. Place the end panel, notch at the top, against the side wall of the firebox and rest it on the ledge. Slide the panel towards the front of the firebox.

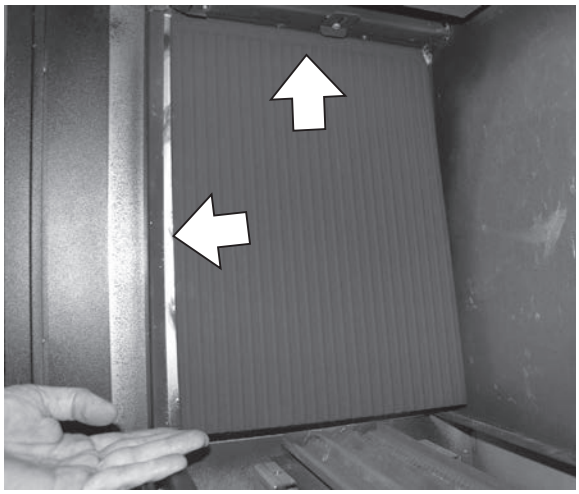

5. Place one rear end panel, top first, against the back wall of the firebox, square edge outward and step edge in the center. Slide the panel outward so it is held behind the mounting support.

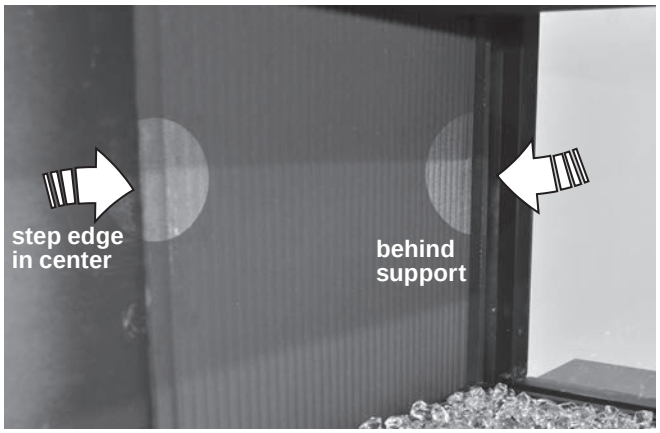

6. Repeat with the other end panel.
7. Fit the center panel with its step edges overlapping both end panels.

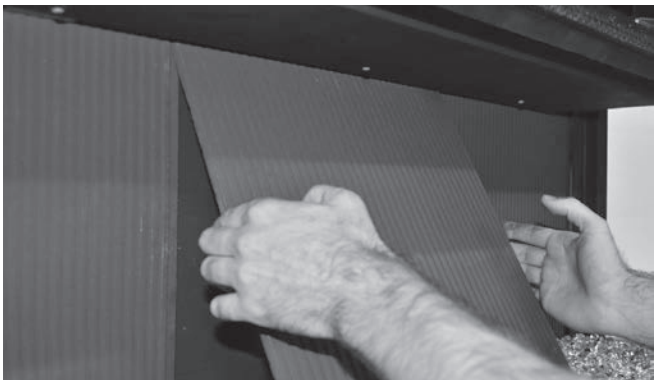

8. Slide the end panels towards the center and slide the firebox end panel against the rear to eliminate any gaps between them.

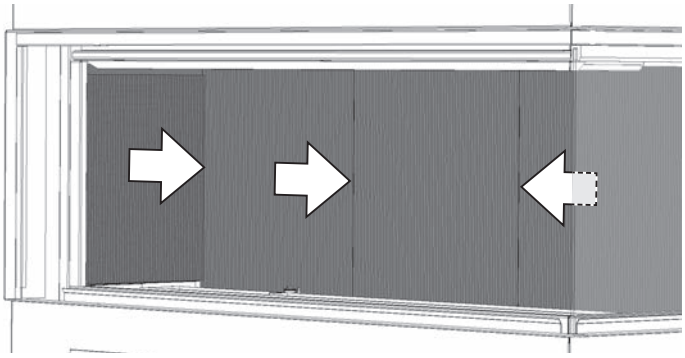

9. Ensure all panels are square against the back wall of the firebox.
10. Push the 3 panel supports against the top of each section and tighten the screw.

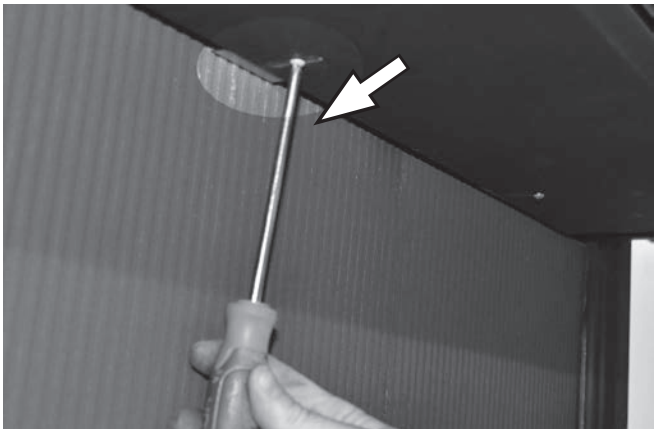

11. Two brick retainers and three glass retainers are supplied with the panels. They are used to hold the bottom of the rear panels against the rear wall of the firebox. The brick retainers have a shallower return and the glass retainers have a deeper return.

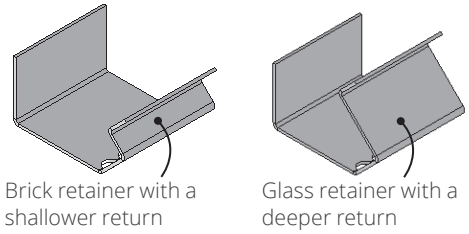

12. Hook one retainer to the edge of the flange. Then, squeeze together, with your fingers or a tool, the top and bottom parts of the retainer to fold it over the flange where the ceramic panel sits.

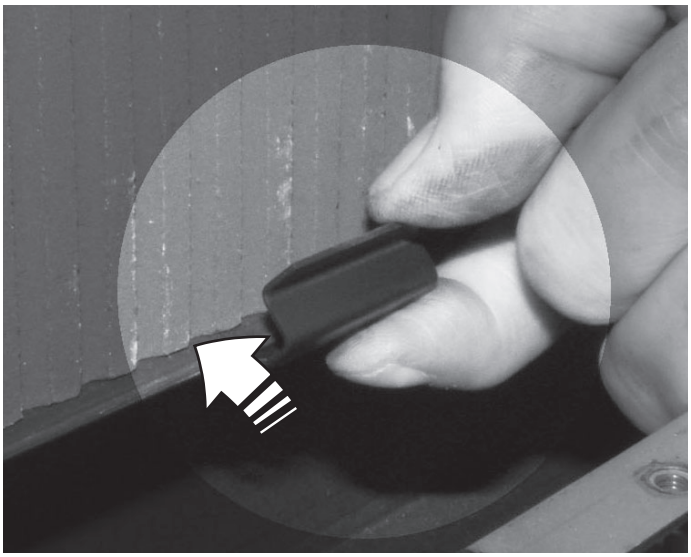

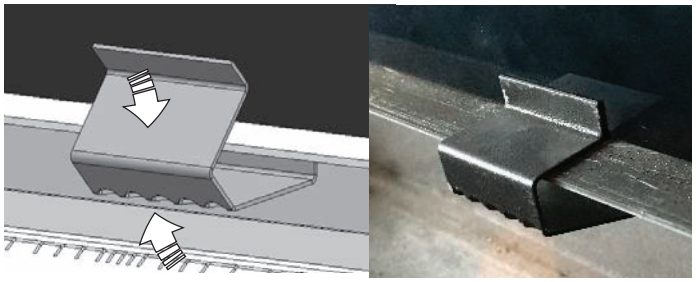

13. Repeat with the other panels retainers.
14. Re-install the rear media tray (3 screws).

Birch Kit 1705BLKV2

Material required

- Driftwood Kit containing:
  - 9 logs
  - 2 support pieces
  - 1 bag of embers

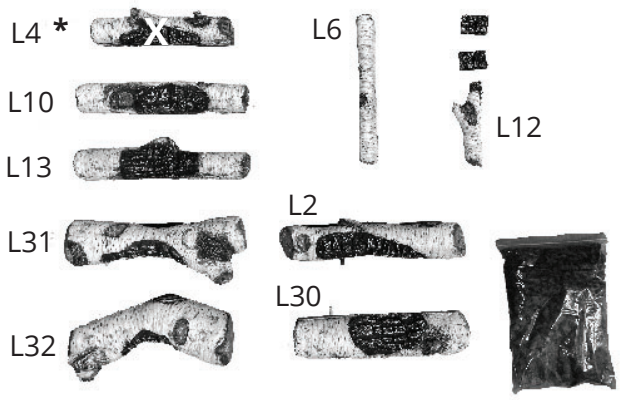

NOTE

* This log set is shared with other fireplaces. The log L4 is not used in this installation.

NOTE

Use of this log set may increase the possibility of soot formation when air shutters are set to the minimum setting. Although LX2 fireplaces are fitted with a minimum air shutter stopper intended to prevent sooting with most log sets, it is possible some sooting may occur when using this log set and the air shutter is set to minimum position.

Evaluate the flame picture carefully after the unit has warmed up for fifteen minutes, and avoid setting the air shutter to minimum when there is limited rise in the venting system or the flame appears overly luminous and lazy with smoke trailing off the flame tips.

Refer to *Check Operation* on page 53 for more information.

Installation

1. Carefully unpack the kit, as the logs are fragile. **Log L4 is not required for LX2 installation.**
2. Place log L30 at left end of the platform, resting the right hand end on the pilot shield. Do not let the end of the log touch the glass/left hand wall.

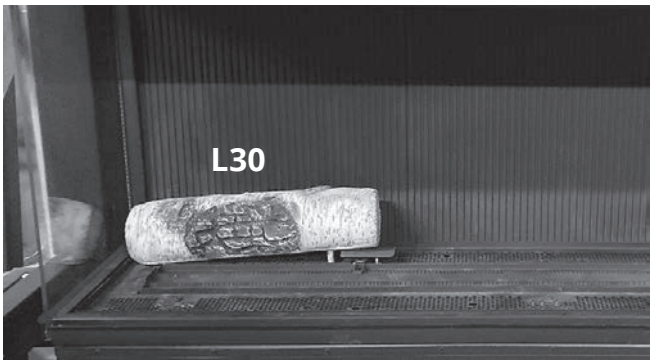

3. Place log L2 on top of L30, with the pin inserted into the hole as shown.

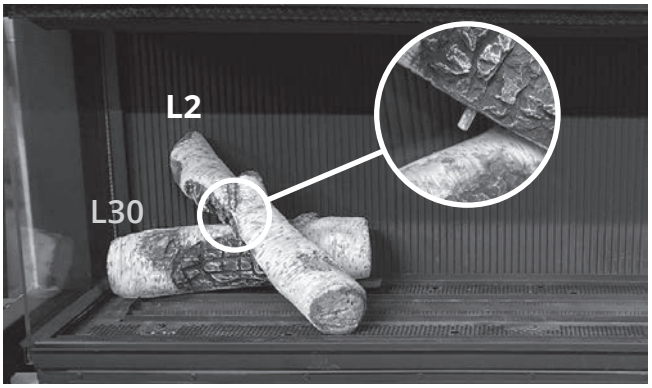

4. Place log L12 on the front left corner of the platform, just in front of the burner edge.

5. Place log L32 at the back right corner of the platform, partially covering the burner. The cutout on the bottom of L32 does not need to fit the burner's corner. Place a support piece under the left end of L32. L32 must not touch the glass/right wall.

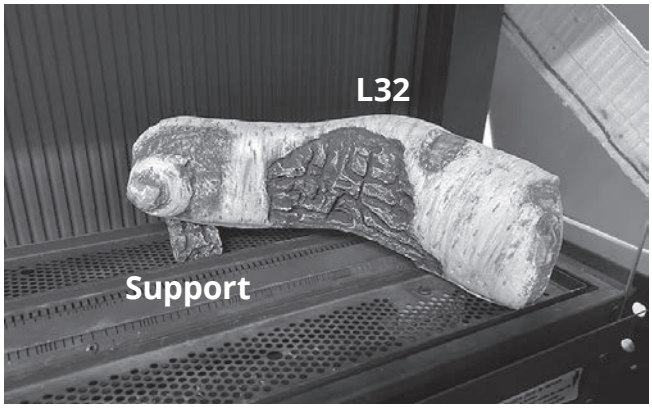

6. Place log L10 from the notch in L32 to the front of the platform.

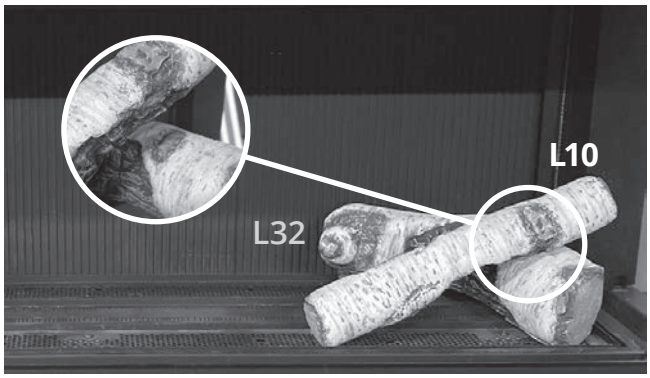

7. Center log L31 between the other logs, across the burner. Place a support piece under the front/right side of L31.

8. Place log L13 from the rear platform to the top of L31. It may rest against the rear wall.

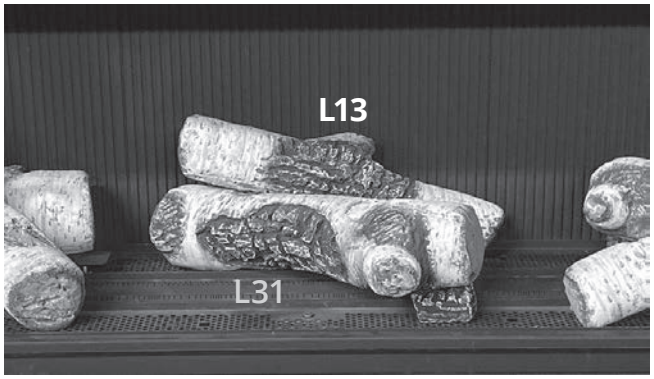

9. Place log L6 from the front platform to the groove on top of L31.

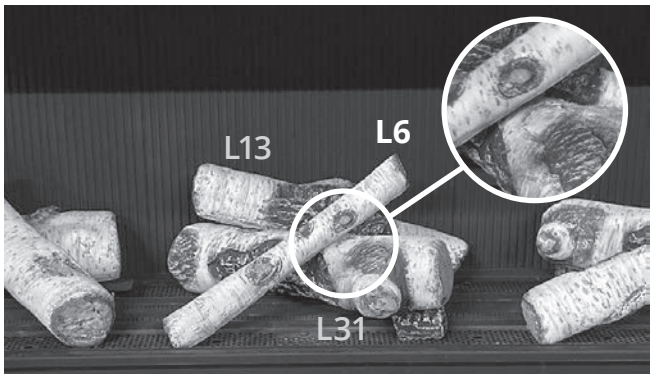

10. Place embers on burner and platform to preference.

1705BLKV2 - Complete LX2 Installation

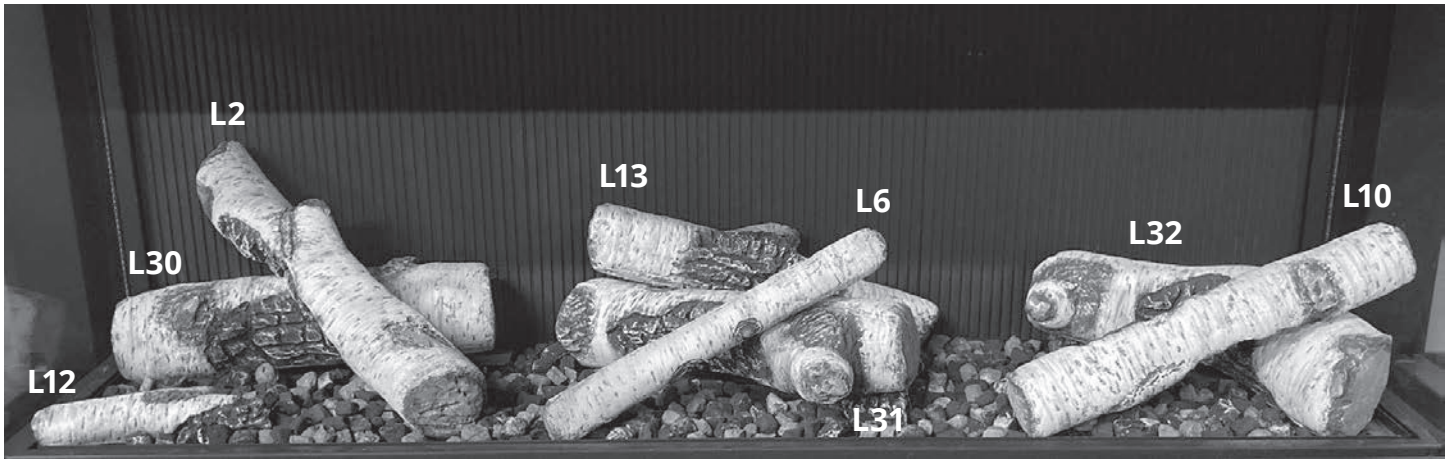

IMPORTANT

Use only the embers provided with your Valor fireplace. The use of any other types of material may void your fireplace warranty.

WARNING

Choking Hazard! Ensure that the fireplace area is clear of ember pieces as these could be ingested by small children. Vacuum area after installation.

Driftwood Kit 1705DWKV2

Material required

- Driftwood Kit containing:
  - 7 logs
  - 6 pebbles
  - 1 bag of vermiculite

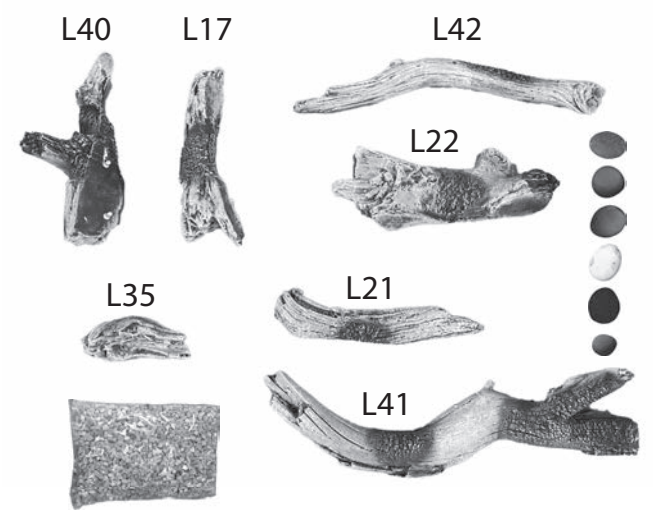

NOTE

Use of this log set may increase the possibility of soot formation when air shutters are set to the minimum setting. Although LX2 fireplaces are fitted with a minimum air shutter stopper intended to prevent sooting with most log sets, it is possible some sooting may occur when using this log set and the air shutter is set to minimum position.

Evaluate the flame picture carefully after the unit has warmed up for fifteen minutes, and avoid setting the air shutter to minimum when there is limited rise in the venting system or the flame appears overly luminous and lazy with smoke trailing off the flame tips.

Refer to *Check Operation* on page 53 for more information.

LX2 Installation

1. Carefully unpack the kit, as the logs are fragile.
2. Place (do not pour) vermiculite directly onto and around the burner, covering the platform. Keep the pilot hood and pilot safe zone clear of vermiculite.

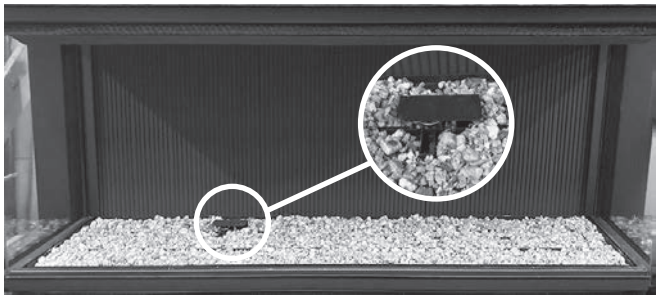

3. Clear the vermiculite from the pin holes shown at the left end of the rear platform, and then place log L40 with its two pins in the two holes.

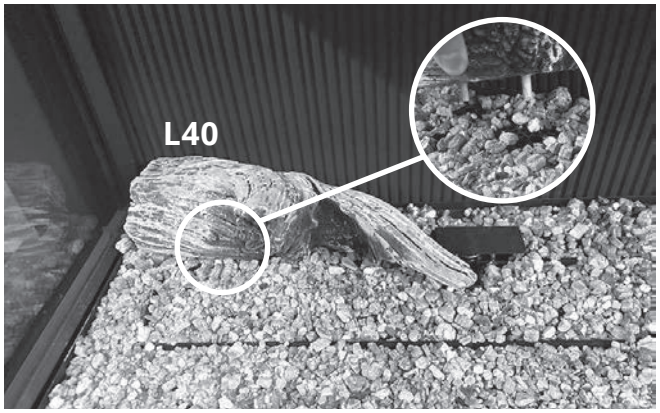

4. Place log L22 at the right end of the burner, on the rear corner of the burner itself. The log must not touch the glass or liner panel on the right hand side.

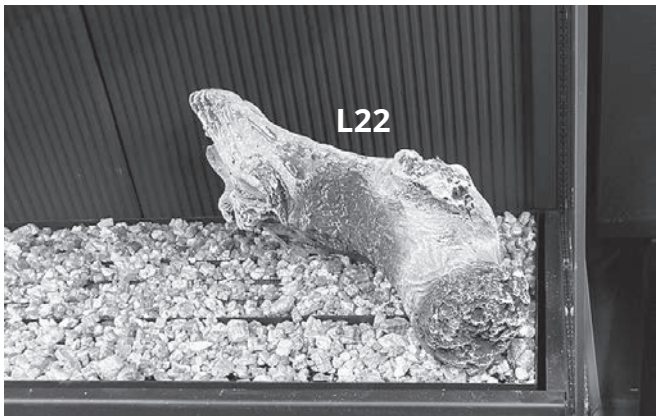

5. Remove the bottom pin from log L41, and place log L41 on the rear platform, centered between L40 and L22.

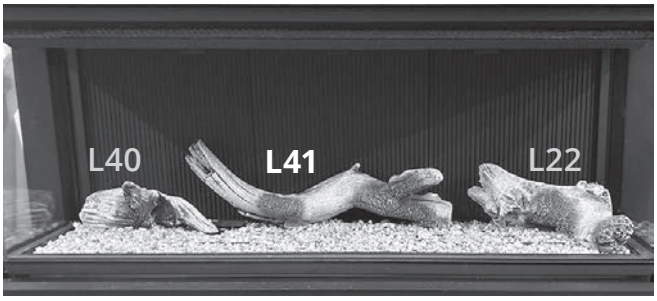

6. Place log L17 as shown, from the edge of the burner to the front platform.

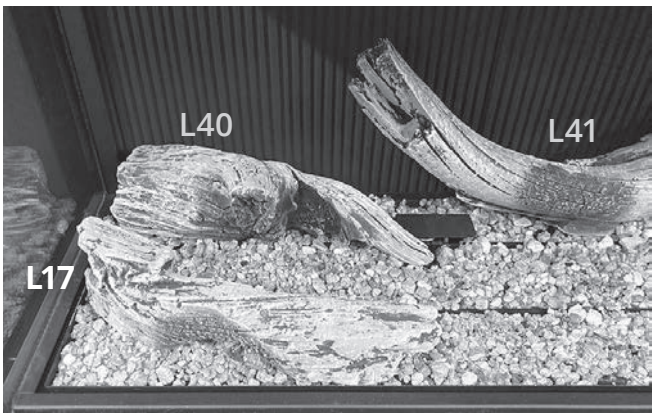

7. Place log L21 from the front side of the platform into the natural groove in log L22 as shown.

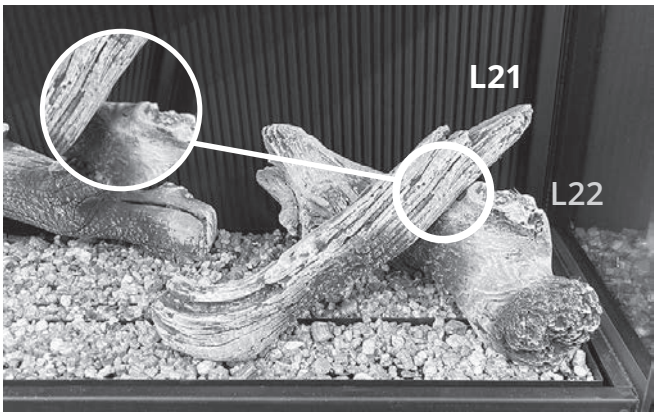

8. Place log L42 from the groove in log L41 to the front platform.

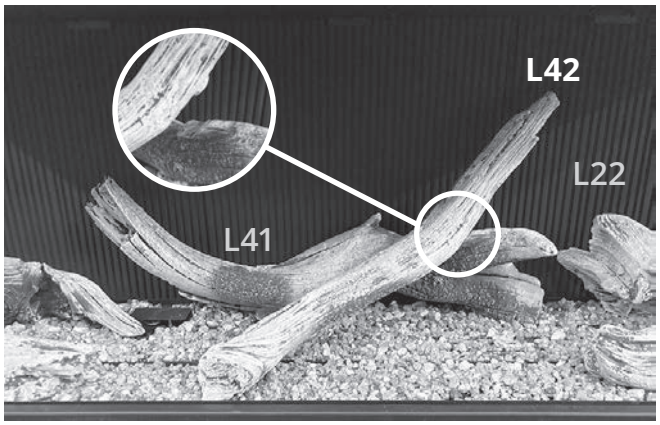

9. Place log L32 on the front platform as shown. It should not be resting on the burner.

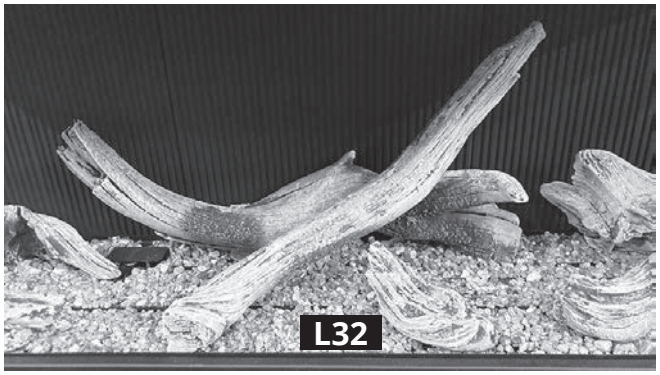

10. Place pebbles to taste around the installation. Do not place pebbles directly on the burner under the vermiculite.

1705DWKV2 - Complete LX2 Installation

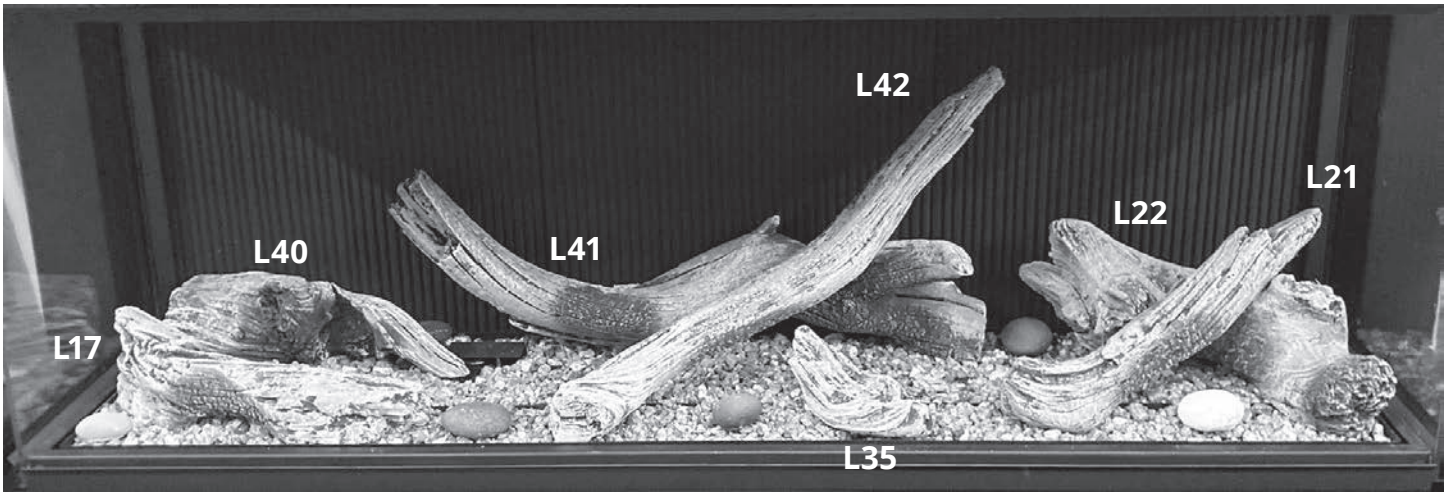

IMPORTANT

Use only the embers provided with your Valor fireplace. The use of any other types of material may void your fireplace warranty.

WARNING

Choking Hazard! Ensure that the fireplace area is clear of ember pieces as these could be ingested by small children. Vacuum area after installation.

Decorative Glass Murano 2200DGM

Material required

- Decorative Glass Murano kit, which contains:
  - 1 bag of clear fireglass
  - 2-piece glass platform
  - 8 ceramic pads

Installation

Carefully unpack the kit.

1. Install the 8 ceramic pads around the burner as indicated. The pads will raise the glass platform.

WARNING

CHOKING HAZARD! Ensure that the fireplace area is clear of fireglass particles as these could be ingested by small children. Vacuum area after installation.

IMPORTANT: Approved for use only with the fireglass provided with your Valor fireplace The use of any other fireglass products may void your fireplace warranty.

2. Install the front and rear glass platform, smooth side up, on the ceramic pads.

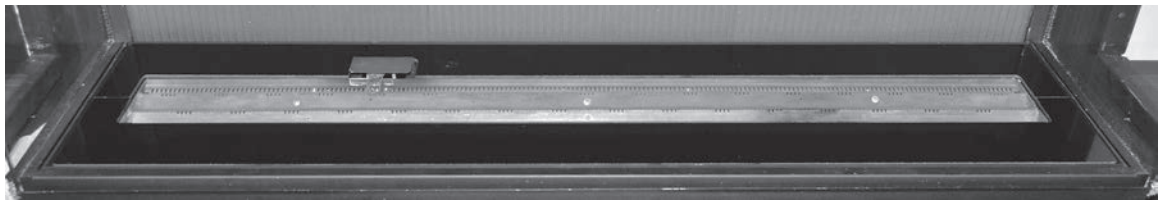

3. Carefully spread the fireglass by hand on the surface of burner forming a single layer to the level of the top edge of the flange around the burner. **Do not pour directly from the bag and do not pour too much to avoid blocking the burner ports.**
   NOTE: Ensure the areas ***within*** the pilot shield and pilot safe zone are clear of fireglass.

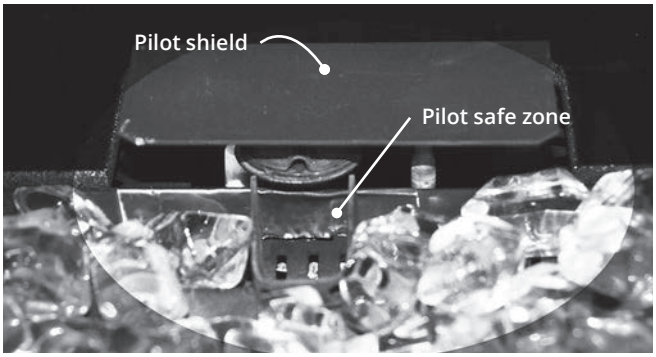

Decorative Glass Murano installed

Splitwood Kit 1705SWKV2

Material required

- Driftwood Kit containing:
  - 9 logs
  - 1 bag of embers

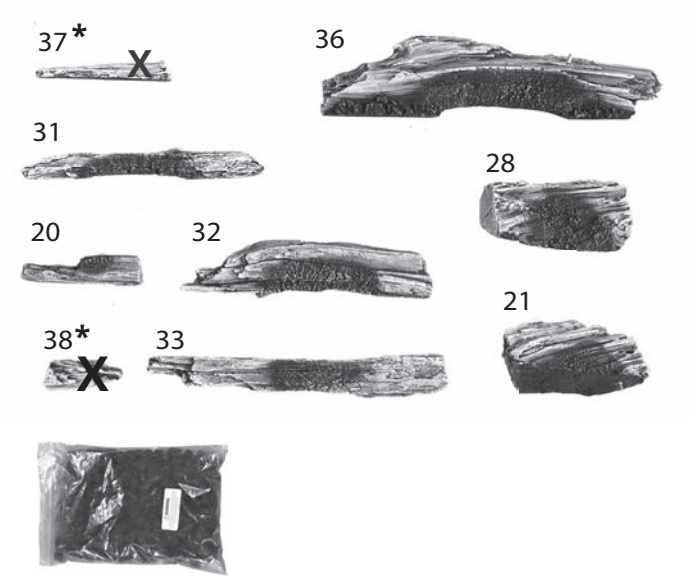

NOTE

* This log set is shared with other fireplaces. The logs 37 and 38 are not used in this installation.

NOTE

Use of this log set may increase the possibility of soot formation when air shutters are set to the minimum setting. Although LX2 fireplaces are fitted with a minimum air shutter stopper intended to prevent sooting with most log sets, it is possible some sooting may occur when using this log set and the air shutter is set to minimum position.

Evaluate the flame picture carefully after the unit has warmed up for fifteen minutes, and avoid setting the air shutter to minimum when there is limited rise in the venting system or the flame appears overly luminous and lazy with smoke trailing off the flame tips.

Refer to *Check Operation* on page 53 for more information.

Installation

1. Carefully unpack the kit, as the logs are fragile. **Logs 37 and 38 are not used for LX2 installation.**
2. Place log 21 as shown with the pin in the platform hole.

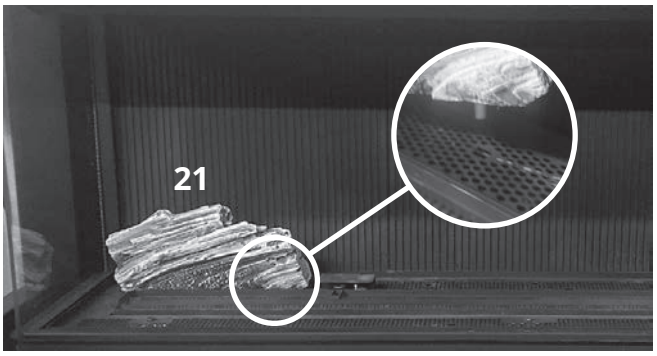

3. Place log 31 into the notch on top of 21 and across the burner to the front of the platform.

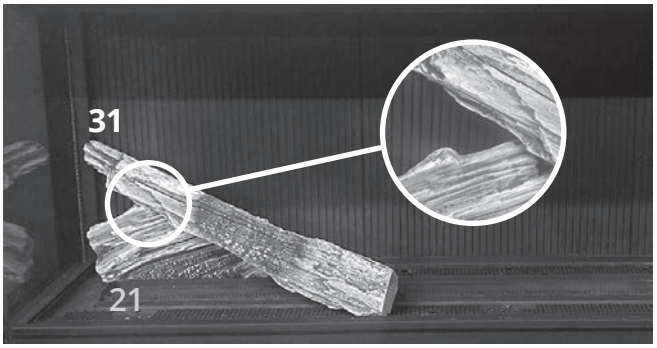

4. Place log 20 on the front left platform.

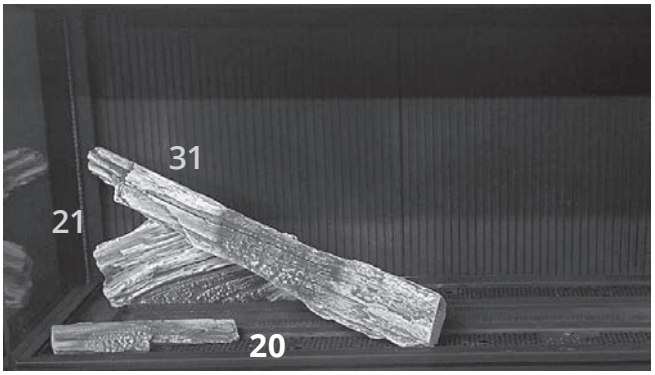

5. Place log 36 at rear of platform. It may touch the rear wall. It should just lightly touch the side of the pilot hood.

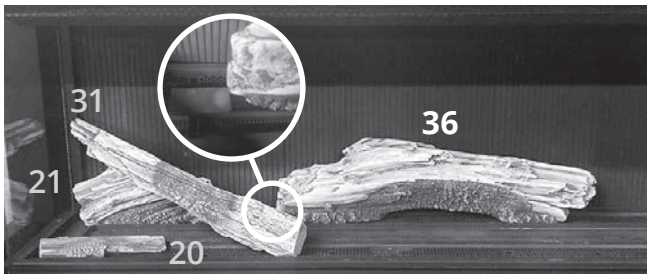

6. Place log 32 with its hole on the pin standing up from 36, across the burner to the front platform.

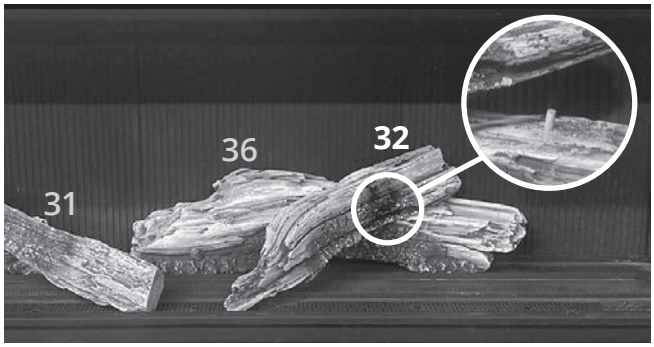

7. Place log 28 at the right end of the platform. The right angle cutout on the bottom of the log does not need to fit the burner. The log should not touch the right hand liner/glass.

8. Place log 33 from the notch on top of 28 to the front platform.

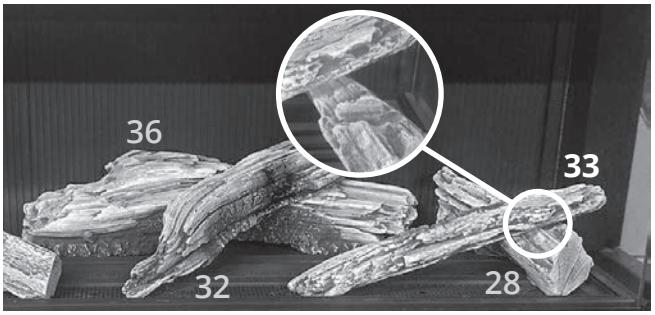

9. Place (do not pour) embers around the placed logs, covering the burner and platform.

1705SWKV2 - Complete LX2 Installation

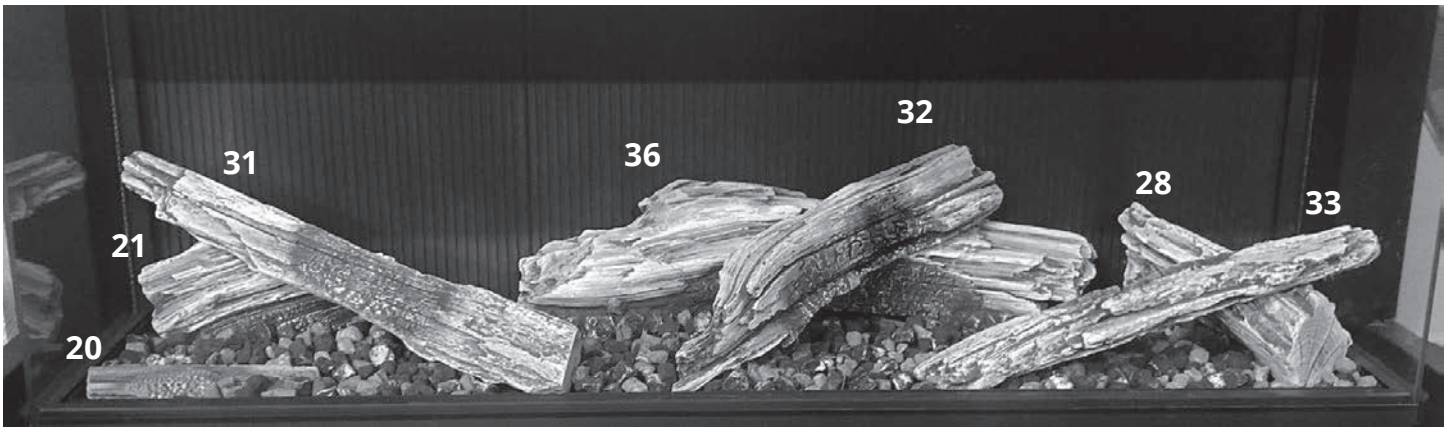

IMPORTANT

Use only the embers provided with your Valor fireplace. The use of any other types of material may void your fireplace warranty.

⚠ WARNING

Choking Hazard! Ensure that the fireplace area is clear of ember pieces as these could be ingested by small children. Vacuum area after installation.

Rocks & Shale Set 1714RSS

Material required

- Rock & Shale Set, which contains:
  - 1/2lb-bag of 3/4" grey shale
  - 1/2lb-bag of 3/4" black shale
  - 5 twigs
  - 34 rocks

Installation

Carefully unpack the kit.

1. Mix the black and grey shale pieces and spread them by hand in one layer thick on top of the burner. **Do not pour from the bag and do not overfill to avoid blocking burner ports!**

NOTE: Ensure the areas ***within*** the pilot shield, on the pilot shield and in pilot safe zone are clear of shale. **Do not put rocks on the pilot shield!**

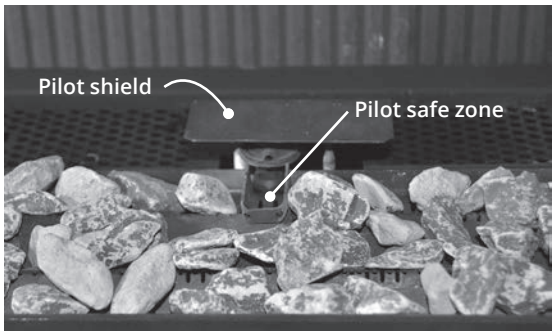

2. Place rocks around the shale bed as indicated. These rocks will be used to support the twigs. The rocks used is not important.

3. Place the twigs on the rocks as shown.
   Note: The position of the twigs are specific to obtain the best flame pattern. The twigs should not rest flat on the shale bed. Their position across the shale bed allows some air underneath.
   a. Place the one of the curvy twigs as indicated.

   b. Place a short Y twig on the rocks behind the pilot shield; rest the other end on the shale bed.

c. Place the long Y twig as indicated.

d. Place the other short Y twig as indicated.

e. Place the other curvy twig as indicated.

WARNING

CHOKING HAZARD! Ensure that the fireplace area is clear of shale pieces as these could be ingested by small children. Vacuum area after installation.

IMPORTANT: Approved for use only with the ceramic rocks, twigs and shale provided with your Valor fireplace The use of any other products may void your fireplace warranty.

4. Install the remaining rocks around the shale bed. **Do not put any rock on the pilot shield! Do not put rocks on the shale!**
   The acceptable variations are only for rocks installed outside of the shale bed.

Suggested positions for additional rocks around shale bed

Lighting

This appliance is equipped with decorative lighting located above the fuel bed.

Test this overhead lighting before completing installation (see *Appendix B - Remote Control Operation* on page 61). If any of the bulbs are out, replace them using the following steps.

Required Bulbs

The light bulbs in the LX2 are 120V, 20W bi-pin (JC) halogen bulbs GY6.35. A total of 3 are installed in the unit.

Remove Barriers and Windows

Changing the light bulbs requires access to the inner firebox. See *Window Sill & Window* on page 28 for details on removing the windows from the fireplace.

Change Bulbs

Wear gloves when changing these bulbs. Most manufacturers recommend never touching them as oil from your skin can shorten their life.

1. Gently pull the bulb out of the receptacle in the lighting rail.
2. Replace with a new bulb. Be careful to align pins with the receptacle holes.
3. Test the lighting with the remote control handset before replacing windows (lighting can operate independent of main fire being on or off).
4. Reinstall windows and barrier screens following steps in section *Window Re-Installation* pages 49 pages 50.

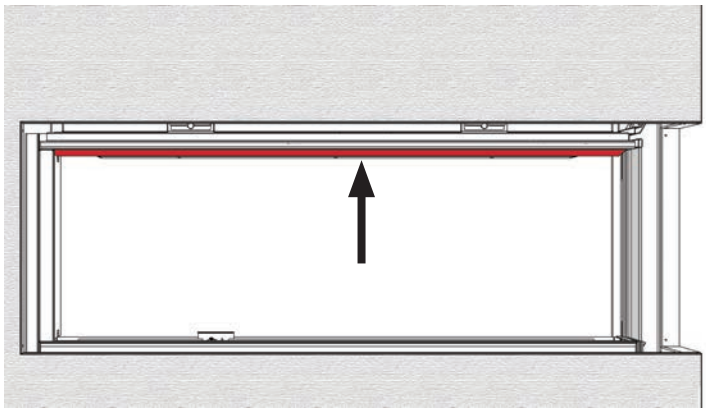

Lighting rail on both sides, just behind window

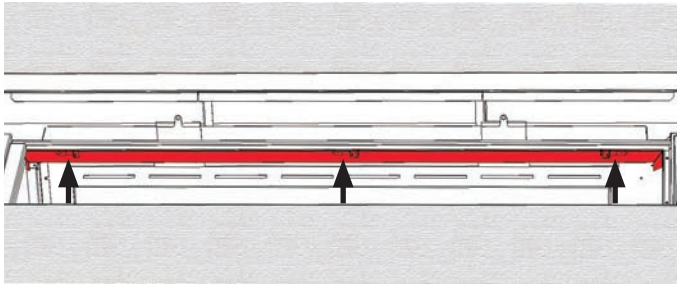

Position of 3 light bulbs looking up in the firebox

Window Re-Installation

To refit the window:

1. Remove any fuel bed media particle from the window bottom rail before installing the window.
2. Ensure the gasket is well fitted to the bottom of the window pane.
3. Insert the window behind the appliance's front panel and lower it into its bottom rail.

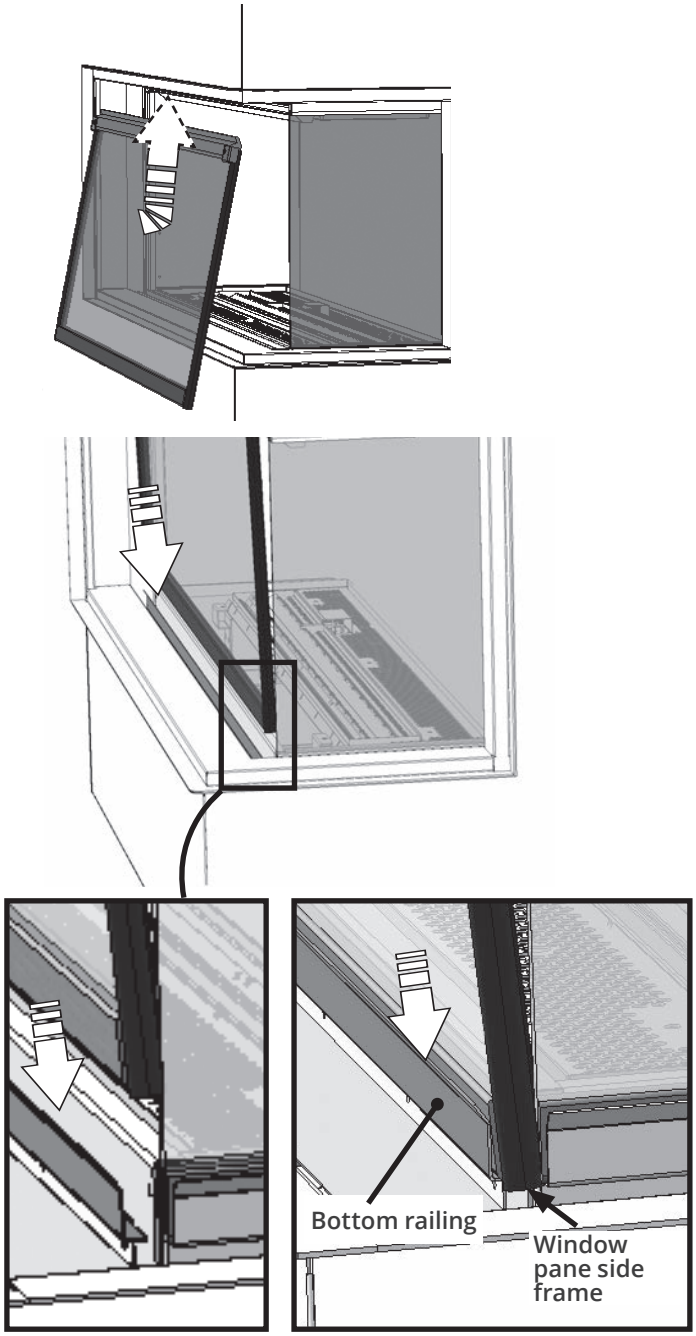

⚠ WARNING

The window units must be correctly installed, fastened and sealed after servicing or serious bodily injury and/or damage to the fireplace may result.

To ensure safe operation:

- **Double-check that the bottom of each window frame is correctly installed in the bottom support railing;**
- **Verify that the retainer hooks are hooked properly to the top angle brackets;**
- **Pull out the top of each side window and release it to ensure the springs return it;**
- **Ensure the window is sealed before operation.**

⚠ WARNING

Failure to install the window correctly can:

- **cause carbon monoxide to leak.**
- **affect the performance of the fireplace.**
- **damage components.**
- **cause overheating resulting in angerous conditions.**

Damage caused by incorrect window installation is not covered by the Valor Warranty.

Installation

Window Re-Installation

4. Push the top of the window pane against the fire-box. **Ensure it is centered on the firebox so it seals properly.**
5. While you hold it, pull down and hook one of the spring-loaded levers onto the window top black frame using the door handle. Repeat with the other lever.

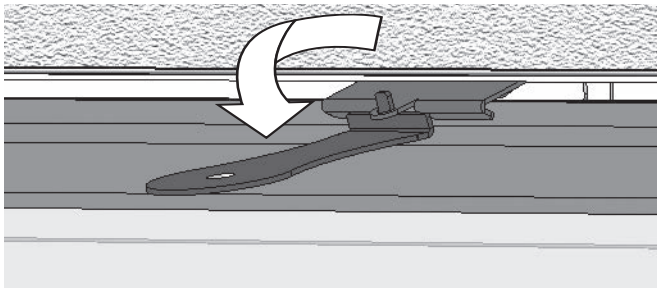

6. Apply firm hand pressure around the window pane **particularly on the top and sides** to ensure the window is sealed tight against the firebox.
ENSURE THE FRONT WIN-DOW'S SILICONE GASKETS ARE WELL SEALED, FROM TOP TO BOTTOM, TO THE SIDE WINDOWS!

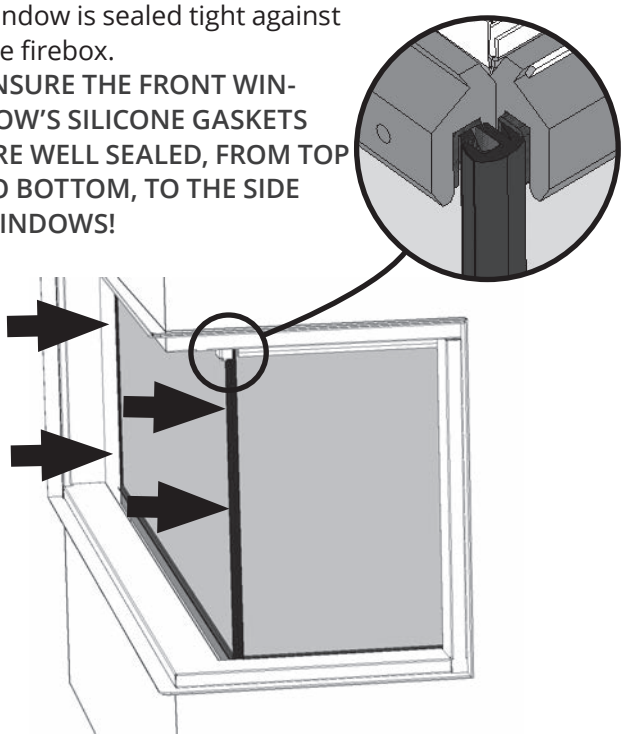

7. **If the Hot Glass Warning plate has been removed from the front lower corner of the window, re-install it by sliding it between the glass and the frame as indicated.**

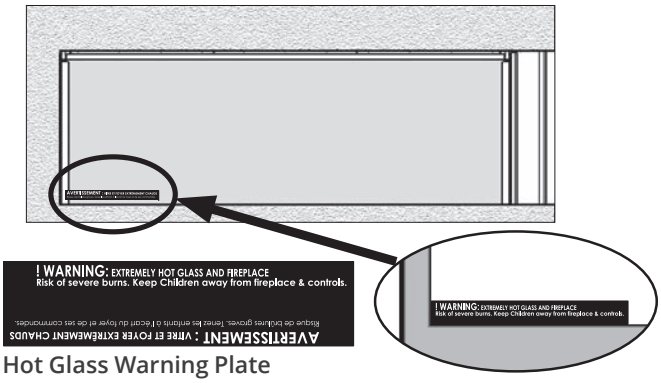

Hot Glass Warning Plate

⚠ WARNING

For safety purposes, make sure the barrier screen is re-installed on the fireplace front after maintenance.

Pair Remote Control Receiver to Handset

The receiver and the handset of the remote control system must be initially synchronized before the first use. The receiver is located on the bottom of the fireplace behind the front panel under the valve heat shield. The battery holder is located next to the wall switch.

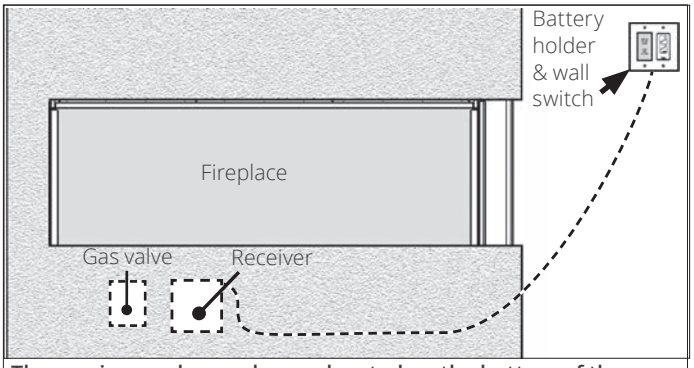

The receiver and gas valve are located on the bottom of the fireplace behind the front panel under the valve heat shield. The battery holder is located next to the wall switch.

1. Insert two 1.5 V AAA **alkaline** batteries in the handset.
2. Behind the front panel of the appliance, slide the valve heat shield to the right and locate the receiver. Detach it from the Velcro and pull it out.

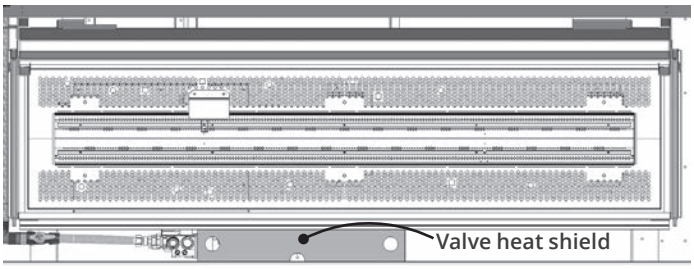

Top view—Valve heat shield closed

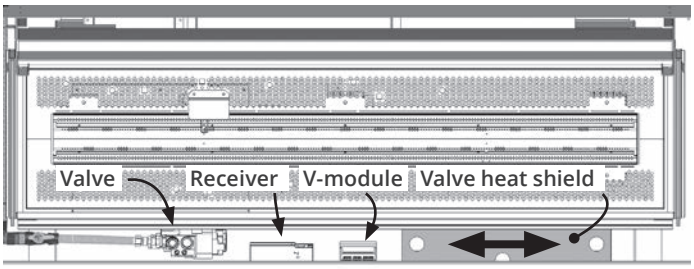

Top view—Slide valve heat shield opened

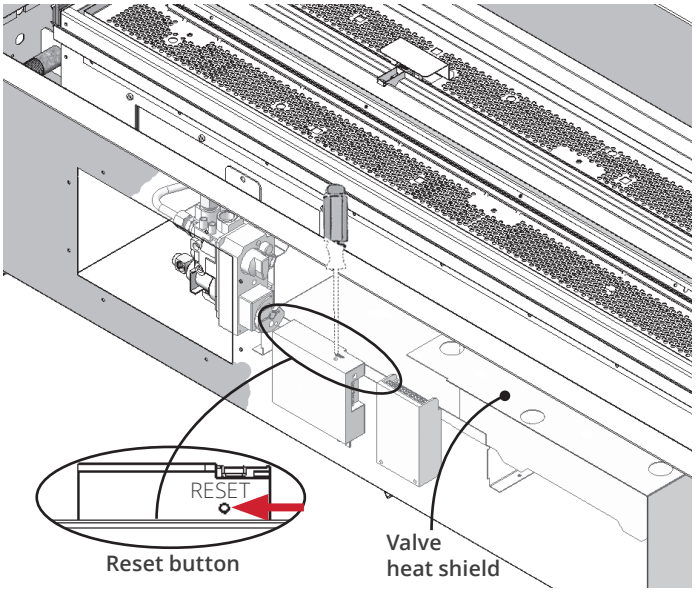

3. Locate the Reset button on the top side of the receiver.
4. With a thin object, press and hold the receiver's RESET button until you hear one short and one long beeps. After the second beep, release the reset button.
5. Within the subsequent 20 seconds, press and hold the ▼ button on the remote handset for 2-3 seconds. COM will be displayed on the handset during the pairing sequence. You will hear two short beeps confirming the pairing is done.

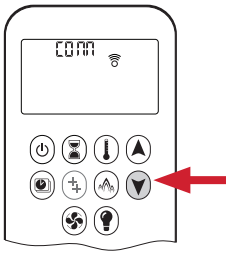

If you hear one long beep, the pairing sequence has failed or the wiring is incorrect.
This is a one time pairing only and is not required when changing the batteries of the handset or battery holder. The remote control system is now ready to use.

6. Put the valve heat shield back in place, over the valve, receiver and v-module.

⚠ WARNING

ALWAYS PUT THE VALVE HEAT SHIELD BACK IN PLACE over the valve, receiver and v-module! Otherwise, the controls can overheat and the fireplace stop working.

Install Remote Control Handset Wall Holder

The remote control kit for this fireplace comes complete with a wall-mounted holder. This holder is not required in all installations but is provided as an optional feature for those customers who wish to mount the remote handset to the wall.

To install the holder to the wall, find a convenient location and use the hardware provided with the kit. Cover the screws with the included caps to finish the mounting.

Once mounted, the holder is magnetic - simply place the remote gently into the holder.

IMPORTANT: The location of the remote control handset is important to assure proper temperature regulation. To obtain a constant temperature, we recommend that the handset should be **between 3 and 15 feet away from the appliance but not directly above it**. We also advise that the handset should be located away from any other heat source and not in direct sunlight as this may affect the temperature sensor located in the remote handset.

Check Operation

Turn the fireplace flame up and down using the remote control to confirm that the full range of inputs is achieved—see the remote control operation instructions in Appendix.

Set Aeration (if necessary)

Light the fire and allow the unit to warm up for 10–15 minutes to evaluate the flame picture. The burner is equipped with an adjustable shutter to control primary aeration. The shutter is factory-set to an aeration gap which will give optimum performance for the vast majority of installations.

Depending of fuel bed used, altitude and other considerations, the flame picture may be improved by adjusting the aeration. The need for adjustment should be determined only by operating the appliance with the fuel bed, liners and window installed and evaluating the flame picture after a 15-minute warm-up.

Increasing aeration will cause the flames to appear more transparent and blue showing more ceramic effects glow.

Decreasing aeration will cause the flames to appear more yellow or orange showing less ceramic effects glow.

Too little aeration may result in black carbon forming on logs or roof panel and dropping into the firebox. May also result in carbon or soot stains on the vent termination and exterior wall around the termination! The Manufacturer is not responsible for for any damage caused by an air shutter setting with too little aeration.

To access the air shutter, remove the barrier screen and the base plate. The air shutter lever is located in front of the firebox behind the appliance front panel. Adjust the shutter by using a screwdriver as a lever to slide the shutter left or right.

Air Shutter

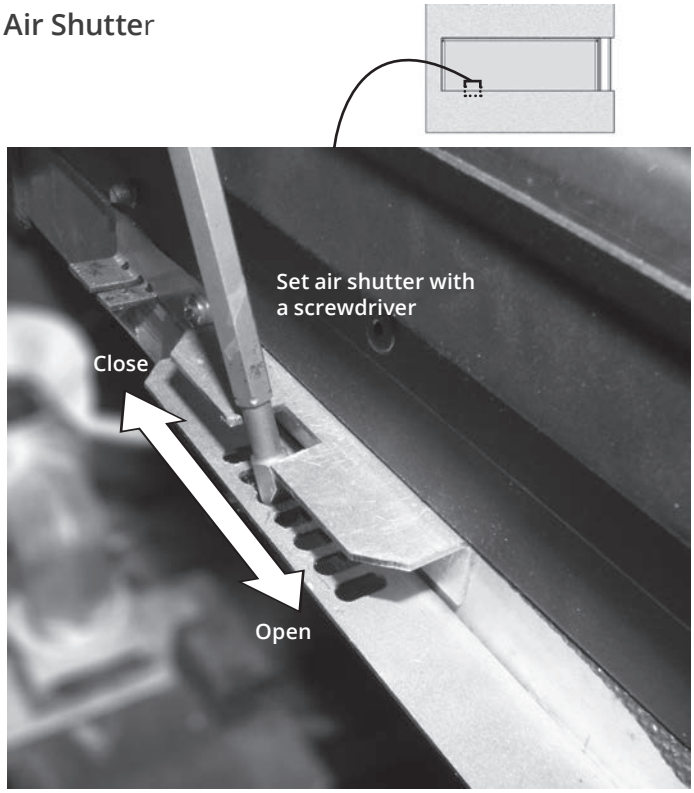

Reinstall Window Sill

1. Place the window sill on the fireplace's flange with the **magnets behind the fireplace's front panel**.

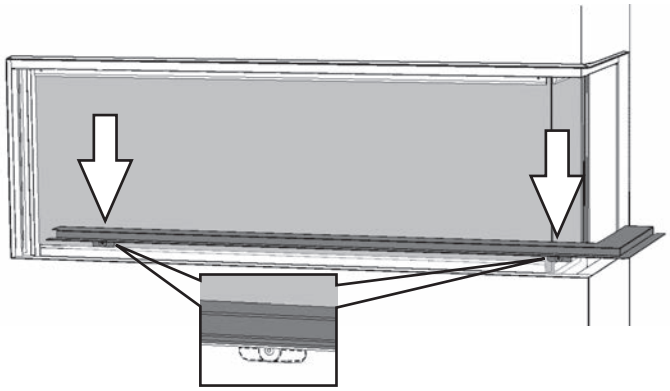

2. Push the sill down ensuring that the **magnets underneath slide behind the fireplace's front panel**.

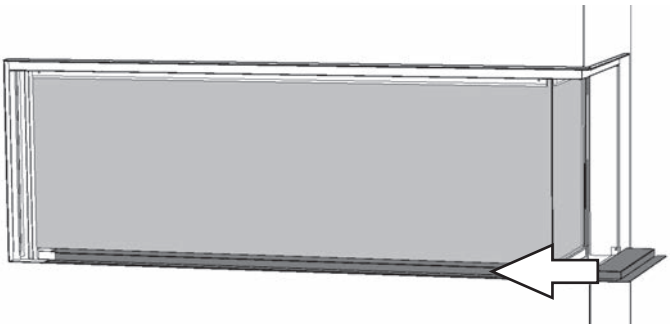

3. Pull the sill forward so it is flush with the fireplace's front flange.

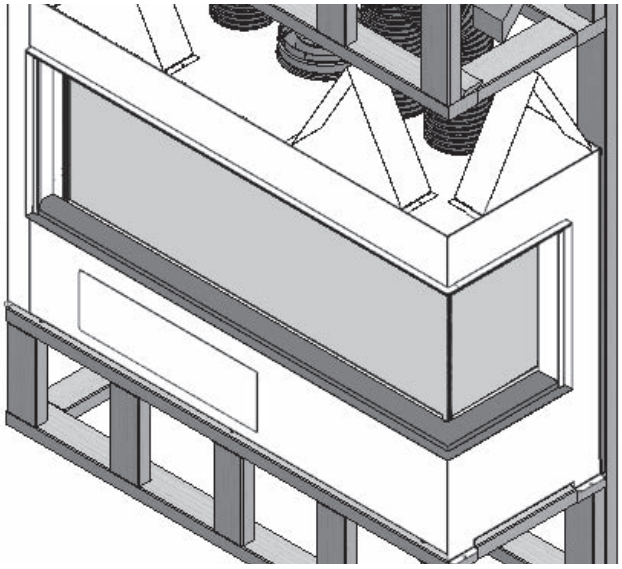

Install Barrier Screen

1. Place the side screen on the window sill of the appliance opening, magnets inboard against plate flange. Push top against top plate flange.

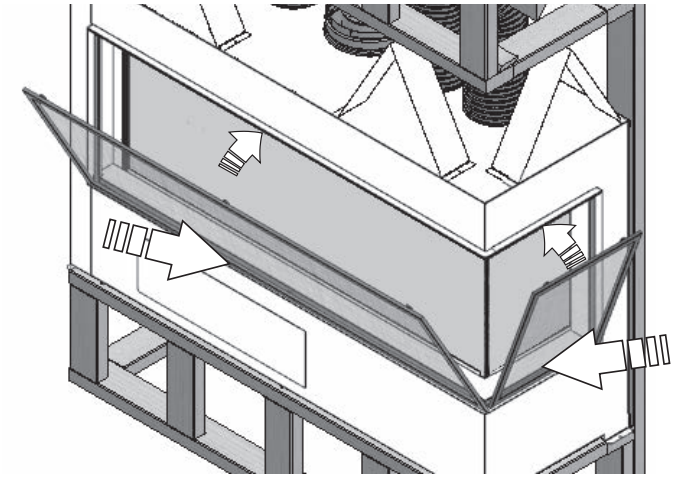

2. Place the front screen, magnets inboard, against the ridge of the window sill; push the top of the screen against the ridge of the top plate. The front screen frame overlaps the side screen.
3. Ensure that the screens are secure.

⚠ WARNING

For safety purposes, make sure the barrier screen is installed on the fireplace.

Wiring Diagram

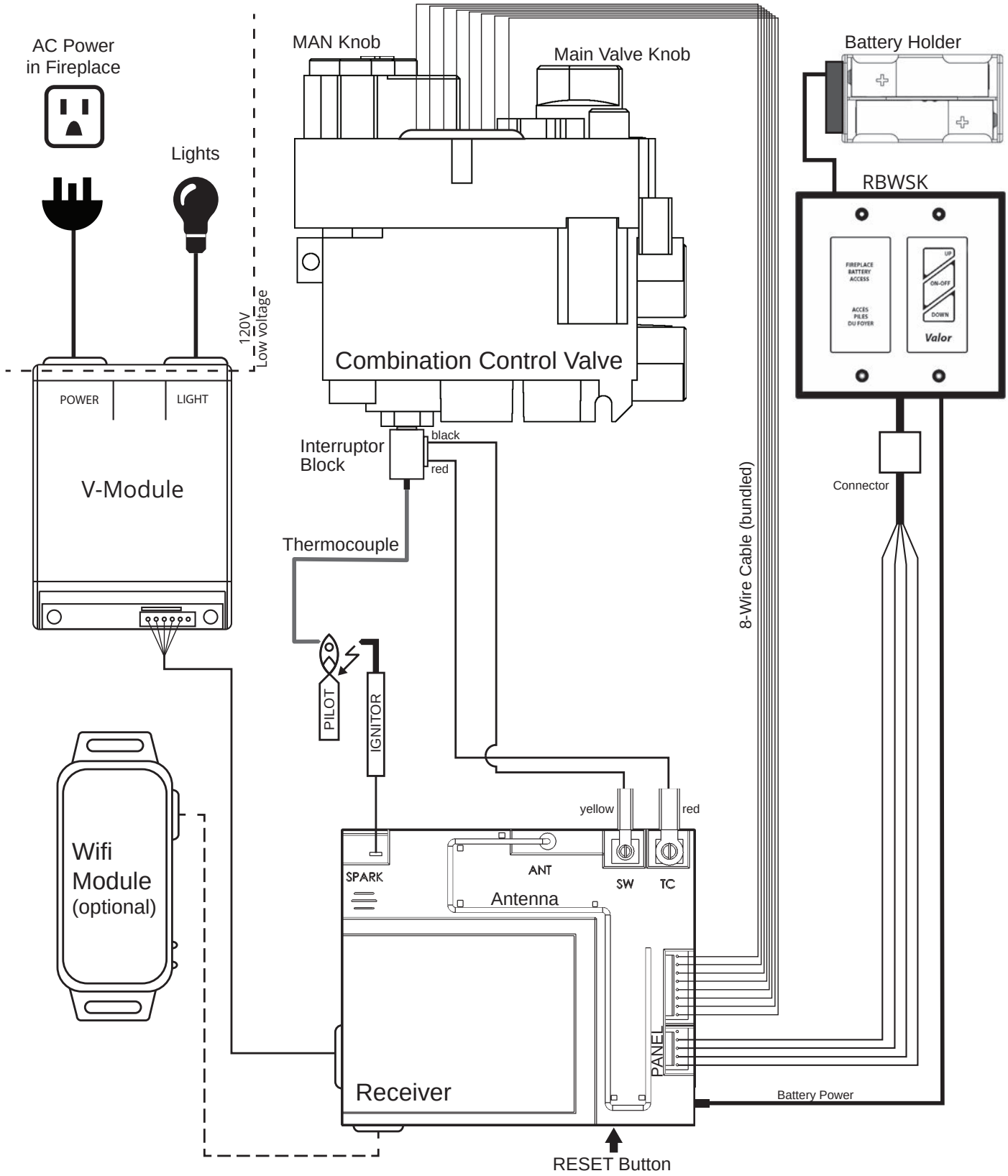

LX2 Series Wire Diagram

Commonwealth of Massachusetts

State of Massachusetts Carbon Monoxide Detector/Vent Terminal Signage Requirements

For all side wall horizontally vented gas fueled equipment installed in every dwelling, building or structure used in whole or in part for residential purposes, including those owned or operated by the Commonwealth and where the side wall exhaust vent termination is less than seven (7) feet above finished grade in the area of the venting, including but not limited to decks and porches, the following requirements shall be satisfied:

1. INSTALLATION OF CARBON MONOXIDE DETECTORS. At the time of installation of the side wall horizontal vented gas fueled equipment, the installing plumber or gas fitter shall observe that a hard wired carbon monoxide detector with an alarm and battery back-up is installed on the floor level where the gas equipment is to be installed. In addition, the installing plumber or gas fitter shall observe that a battery operated or hard wired carbon monoxide detector with an alarm is installed on each additional level of the dwelling, building or structure served by the side wall horizontal vented gas fueled equipment. It shall be the responsibility of the property owner to secure the services of qualified licensed professionals for the installation of hard wired carbon monoxide detectors.

a. In the event that the side wall horizontally vented gas fueled equipment is installed in a crawl space or an attic, the hard wired carbon monoxide detector with alarm and battery back-up may be installed on the next adjacent floor level.

b. In the event that the requirements of this subdivision can not be met at the time of completion of installation, the owner shall have a period of thirty (30) days to comply with the above requirements; provided, however, that during said thirty (30) day period, a battery operated carbon monoxide detector with an alarm shall be installed.

2. APPROVED CARBON MONOXIDE DETECTORS. Each carbon monoxide detector as required in accordance with the above provisions shall comply with NFPA 720 and be ANSI/UL 2034 listed and IAS certified.

3. SIGNAGE. A metal or plastic identification plate shall be permanently mounted to the exterior of the building at a minimum height of eight (8) feet above grade directly in line with the exhaust vent terminal for the horizontally vented gas fueled heating appliance or equipment. The sign shall read, in print size no less than one-half (1/2) inch in size, “GAS VENT DIRECTLY BELOW. KEEP CLEAR OF ALL OBSTRUCTIONS”.

4. INSPECTION. The state or local gas inspector of the side wall horizontally vented gas fueled equipment shall not approve the installation unless, upon inspection, the inspector observes carbon monoxide detectors and signage installed in accordance with the provisions of 248 CMR 5.08(2)(a)1 through 4.

(b) EXEMPTIONS: The following equipment is exempt from 248 CMR 5.08(2)(a)1 through 4:

1. The equipment listed in Chapter 10 entitled “Equipment Not Required To Be Vented” in the most current edition of NFPA 54 as adopted by the Board; and

2. Product Approved side wall horizontally vented gas fueled equipment installed in a room or structure separate from the dwelling, building or structure used in whole or in part for residential purposes.

(c) MANUFACTURER REQUIREMENTS - GAS EQUIPMENT VENTING SYSTEM PROVIDED. When the manufacturer of Product Approved side wall horizontally vented gas equipment provides a venting system design or

venting system components with the equipment, the instructions provided by the manufacturer for installation of the equipment and the venting system shall include:

1. Detailed instructions for the installation of the venting system design or the venting system components; and

2. A complete parts list for the venting system design or venting system.

(d) MANUFACTURER REQUIREMENTS - GAS EQUIPMENT VENTING SYSTEM NOT PROVIDED. When the manufacturer of a Product Approved side wall horizontally vented gas fueled equipment does not provide the parts for venting the flue gases, but identifies “special venting systems”, the following requirements shall be satisfied by the manufacturer:

1. The referenced “special venting system” instructions shall be included with the appliance or equipment installation instructions; and

2. The “special venting systems” shall be Product Approved by the Board, and the instructions for that system shall include a parts list and detailed installation instructions.

(e) A copy of all installation instructions for all Product Approved side wall horizontally vented gas fueled equipment, all venting instructions, all parts lists for venting instructions, and/or all venting design instructions shall remain with the appliance or equipment at the completion of the installation.

Appendix A - Lighting Instructions Plate

FOR YOUR SAFETY, READ BEFORE LIGHTING

WARNING: If you do not follow these instructions exactly a fire or explosion may result causing property damage, personal injury or loss of life.

A. This appliance has a pilot which must be lighted by hand or by remote control. Follow these instructions exactly. To save gas, turn the pilot off when not using the appliance for a prolonged period of time.

B. BEFORE LIGHTING, smell all around the appliance area for gas. Be sure to smell next to the floor because some gas are heavier than air and will settle on the floor.

WHAT TO DO IF YOU SMELL GAS

- Do not try to light any appliance.
- Do not touch any electric switch; do not use any phone in your building.
- Immediately call your gas supplier from a neighbor's phone. Follow the gas supplier's instructions.
- If you cannot reach your gas supplier**, call the fire department.**

C. Use only your hand to push in or turn the control knobs. Never use tools. If the knobs will not push in or turn by hand, **don't try to repair them; call a qualified service technician. Force or attempted repair may result in a fire or explosion.**

D. Do not use this appliance if any part has been under water**. Immediately call a qualified servi**ce technician to inspect the appliance and to replace any part of the control system and any gas control, which has been under water.

LIGHTING INSTRUCTIONS

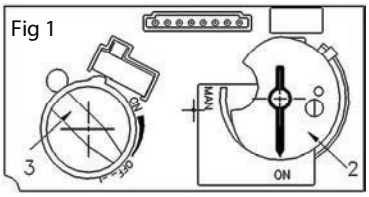

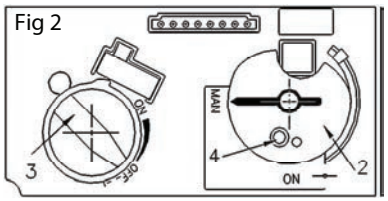

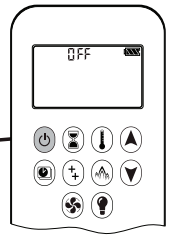

1. STOP! Read the safety information above

2. TO CLEAR ANY GAS, turn main valve off by pressing the button on remote handset (1). Wait five (5) minutes to clear out any gas, then smell for gas, including near the floor. If you smell gas,STOP! follow "B" in the safety information above on this label. If you don't smell gas, go to the next step.

3. AUTOMATIC IGNITION: MAN-knob (2) in ON position. Ensure Flame Adjustment knob (3) is set to lowest setting (Fig. 1). Locate the pilot (Fig. 3.) inside the firebox.
On the remote control handset, press the button; a short acoustic signal confirms the start has begun. Further short acoustic signals indicate the ignition process is in progress When the pilot is lit, the Flame Adjustment knob (3) will automatically rotate to the highest setting. Press the button on the remote control handset to reduce the flame height.

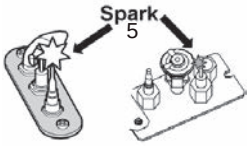

Fig 3

4. MANUAL IGNITION: MAN-knob (2) in MAN position (Fig. 2).
With the window off, locate the pilot (Fig. 3) inside the firebox. Set Flame Adjustment knob (3) to the lowest setting. Push down the metallic core (4) with a pen or similar instrument; this will establish the pilot gas flow. Light gas at the pilot (5) with a match. Continue holding down metal core (4) for about 10 seconds; after release, pilot should remain lit. If the pilot will not stay lit after several tries, turn the gas control knob (3) to OFF and call your local service technician or gas supplier. Reinstall the window and set the MAN-knob (2) to ON; turn Flame Adjustment knob (3) up or down manually or use the and buttons on the remote control handset to adjust the flame height.

TO TURN OFF GAS TO APPLIANCE

AUTOMATIC SHUT-OFF (using the remote control handset):
Press and hold the button on the remote control handset to shut-off the main burner gas flow.
Press the button on remote handset to shut-off the appliance, including pilot flame.

Appendix B - Remote Control Operation

Initial Pairing

Before using the remote control system for the first time, the receiver and the handset must be paired. See *Remote Control Set-Up* on page 51

Main Display and Remote Handset

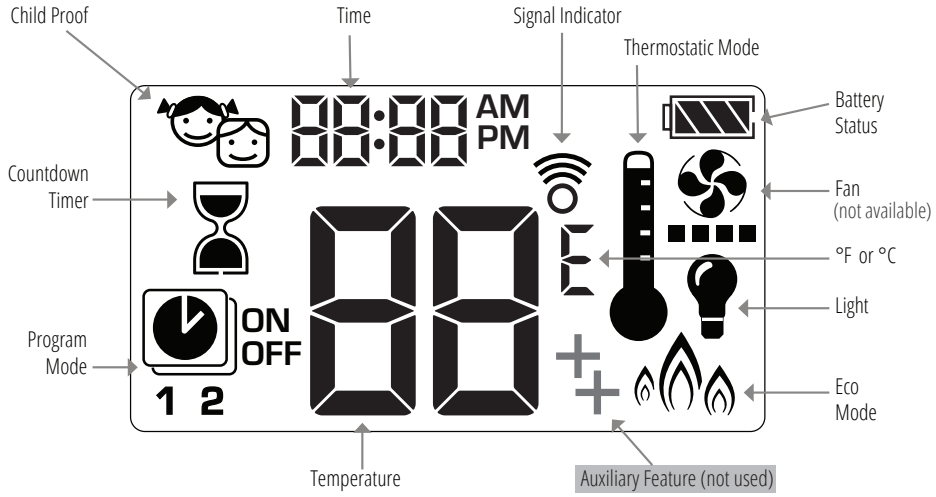

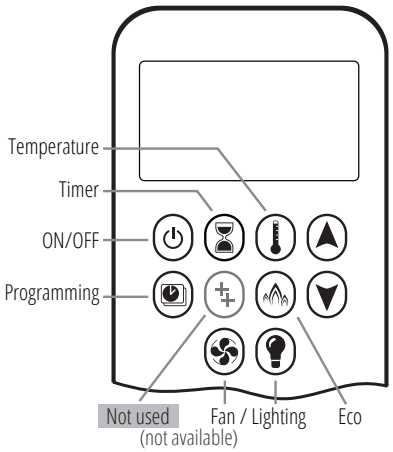

To Turn On Fire

> **NOTE:** When pilot ignition is confirmed, motor automatically turns to maximum flame height.

One-Button lighting (default): ⏻
Two-Button lighting: ⏻ + ▲ simultaneously

Press and hold for 4 seconds, until 8 short beeps and a blinking series of lines confirms the start sequence has begun. Release button.

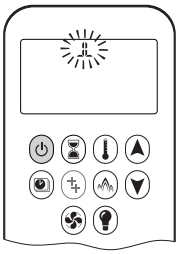

Main gas flows once pilot ignition is confirmed.

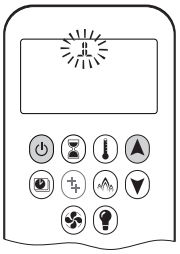

Handset automatically goes into manual mode after main burner ignition.

Standby Mode (Pilot Flame)

Press and hold ▼ to set appliance to pilot flame.

> ⚠ **CAUTION:** If the pilot does not stay lit after several tries call your local service technician or gas supplier.

To Turn Off Fire

Press ⏻ to turn OFF.

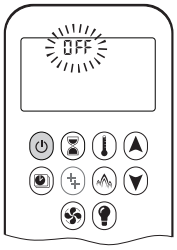

Note: There is a 2 minute delay after switching off before the next ignition is possible.

> ⚠ **CAUTION:** Always check the fire and pilot visually to ensure they are off.

Flame Height Adjustment

To increase flame height, press and hold ▲.

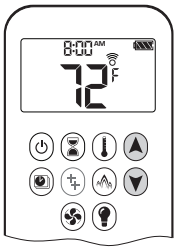

To decrease flame height, press and hold ▼. You may hold the button down until the fire is set to pilot flame only.

Appendix B - Remote Control Operation

Designated Low Fire and High Fire

To go to low fire, double-click ▼. "LO" is displayed.

Note: Flame goes to high fire first before going to low fire.

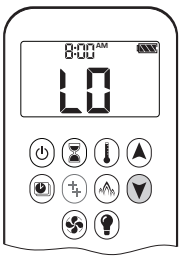

To go to high fire, double-click ▲. "HI" is displayed.

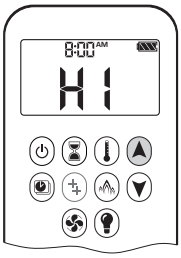

Choosing 1-Button or 2-Button Ignition

On the remote control handset, you can choose a 1-button or 2-button ignition. You can also choose to activate or deactivate some of the functions. By default, the handset is set to a 1-button ignition.

To change from 1-button to 2-button ignition, remove the batteries, wait 10 seconds, reinsert batteries, and immediately when the display flashes, press and hold the ⏻ button for 10 seconds. **ON** is displayed and **1** is flashing. When change is complete, **1** changes to **2**.

To change from 2-button to 1-button ignition, proceed the same as above. **ON** is displayed and **2** is flashing. When change is complete, **2** changes to **1**.

Deactivating or Activating Functions

These functions are active by default, but can be deactivated at any time:

- Child Proof
- Program Mode
- Thermostatic Mode
- Eco Mode
- Circulating Fan Operation
- Countdown Timer

NOTE: The function Auxiliary Feature is not used.

To deactivate functions:

1. Install batteries. All icons are displayed and flashing.
2. While the icons are flashing, press the relevant function button and hold for 10 seconds.
3. The function icon will flash until deactivation is complete. Deactivation is complete when the function icon and two horizontal bars (▬ ▬) are displayed.

Note: If a deactivated button is pressed, there is no function, and the two horizontal bars are displayed.

To activate functions:

1. Install batteries. All icons are displayed and flashing.
2. While the icons are flashing, press the relevant function button and hold for 10 seconds.
3. The function icon will continue to flash until activation is complete, and then turn solid. Activation is complete when the function icon is displayed.

Setting Celsius or Fahrenheit

To change between °C and °F, press and hold ⏻ + ⌛ simultaneously.

Note : °C = 24-hour clock
°F = 12-hour clock

Setting the Time

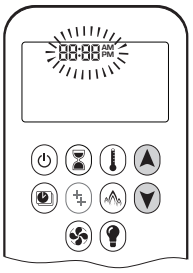

1. Press ▲ + ▼ simultaneously. **Day** flashes.
2. Press ▲ + ▼ to select a number to correspond with the day of the week.
   - 1 = Monday
   - 2 = Tuesday
   - 3 = Wednesday
   - 4 = Thursday
   - 5 = Friday
   - 6 = Saturday
   - 7= Sunday
3. Press ▲ + ▼ simultaneously. **Hour** flashes.
4. To select hour press ▲ or ▼.
5. Press ▲ + ▼ simultaneously. **Minutes** flash.
6. To select minutes press ▲ or ▼.
7. To confirm, press ▲ + ▼ simultaneously or wait.

Appendix B - Remote Control Operation

Child Proof

Your handset can be set to lock out all commands to the fireplace, except OFF.

To turn Child Proof ON:

1. Press and hold ⏻ + ▼ simultaneously.
2. is displayed. Child Proof is now active.

To turn Child Proof OFF:

1. Press and hold ⏻ + ▼ simultaneously.
2. disappears. Child Proof is now inactive, and the handset has full function.

Countdown Timer

You can set your fireplace to automatically turn off at the end of a timer.

To set a Countdown Timer:

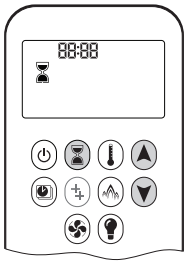

1. Press and hold ⌛ until ⌛ is displayed. **Hour** flashes.
2. Press ▲ or ▼ to select Hour.
3. To confirm, press ⌛. **Minutes** flash.
4. Press ▲ or ▼ to select Minutes.
5. To confirm, press ⌛ or wait.

To turn off a Countdown Timer:

1. Press ⌛, and the ⌛ countdown disappears.

Note: The Countdown Timer only works in Manual, Thermostatic, and Eco modes. Maximum countdown time is 9 hours and 50 minutes.

Light/Dimmer Operation

On:

Press 💡, 💡 is displayed. Light is on at preset level.

Off:

Press 💡, 💡 disappears. Light turns off.

Setting:

1. Press and hold 💡 until 💡 flashes.
2. To adjust light between 20-100% press ▲ or ▼.
3. To confirm setting either press 💡 or wait. 💡 is displayed.

Note: The light works independently of the pilot flame. If you want the light on but no flame, press 💡 button.

Appendix B - Remote Control Operation

Modes of Operation

Thermostatic Mode

The room temperature is measured and compared to the set temperature. The flame height is automatically adjusted to achieve the set temperature.

Program Mode

The temperature is controlled by Programs 1 and 2, each of which can be set to go on and off at specific times, at a set temperature.

Eco Mode

Flame height modulates between high and low. If the room temperature is lower than the set temperature, the flame height stays on high for a longer period of time. If the room temperature is higher than the set temperature, the flame height stays on low for a longer period of time. One cycle lasts approximately 20 minutes.

If any of the above modes (Thermostatic, Program, or Eco) are engaged by the MyFire app over WiFi, the handset will display **APP**.

Manual Mode

The on/off status of the fireplace, as well as flame height, are manually controlled by the user.

Thermostatic Mode

On:

Press . is displayed. Preset temperature displays briefly, followed by the room temperature.

Setting Desired Temperature:

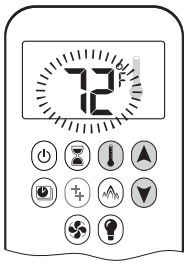

1. Press and hold until is displayed and set temperature flashes.
2. To adjust set temperature, press or .
3. To confirm, press or wait.

Off:

1. Press .
2. Press or to go to Manual Mode.
3. Press to go to Program Mode.
4. Press to go to Eco Mode.

Program Mode

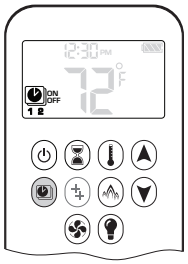

On:

Press .
, **1** or **2**, **ON** or **OFF** are displayed.

Off:

1. Press , , or to go to Manual Mode.
2. Press to go to Thermostatic Mode.
3. Press to go to Eco Mode.

Note: The set temperature for Thermostatic Mode is the temperature for the ON time in Program Mode. Changing the Thermostatic Mode set temperature also changes the ON time temperature in Program Mode.

Default Settings:

- ON TIME (Thermostatic) TEMPERATURE: 70°F / 21°C
- OFF TIME TEMPERATURE: "– –" (pilot flame only)

Appendix B - Remote Control Operation

Temperature Setting:

1. Press and hold until flashes. **ON** and set temperature (set in Thermostatic Mode) is displayed.
2. To continue, press or wait. , **OFF** displayed, temperature flashes.
3. Select off temperature by pressing or .
4. To confirm, press .

Note: The on (Thermostatic) and off set temperatures are the same for each day.

Day Setting:

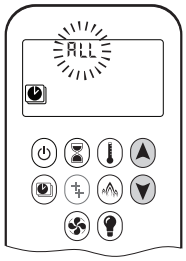

1. **ALL** flashes. Press or to choose between:
   - **ALL** = same settings ON-OFF every day
   - **SA:SU** = same settings ON-OFF Saturday and Sunday
   - **1, 2, 3, 4, 5, 6, 7** = daily timer—unique ON-OFF settings for a single day of the week, for multiple days of the week or for every day of the week.
2. To confirm, press .

ALL Selected (same settings every day)

On Time Setting (PROGRAM 1)

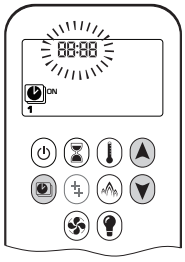

1. , **1, ON** are displayed. **ALL** is displayed briefly. Hour flashes.
2. To select hour, press or .
3. To confirm, press . , **1, ON** are displayed. **ALL** displayed briefly. Minutes flash.
4. To select minutes, press or .
5. To confirm, press .

Off Time Setting (PROGRAM 1)

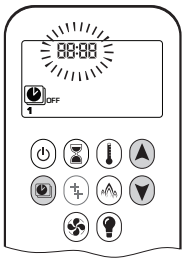

1. , **1, OFF** are displayed. **ALL** is displayed briefly. Hour flashes.
2. To select hour, press or .
3. To confirm, press . , **1, OFF** are displayed. **ALL** displayed briefly. Minutes flash.
4. To select minutes, press or .
5. To confirm, press .

Note: Either continue to PROGRAM 2 and set ON and OFF times or stop programming at this point, and PROGRAM 2 remains deactivated.

Note: PROGRAM 1 and 2 use the same ON (Thermostatic) and OFF temperatures. Once a new ON (Thermostatic) and/or OFF temperature has been set, that temperature becomes the new default setting.
Note: ON and OFF times programmed for PROGRAM 1 and PROGRAM 2 become the new default times.

The batteries must be removed to clear the PROGRAM 1 and PROGRAM 2 ON and OFF times and temperatures.

SA:SU (same settings Saturday and Sunday) or 1, 2, 3, 4, 5, 6, 7 (different settings on different days)

- Set on time and off time using the same procedure as "ALL Selected" above.
- Waiting to finish setting.

Eco Mode

On:

Press button to enter Eco Mode. is displayed.

Flame height modulates between high and low every 20 minutes.

Off:

Press button to exit Eco Mode. disappears.

Appendix B - Remote Control Operation

Low Battery Indication

⚠ **CAUTION:** Do not use a screwdriver or other metallic object to remove the batteries from the battery holder or the handset. This could cause a short circuit.

Handset

The battery icon will show when the battery needs to be replaced. Replace with two 1.5 V AAA alkaline batteries.

Receiver

Frequent beeps for 3 seconds when the motor turns indicate the batteries in the battery holder need to be replaced. Replace with four 1.5 V AA alkaline batteries.

Automatic Shut Off

Countdown Timer

At the end of countdown time period, the fire turns off. The Countdown Timer only works in Manual, Thermostatic, and Eco Modes. Maximum countdown time is 9 hours and 50 minutes.

Low Battery Receiver

With low battery power in the battery holder, the system shuts off the fire completely. (This will not happen if the power is completely interrupted.)

Seven Day Shut Off

The system shuts off the fire completely if there is no change in flame height for 7 days.

Automatic Turn Down

3 Hour No Communication Function

The valve will turn to pilot flame if there is no communication between the handset and receiver for a 3-hour period. The fire will continue to function normally when communication is restored.

Radio Frequency

918.0 MHz for USA and Canada.

This device complies with Part 15 of the FCC Rules and with Industry Canada license-exempt RSS standard(s). Operation is subject to the following two conditions:

(1) this device may not cause harmful interference, and

(2) this device must accept any interference received, including interference that may cause undesired operation.

Appendix B - Remote Control Operation

Error Codes

In the event of an error condition with the handset or fireplace, the handset will display an error code.

Failure Code	Message on Handset	Duration of Display	Symptom	Possible Cause
F04	F04	4 sec	• No pilot flame within 30 sec • **Note:** after 3 failed ignition sequences, F06 shown	• No gas supply • Air in pilot supply line • No spark • Reversed polarity in thermocouple wiring
F06	F06	4 sec	• 3 failed ignition sequences in 5 minutes • Fire is not responding, no pilot flame	• No gas supply • Air in pilot supply line • No spark • Reversed polarity in thermocouple wiring • Incorrect pilot orifice if valve has been converted from LPG to NG or vice versa
F07	Low battery symbol	Permanent	• Battery icon flashes on handset display	• Low battery in handset
F09	F09	4 sec	• Fire is not responding • No electronic control of fire	• Down arrow button ▼ was not pressed during pairing • Receiver and handset are not synced
F46	F46	4 sec	• Fire is not responding • Intermittent response • No electronic control of fire	• No or bad connection between receiver and handset • No power at receiver (batteries low) • Low communication range (mains adapter faulty, handset not communicating with receiver)

Appendix C - Wall Switch Operation

The Wall Switch can be used to control your fireplace. You can turn the pilot on or off and you can increase or decrease the flame height.

Note that the thermostat and programming functions are not available with the wall switch.

Adjusting Flame Height

Press and hold large flame button to gradually increase flame height.

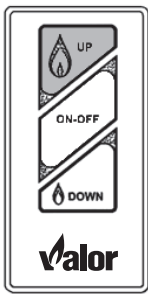

Turning Appliance ON and OFF

Press ON-OFF button once to light pilot. Press again to shut off pilot.

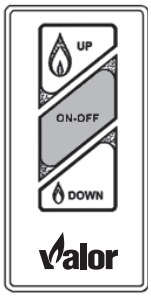

Press and hold small flame button to gradually decrease flame height.

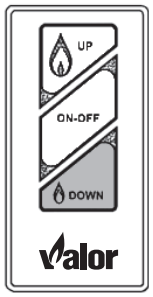

Appendix D - HeatShift System

HeatShift™ System

Planning Installation: LX2 with HeatShift®

Planning for use with the following **Valor Heater Models ONLY: 2200J, 2200K**

Application

The HeatShift® convection duct kit redistributes the warm air flow away from the fireplace opening to a more desirable location using natural convection without use of a fan.

Plenums LKD1, LDK3, LDK4 or LDK9: the warm air flow is relocated to a position higher up the wall, out the sidewalls, or even to an adjacent room.
Termination Plates LDK7: the warm air flow is discharged through a gap (min. 2-1/2") between the wall above the fireplace and the ceiling. **LDK7's discharge opening must be located in the same room as the fireplace.**
The result is much cooler wall temperatures above the fireplace opening for locating televisions, artwork, etc.

Any kit, LDK1, LDK3, LDK4, LDK7 or LDK9 may be used on LX2.

As a further option, the warm airflow may be extracted away from the duct kit plenum **(LDK1 and LDK4 ONLY)** by connecting a 1270RBK HeatSplit Remote Blower Kit to the duct kit plenum.

⚠ WARNING

When placing discharge close to ceilings, staining or streaking may occur on light colored ceilings due to any dust, etc. in air flow; placing plenum(s) lower on the wall will help reduce the possibility of staining or streaking.

⚠ WARNING

DO NOT cover or place objects in front of or on top of air outlet(s). AVOID locating outlet within 7 feet above floor level as discharge temperatures are hot!

Approvals

The LDK1, LDK3, LDK4, LDK7 and LDK9 duct kits are CSA approved for use only with Valor Series fireplaces listed above—DO NOT use with any other models.

5-inch diameter duct used with this kit must be metal and meet requirements of UL-181 Class 1 Air Duct. Flexible aluminum duct is acceptable provided it meets the UL-181 Class 1 requirements.

Note: These instructions are to be used in conjunction with instructions regarding fireplace installation in this manual.

Kits

There are 4 kits to choose from:

- LDK1—48" Plenum
- LDK3—14" Plenums (2), includes grilles
- LDK4—38" Plenum
- LDK7—Duct Termination Plates (2)—for wall valance discharge ONLY
- LDK9—30" Plenum

Optional accessories

- LDK2—48" Finishing Frame, to use with LDK1
- LDK5—38" Finishing Frame, to use with LDK4
- LDK6— 5" dia Aluminum 2-ply Flex Kit—
  2 x 10'–0" lengths, may be cut to required length
- LDK10—30" Finishing Frame, to use with LDK9

NOTE—Sprinklers

Depending on room temperature, HeatShift air discharge temperatures can be in the range of 210 °F (99 °C). Please refer to local building code, choose appropriate sprinkler heads and place them accordingly.
See Framing and Clearances pages.

Appendix D - HeatShift System

Kits Contents

LDK1
48" x 2"

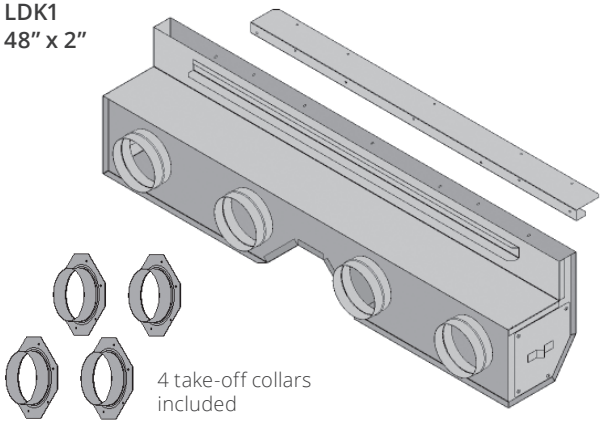

LDK4
38" x 2"

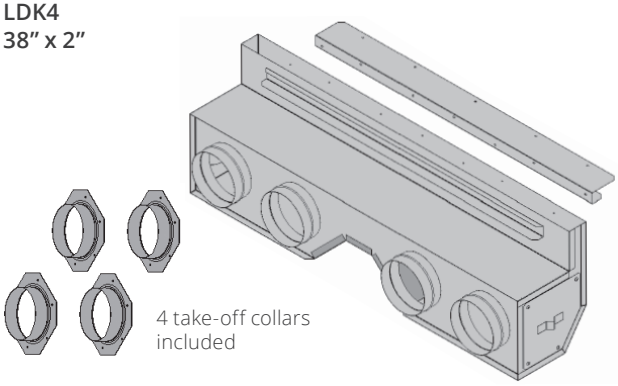

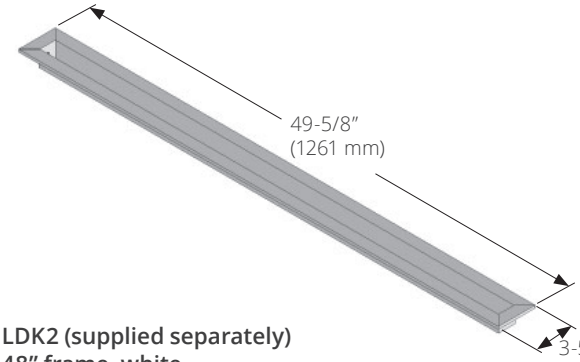

LDK2 (supplied separately)
48" frame, white

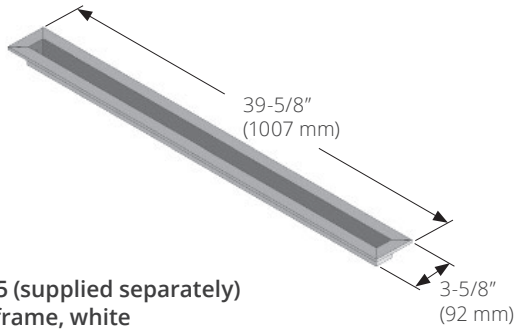

LDK5 (supplied separately)
38" frame, white

LDK3
2 - 14" x 6"

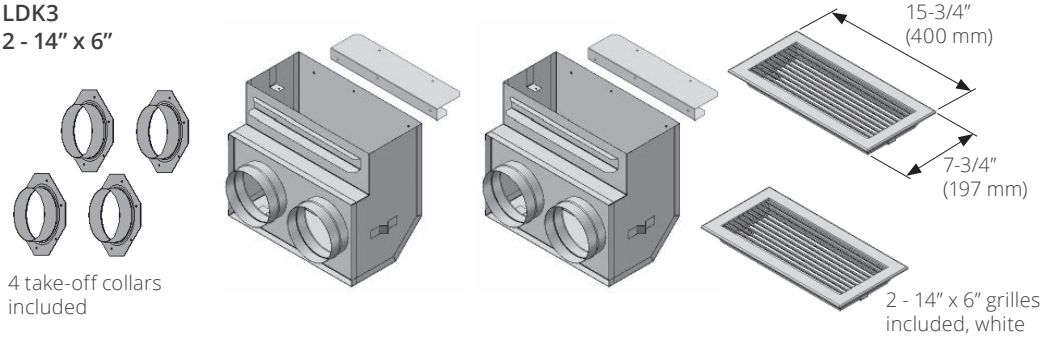

LDK6
2 - 10' x 5" (aluminum flex)

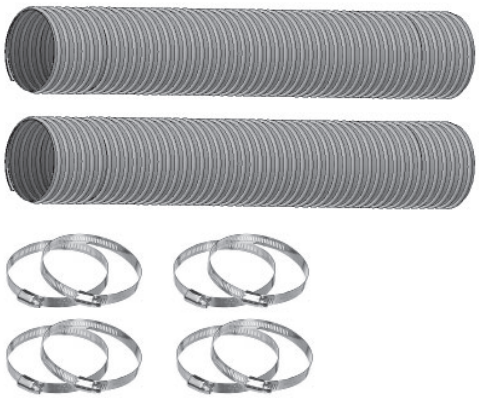

LDK7
2 Duct termination plates

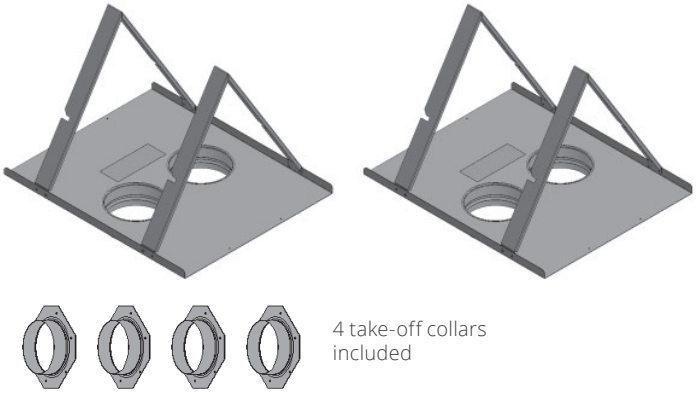

Appendix D - HeatShift System

Kits Contents (cont'd)

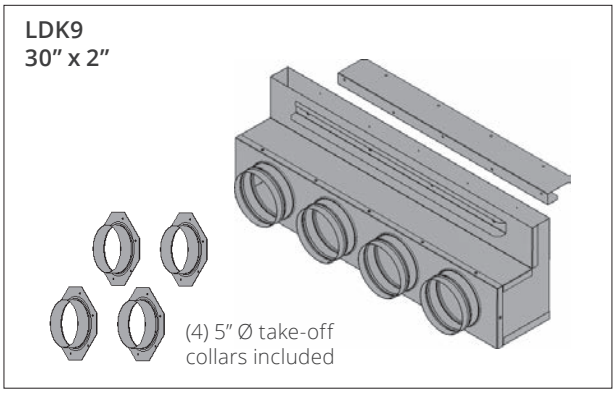

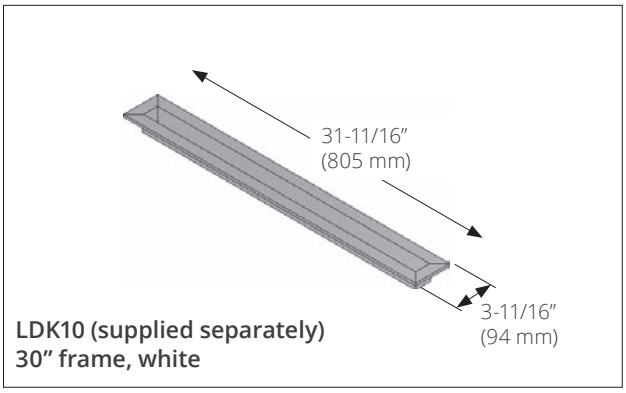

Suggested Configurations

Not to scale

LX2 Series

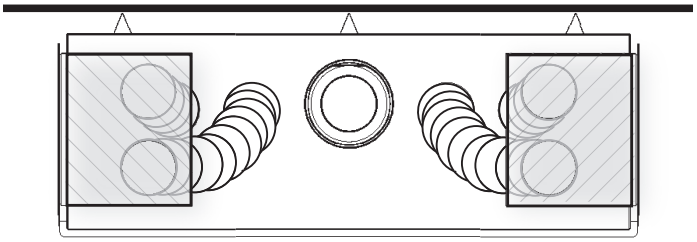

Side wall outlets using LDK3

Note - When using LDK7, the discharge opening must be located in the same room as the fireplace.

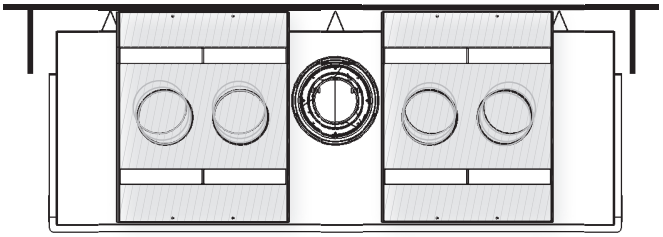

With LDK7

Note - Vertical 6-5/8" venting straight off the 2200 will pass by notched plenum without offsetting the vent. If using 8" vertical venting, a 20" deep cavity may not accomodate the plenum. Adjust cavity depth accordingly.

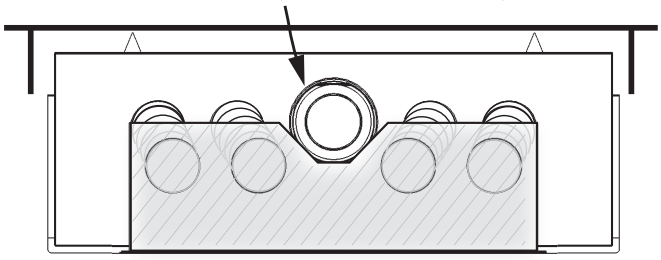

Front wall outlet using LDK1 or LDK4

⚠ WARNING

The plenum duct kits are approved for horizontal discharge ONLY. The termination duct plates are approved for vertical upward discharge ONLY. DO NOT install plenum or termination plates in floor or ceiling. DO NOT COVER OR PLACE objects in front of or on top of air outlet(s). AVOID locating outlet within 7 feet of the floor level as discharge air temperatures are hot!

DO NOT DISCHARGE THROUGH EXTERIOR WALLS!

Appendix D - HeatShift System

Overview (applies to LKD1, LDK3, LDK4 and LDK9 kits)

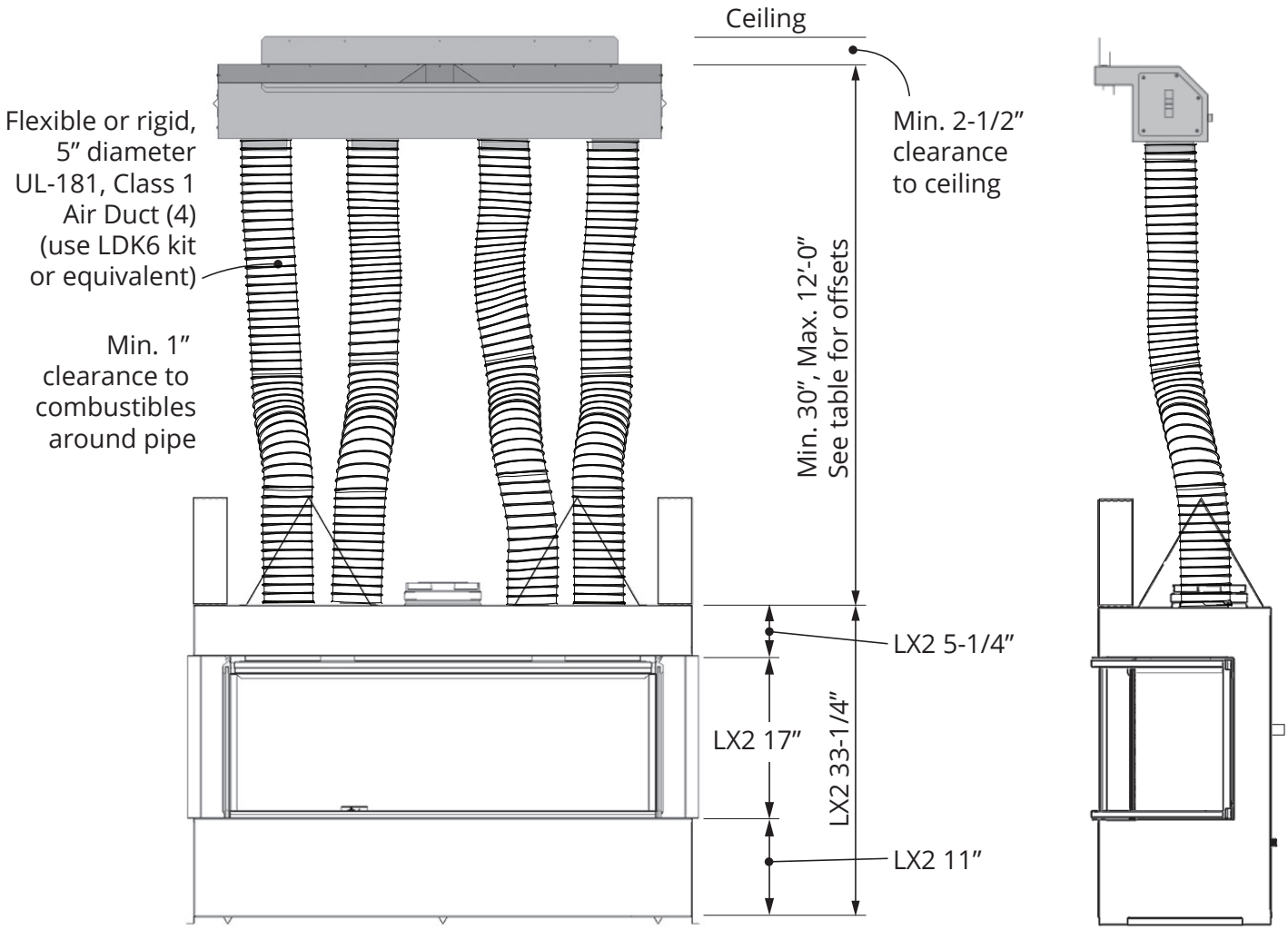

Appendix D - HeatShift System

Overview (applies to LDK7 kit)

Note - Discharge opening must be located in the same room as fireplace when using LDK7.

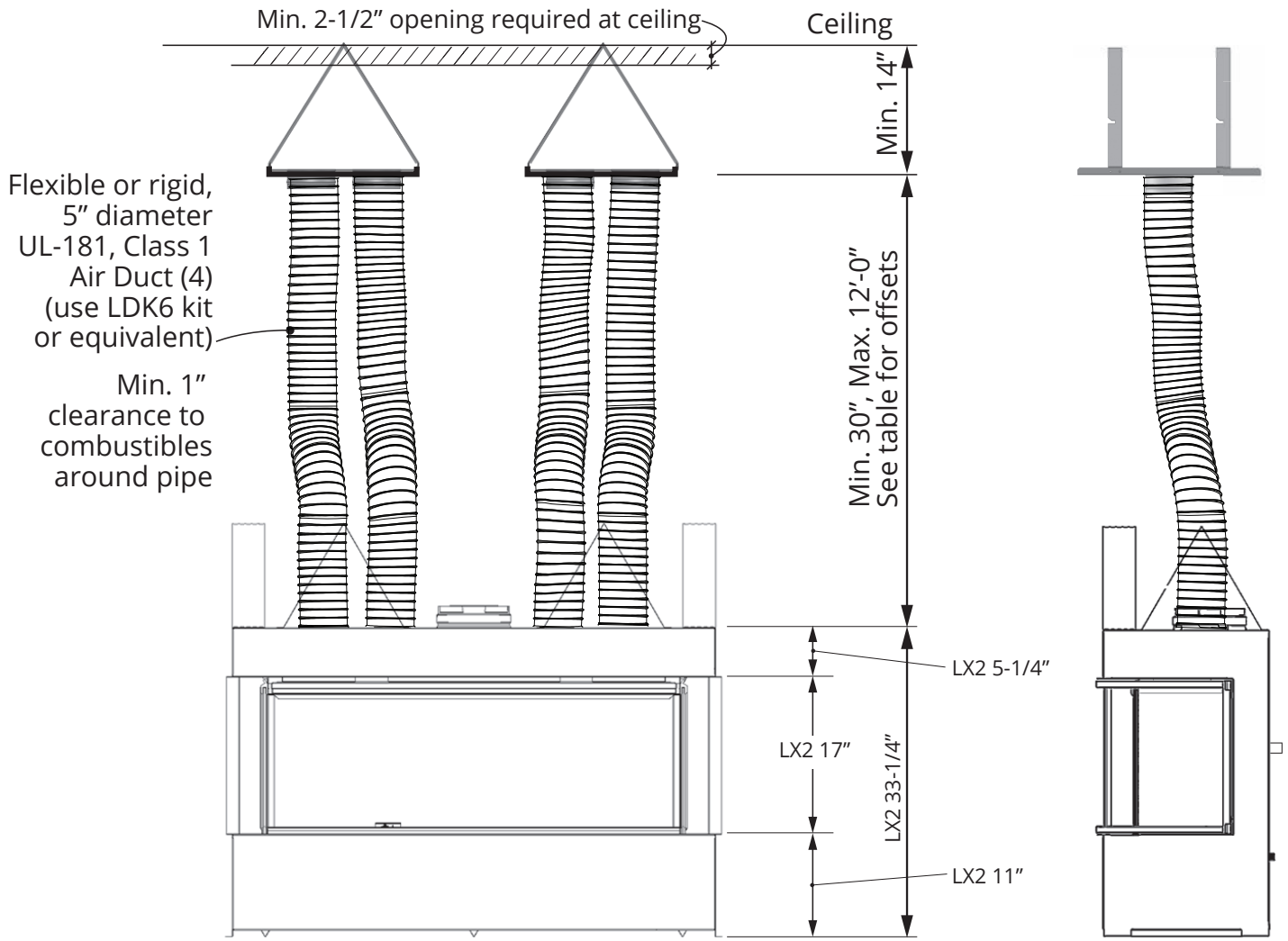

Appendix D - HeatShift System

Y Vertical Rise	X Max. Allowable Horizontal Offset
30″	24″
36″	36″
42″	48″
48″	60″
54″	72″
60″	84″
66″	96″
12′-0″	96″ Max.

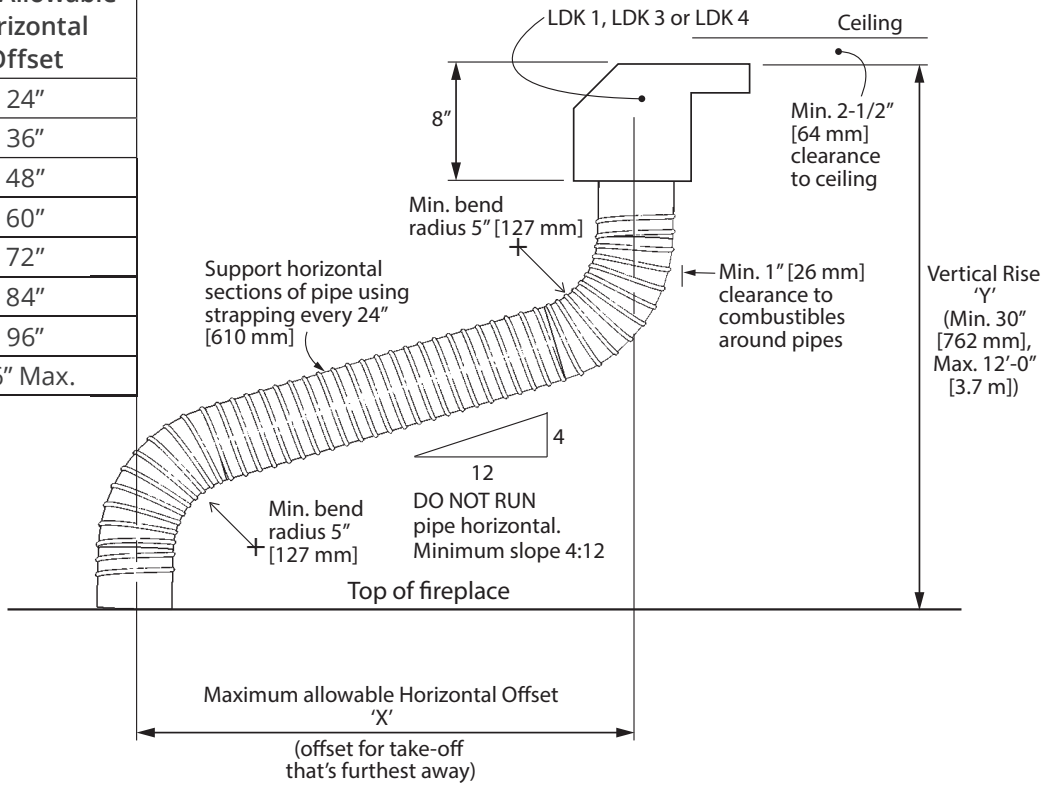

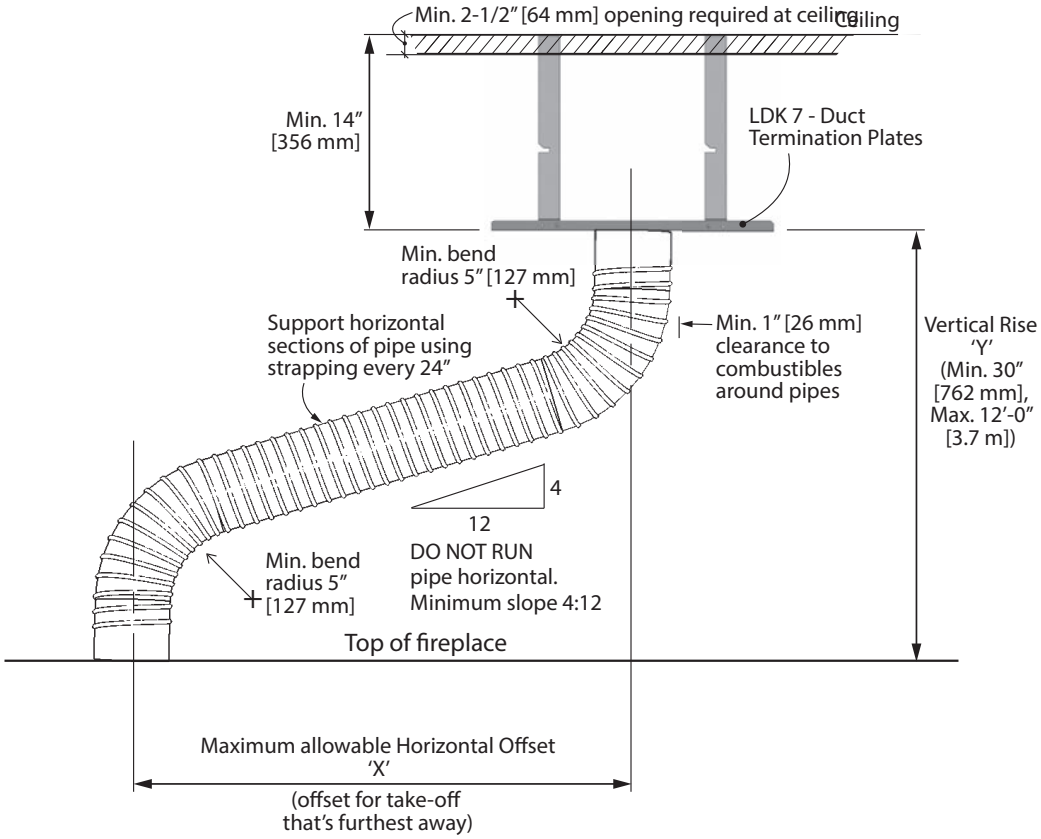

Appendix D - HeatShift System

Plenum Dimensions

LDK 1

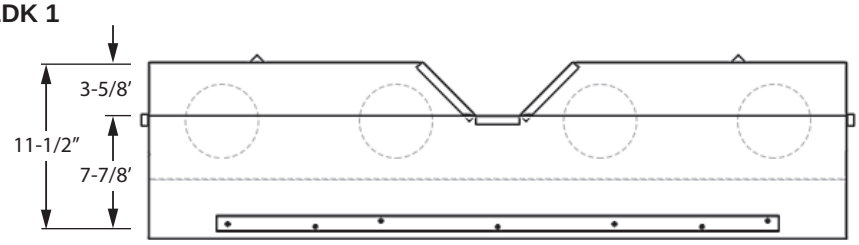

Top View

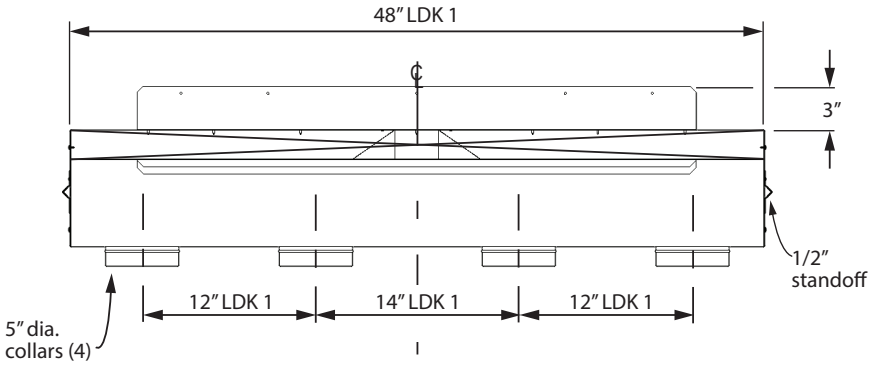

Front View

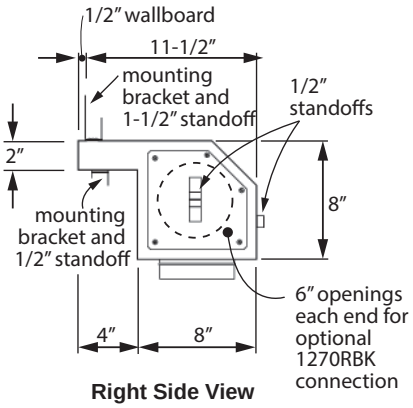

Right Side View

LDK 4

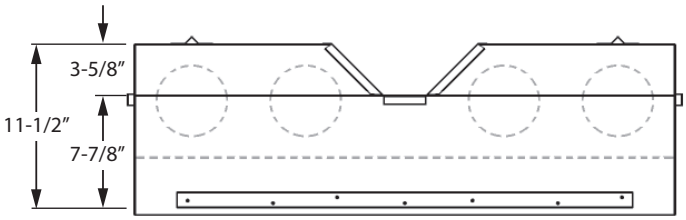

Top View

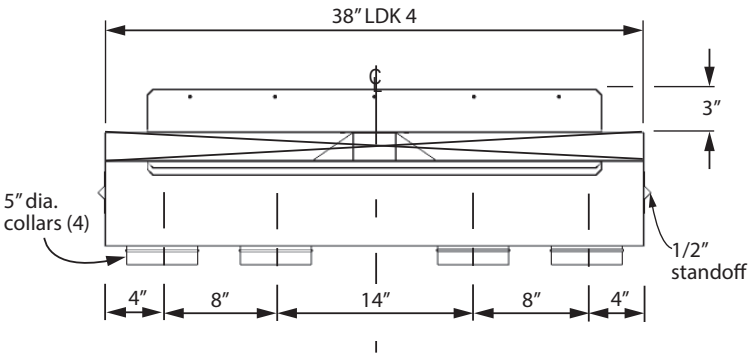

Front View

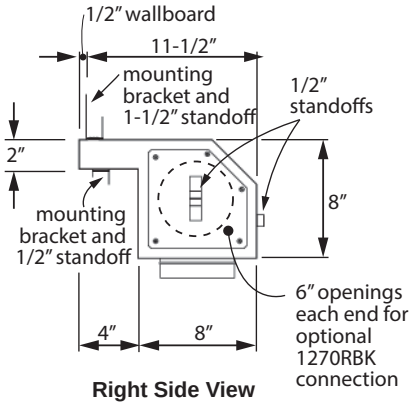

Right Side View

Appendix D - HeatShift System

Plenum Dimensions (cont'd)

LDK 3

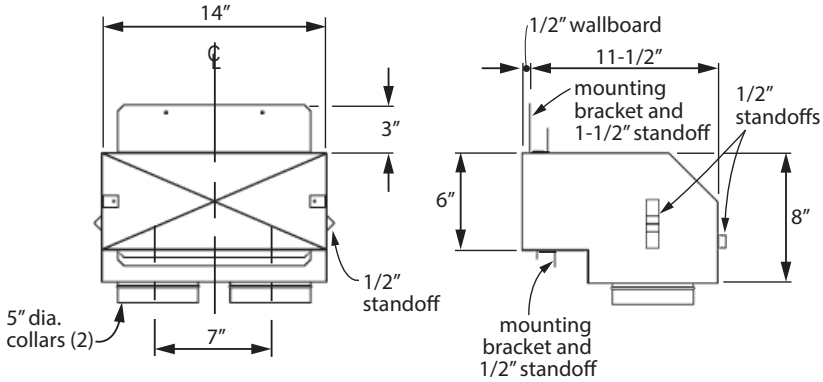

Front View **Right Side View**

LDK 9

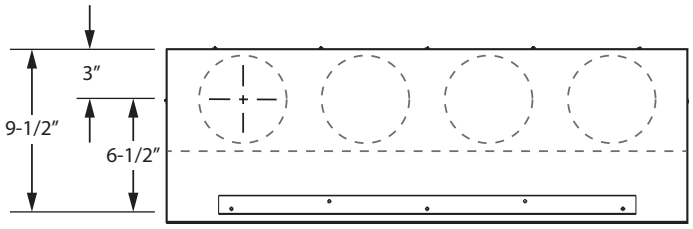

Top View

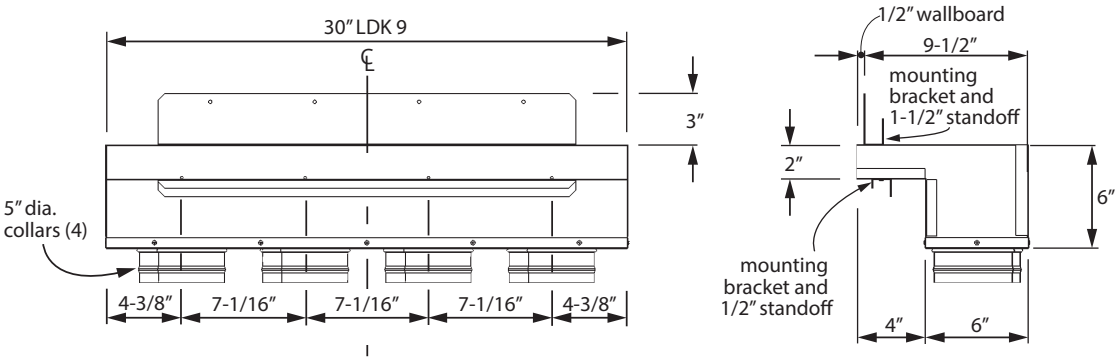

Front View **Right Side View**

Appendix D - HeatShift System

LDK7 Plates Dimensions

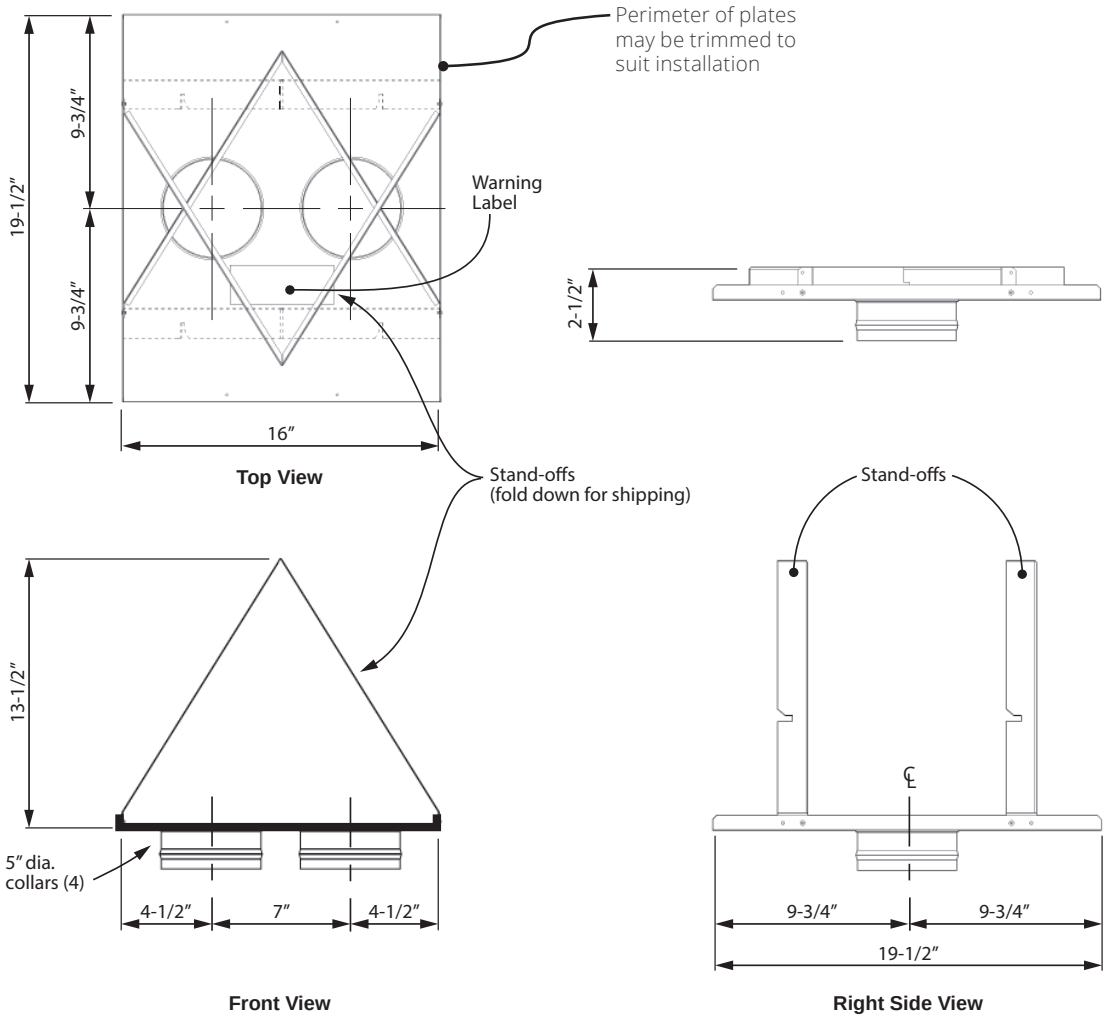

Appendix D - HeatShift System

Rough Frame Openings

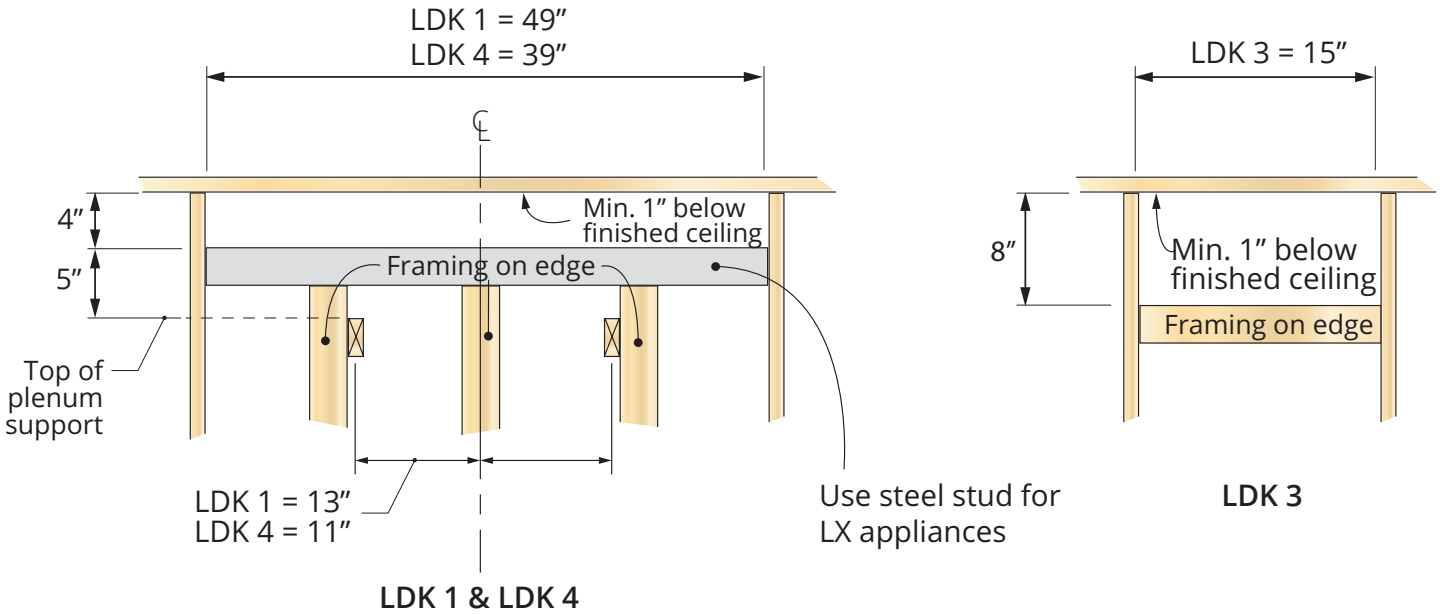

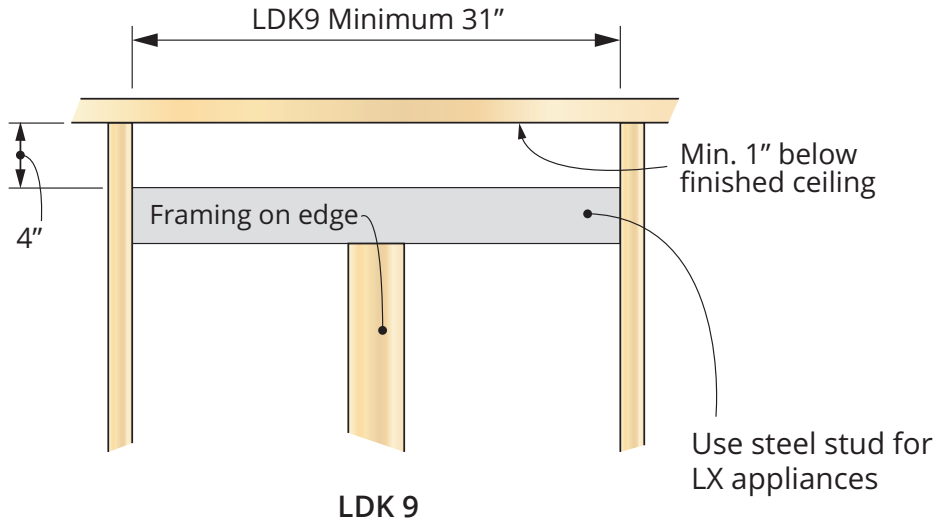

Appendix D - HeatShift System

Framing and Clearances

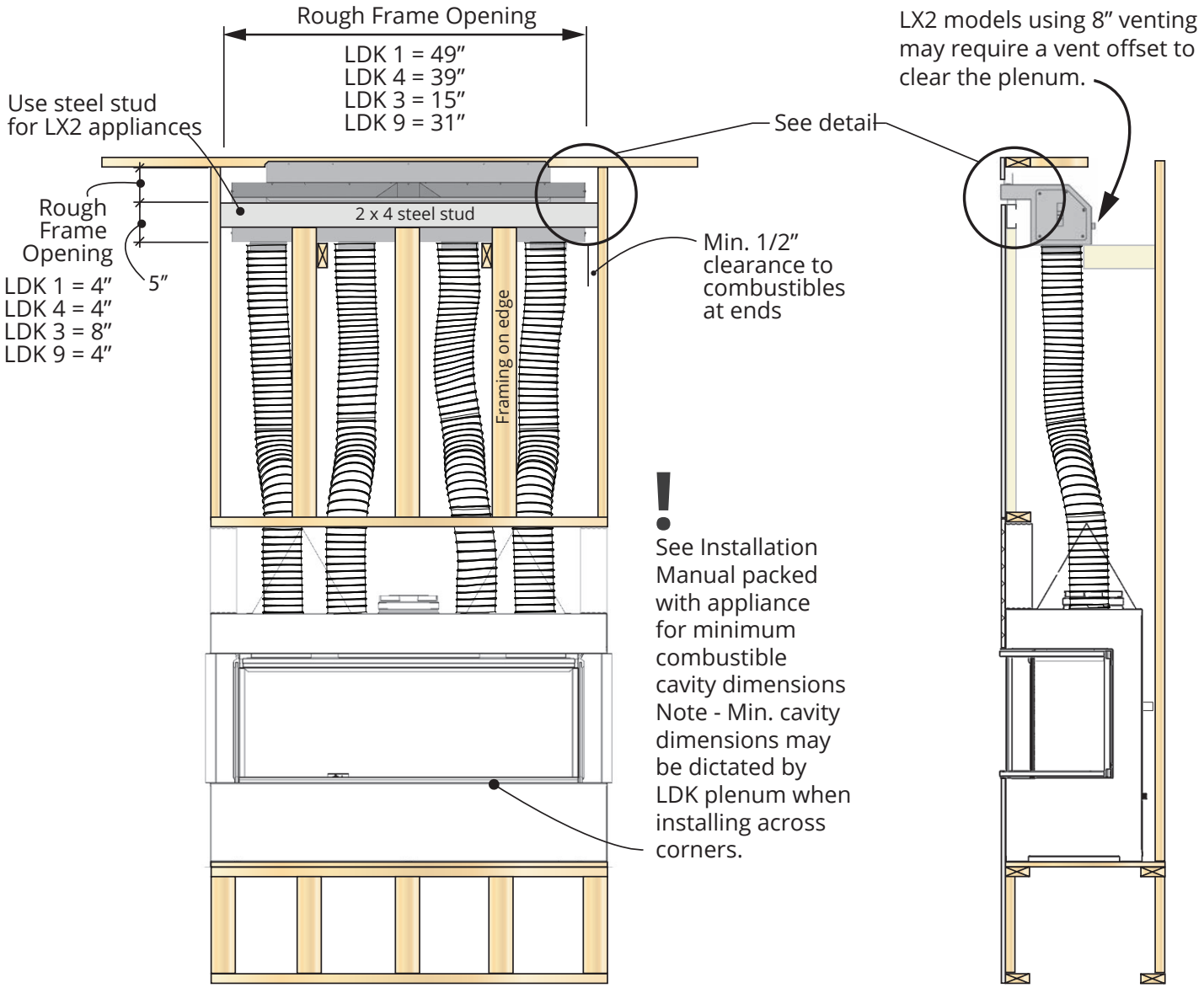

NOTE—Sprinklers

Depending on room temperature, HeatShift air discharge temperatures can be in the range of 210 °F (99 °C). Please refer to local building code, choose appropriate sprinkler heads and place them accordingly.

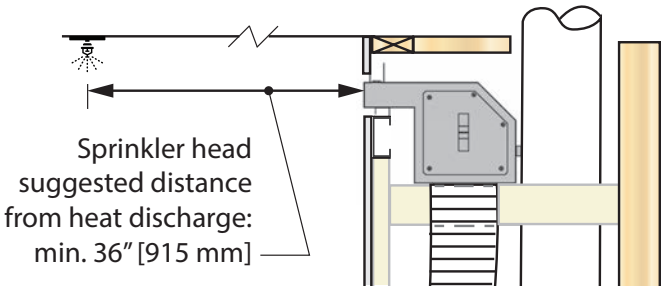

Appendix D - HeatShift System

Framing and Clearances

LDK 1 & 4

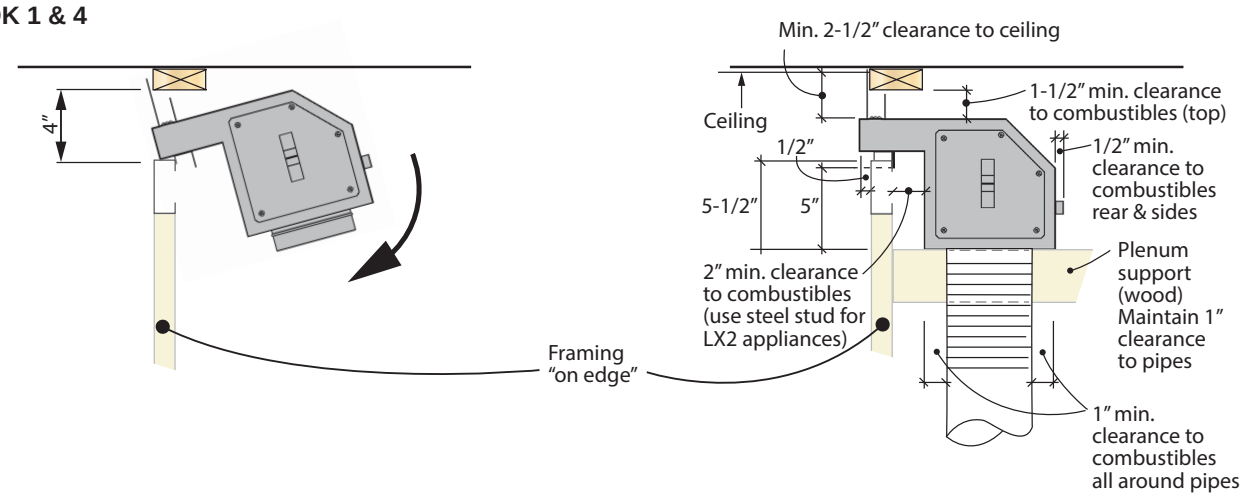

LDK 3

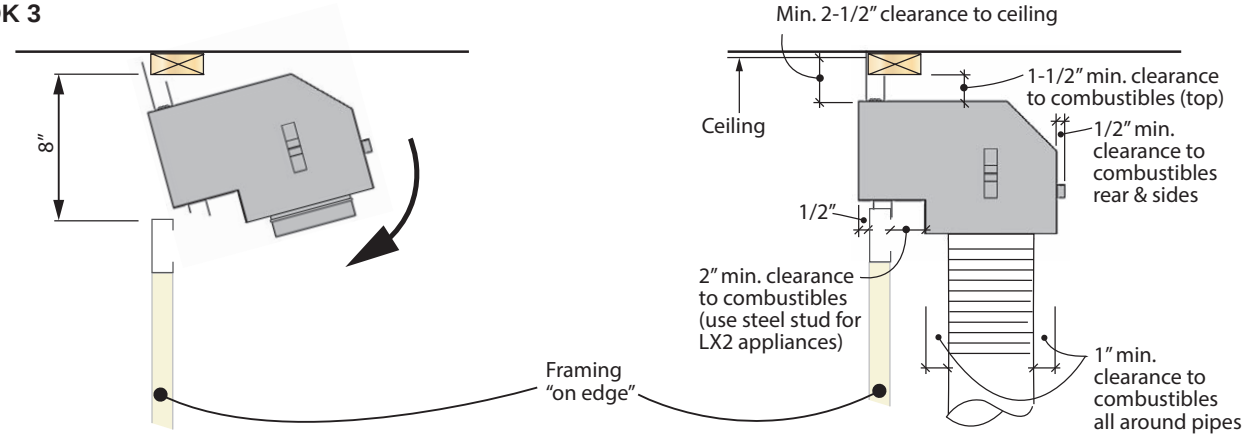

LDK9

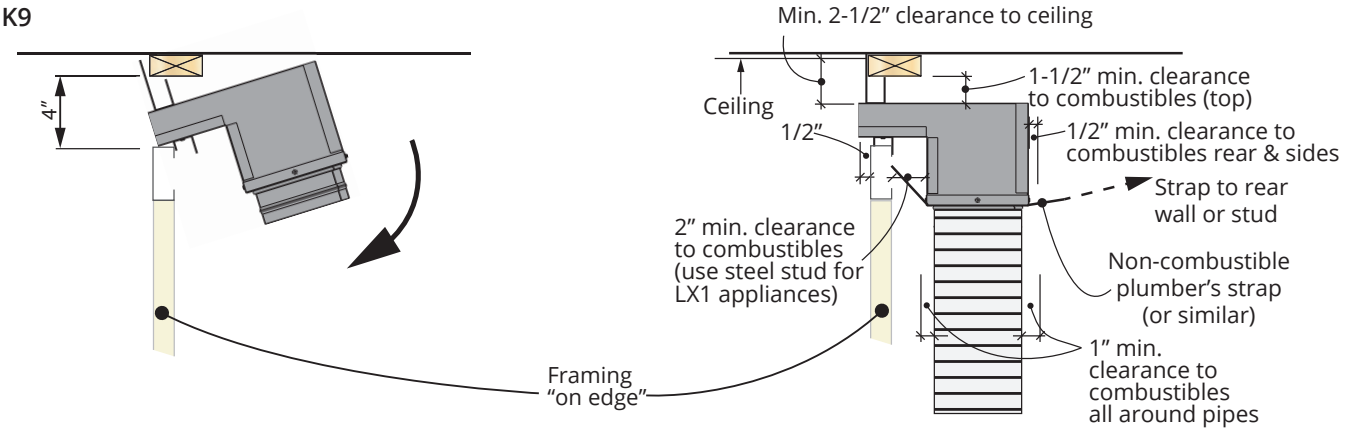

NOTE—Sprinklers

Depending on room temperature, HeatShift air discharge temperatures can be in the range of 210 °F (99 °C). Please refer to local building code, choose appropriate sprinkler heads and place them accordingly.

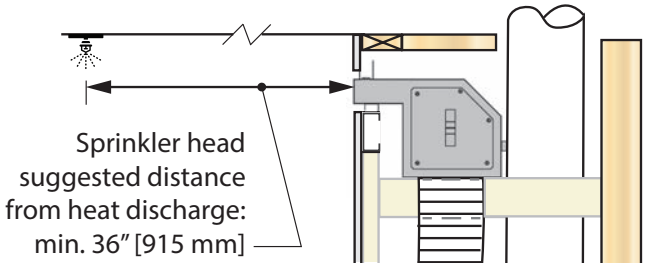

Appendix D - HeatShift System

LDK 1, LDK 4 with optional HeatSplit
(not approved with outdoor installations)

HeatShift™ + HEATSPLIT

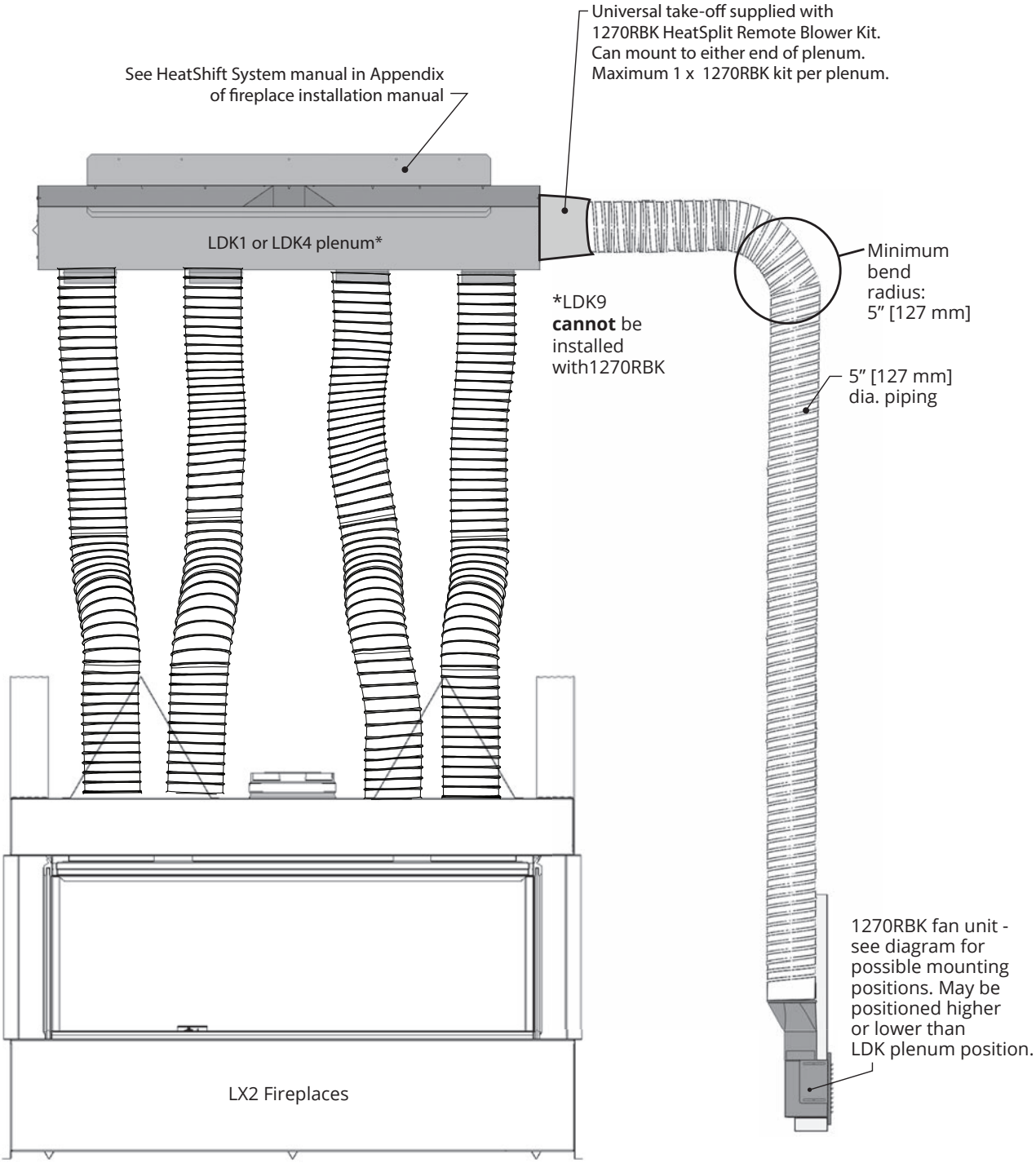

Appendix D - HeatShift System

Wall Valance Discharge Opening using LDK7—Duct Termination Plates

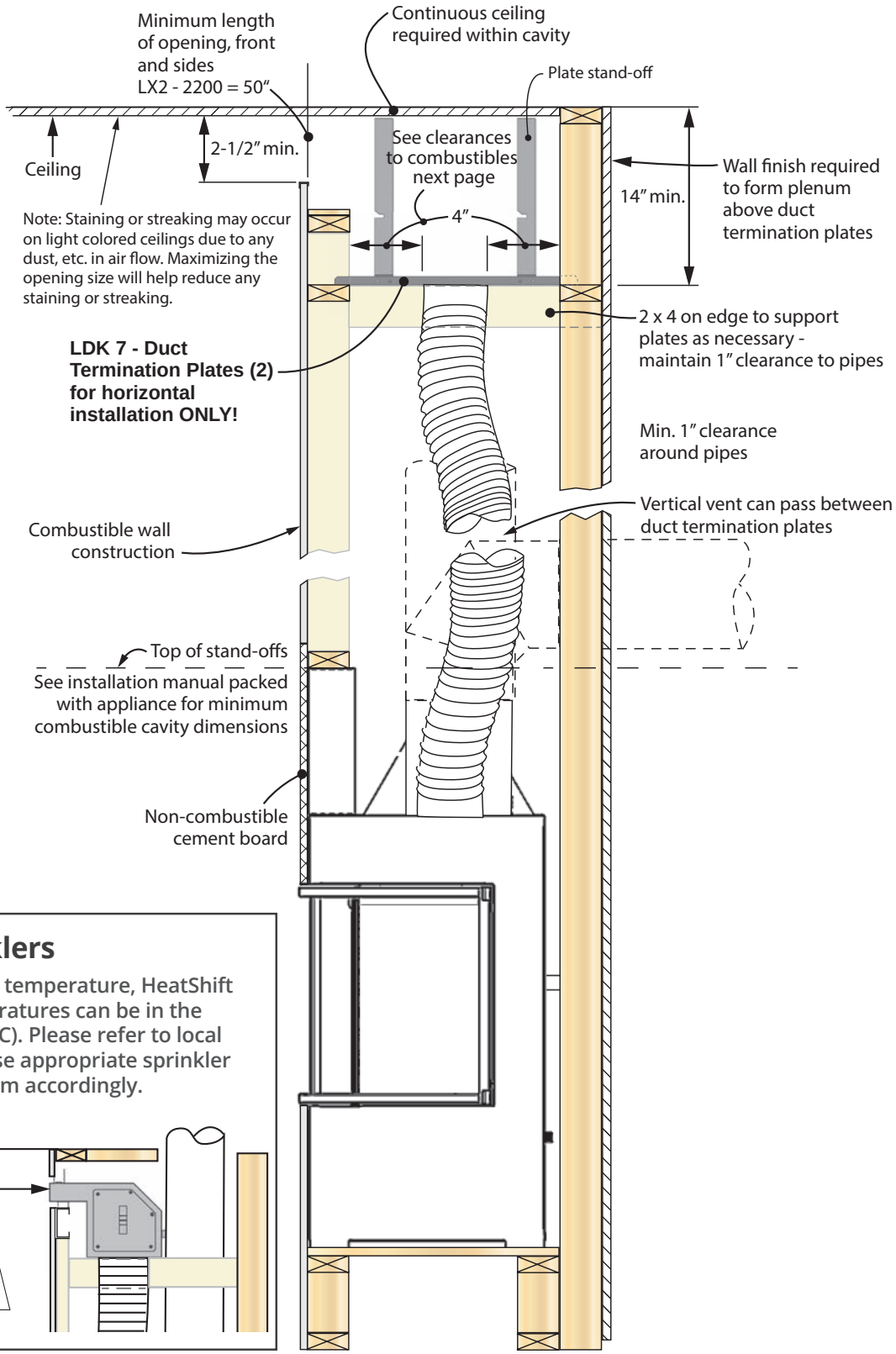

NOTE—Sprinklers

Depending on room temperature, HeatShift air discharge temperatures can be in the range of 210 °F (99 °C). Please refer to local building code, choose appropriate sprinkler heads and place them accordingly.

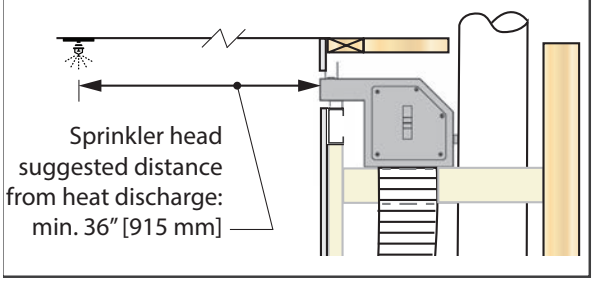

Appendix D - HeatShift System

LDK7 Clearances to Combustibles

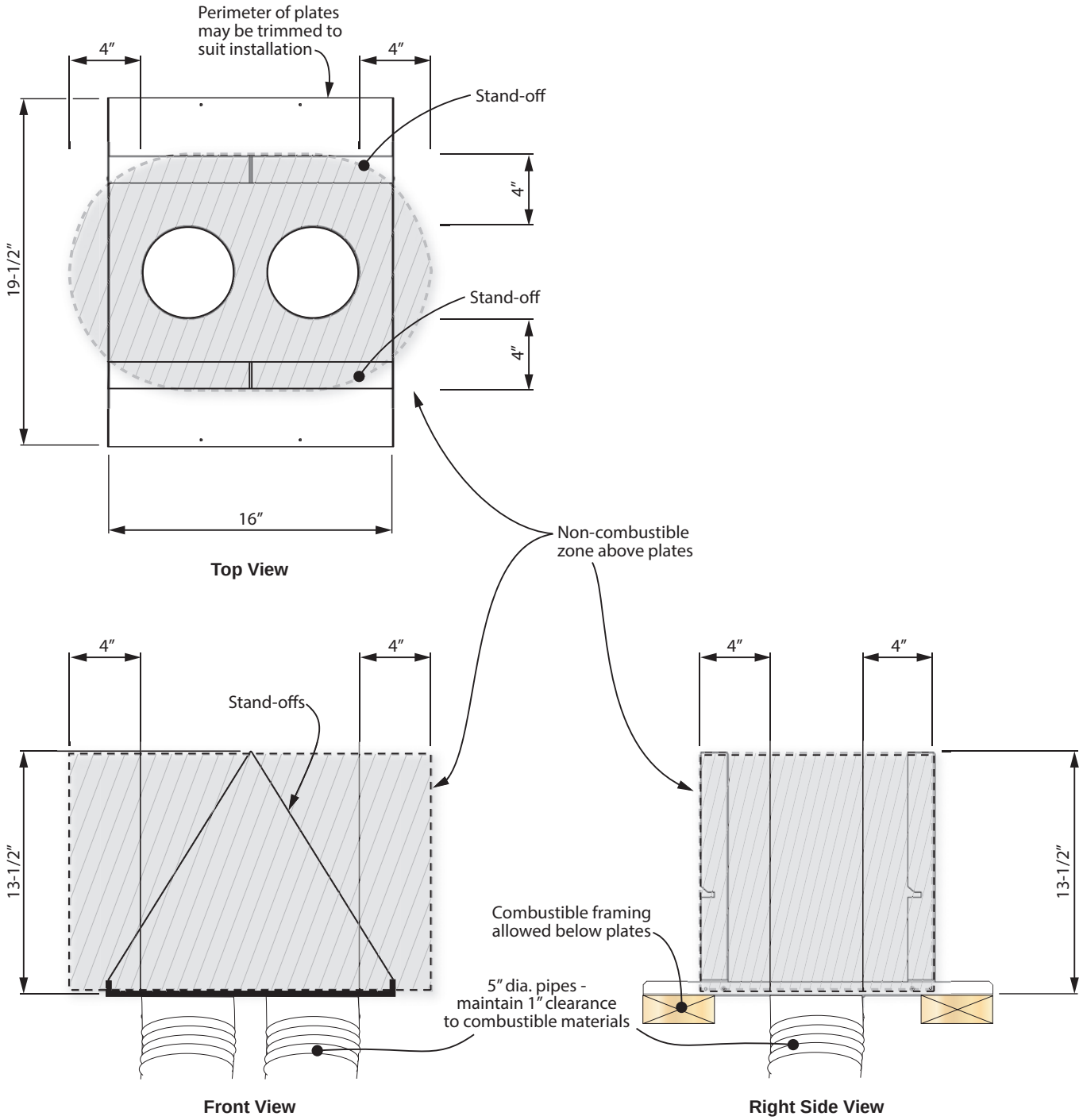

Appendix D - HeatShift System

⚠ WARNING

All FOUR (4) takeoffs MUST BE CONNECTED TO PLENUM(S).

Install Plenum Kits (LDK1, LDK3, LDK4 & LDK9) —see next page for LDK7 Duct Termination Plates

1. Install 4 collars supplied with plenum to appliance.

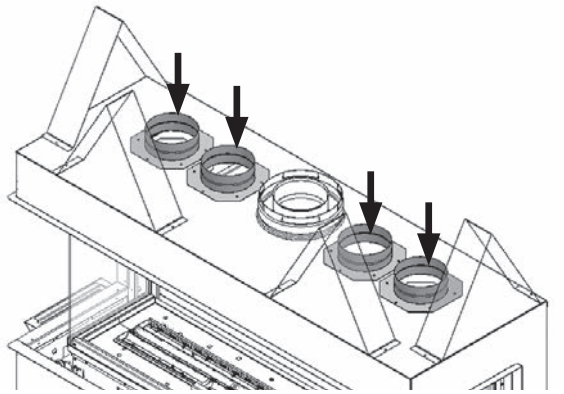

2. Frame a rough opening at the desired location—see earlier sections of this manual for allowable plenum positions and rough frame opening sizes.
3. Install top mounting bracket(s) to the plenum using screws provided (use the short sheet metal screws provided otherwise the screw tails (ends) will interfere with the finishing frame when installed).

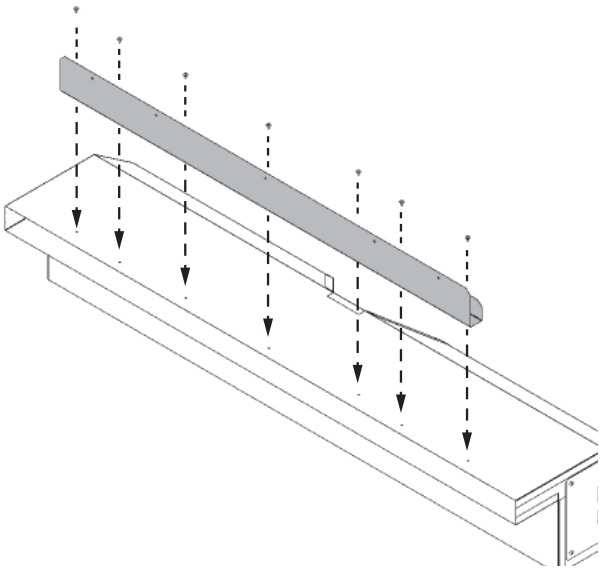

4. Install the plenum(s) into the rough frame opening maintaining minimum clearances to combustibles as listed—see Rough Frame Openings. Fix the plenum to the framing using nails or screws through the top mounting bracket. **Note that the mounting brackets are not intended to carry the weight of the plenum and pipes. Provide support to the underside of the plenum and ensure the plenum is level and its outlet is not distorted (see Framing and Clearances).** Use metal strapping (all-round, not supplied) as required to further secure the plenum to framing.
5. Attach one section of UL-181, Class 1 approved air duct to each of the collars and secure it with gear clamps provided. **DO NOT SPLICE DUCTS!**
6. Attach the top of the pipe sections to the plenum securing them with the gear clamps provided. An upward slope must be maintained in horizontal sections of pipes for proper convection. Use straps as necessary to maintain the pipes positions. Support horizontal sections every 24 inches.
7. Paint the inside surfaces of the plenum using high-temperature flat black spray paint for installations where the inside of the plenums may be visible. **Note:** The flanges of the white finishing frame (when used) will insert approximately 1-1/4" into the plenum covering the shiny sheet metal.
8. Install the finishing frame or louver to the plenum after the wall finish is completed:
   LDK1, LDK4, LDK9: Use the LDK2, LDK5 or LDK10 depending of the length of the plenum.

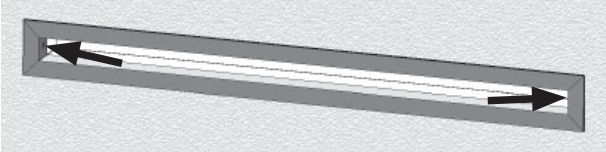

   LDK3: Use the grilles provided with the kit.

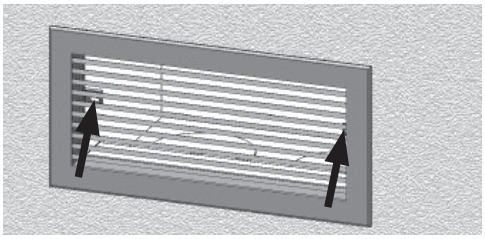

   Note: The frame/louver are finished white but may be painted another color if desired; use high temperature paint (250°F). You may also finish up to the perimeter of the plenum opening with your material of choice and not use the frame or louver. Do not finish over any of the opening in the plenum outlet.
9. Continue with the fireplace installation.

Appendix D - HeatShift System

⚠ WARNING

All FOUR (4) takeoffs MUST BE CONNECTED TO PLENUM(S).

Install Duct Termination Plates (LKD7) —see previous page for LDK1, LDK3, LDK4 & LDK9 Plenum kits

1. Install 4 collars supplied with plaques to appliance.

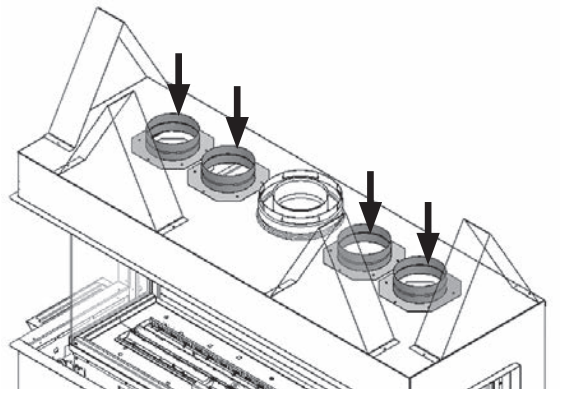

2. Frame a rough opening and platform at the desired location—see earlier sections of this manual for allowable duct termination plates positions and rough frame opening sizes.
3. On each duct termination plate, rotate both standoffs to the vertical position and secure in place using screws provided.

2 stand-offs per plate

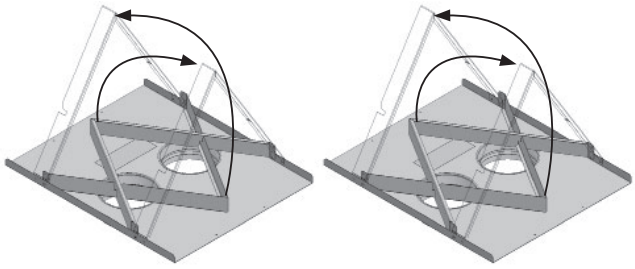

4. Install the termination plates into the framing ensuring collars/pipes on underside of plates maintain 1 inch clearance to combustibles and clearance to combustible above the plates are maintained as listed in preceeding pages.
   The termination plates perimeter may be trimmed as necessary to accommodate framing. Secure the termination plate to framing using screws or nails to avoid movement.
5. Attach one section of UL-181, Class 1 approved air duct to each of the collars and secure it with gear clamps provided. **DO NOT SPLICE DUCTS!**
6. Attach the top of the pipe sections to the duct termination plates securing them with the gear clamps provided. An upward slope must be maintained in horizontal sections of pipes for proper convection. Use straps as necessary to maintain the pipes positions. Support horizontal sections every 24 inches.
7. Continue with the fireplace installation.

Repair Parts List

	Description	Part no.
LDK1	48" Quad Hot Air Plenum Kit	
	48" x 2" quad plenum	4005476
	5" take-off collars (4)	4005478
	Top mounting bracket/standoffs	4007211
	#8 slotted drive screws 1/4" (7)	798601
LDK2	48" Outlet Frame Kit for LDK1	
	Aux Frame-SPL 48" x 2" white	4005612
LDK3	14" Double Hot Air Plenums Kit	
	14" x 6" double plenums (2)	4005464
	5" take-off collars (4)	4005478
	DABL-00-C-SPL 14" x 6" Grilles white (2)	4005614
	Top mounting bracket/standoffs (2)	4005566
	#8 slotted drive screws 1/4" (6)	798601
LDK4	38" Quad Hot Air Plenum Kit	
	38" x 2" quad plenum	4005477
	5" take-off collars (4)	4005478
	Top mounting bracket/standoffs	4007213
	#8 slotted drive screws 1/4" (7)	798601
LDK5	38" Outlet Frame Kit for LDK4	
	Aux Frame-SPL 38" x 2" white	4005613
LDK6	5" Aluminum 2-ply Flex Kit	
	5" dia 10' (uncompressed) aluminum chimney liners (2)	4005635
	4.5" - 6.5" ss gear clamps (8)	4005642
LDK7	Duct Termination Plates	
	Plate and collar assembly (2)	4006747
	5" take-off collars (4)	4005478
	Screws 8 x 3/8 tap PN HD PH (12)	100A757
LDK9	30" Quad Hot Air Plenum Kit	
	30" x 2" quad plenum	4007903
	5" take-off collars (4)	4005478
	Top mounting bracket/standoff	4007601
	#8 slotted drive screws 1/4" (5)	798601
LDK10	30" Outlet Frame Kit for LDK9	
	Aux Frame-SPL 30" x 2" white	4007951

Each LDK kit is sold separately.

Appendix E - Spare Parts

	Description	Part No.
1	Vent reducer - converts to 4 x 6-5/8”	58DVA-X46
2	Window assembly - left - LN/LP	4005724S
	Window assembly - right - RN/RP	4005723S
2a	Hanging linear spring	4011951
3	Side screen assembly	4006888X
4	Exhaust restrictors (2)	4005911
5	Rear panels retaining brackets (3)	4005907
6	End panel retaining bracket	4006740
7	Wire cover	4006270
8	Electrical passage gasket	4006274
9	Burner assembly	4006942AH
10	Media tray - rear	4005939AH
11	Pilot cover	4005940AH
12	Media tray - front	4005938AH
13a	Door gasket - front	4006238A
13b	Door gasket - side	4006238B
14	Window assembly - front	4005722S
14a	Bottom cover (corner right units ONLY)	4006964
14b	Bottom cover (corner left units ONLY)	4006967
15	Silicone window seals (2)	4005846
16	Door handle	4006269
17	Door retainer assembly (2)	4005913
18	Hot Glass warning plate	4003093
19	Light assembly - upper	4005725
20	Bi-pin halogen bulb GY6.35 20 W (3)	4005700
20a	Light assembly overlay	4007370AH
21	Front screen assembly	4006797X
22	Burner module assy - natural gas	4006685KS
	Burner module assy - propane gas	4006154KS
23	Pilot assembly (natural gas)	4006738S
	Pilot assembly (propane gas)	4006739S
24	Plug pilot	4000726
25	Pilot injector #51 (natural gas)	4000735
	Pilot injector #30 (propane gas)	4000736
27	Thermocouple	4000061
28	Pilot tube	4000732
29	Pilot hood 2-flame	4000730
30	Extended nut	4001855
31	Electrode	4001856
32	Gas orifice DMS #32 (natural gas)	4007000-32
	Gas orifice DMS #49 (propane gas)	4007000-49
33	Pilot gaskets (2)	4000715
34	Pilot stand extrusion	4006649
35	Air shutter	4006594
36	Air shutter arm	4006582

	Description	Part No.
37	Pivot bracket	4006583
38	Module tray gasket - long (2)	4006256
39	Module tray gasket - short (2)	4006257
40	Block/pipe connector	4006689
41	Gas supply line	4006688
42	Flex line c/w flare to flare fittings	4000345
43	GV60 valve, no connector	4000873
43a	By-pass screw #220 (natural gas)	4002572
	By-pass screw #160 (propane gas)	4000810
43b	Straight connector	220K891
43c	Inlet elbow 1/2” tube x 3/8”	4002909
44	Thermocurrent interruptor	4001037
45	Nut olive - pilot fitting	220K913
46	V-Module	4002530
47	Receiver ‘CC’ 2-way	4005597
48	Wire harness GV60	4001187
49	Yellow cable to interrupter	4002096
50	Red cable to interrupter	4001035
51	Ignition cable sleeve	4002244
52	Ignition cable 500 mm	4001039
53	Comfort Control wall holder	4004459
54	10-button SYMAX handset black	4007548
55	Remote Battery & Wall Switch Kit	RBWSKX
55a	Junction box	4005527
55b	Cover plate & 4 screws	4005526
55c	Battery holder	4006553
55d	Cable tie	4005524
55e	Harness assembly	4005523
55f	Plate with magnets	4005391
55g	Long screws (4)	4001444
55h	Wall switch with 2 screws	4005522
55i	Battery cover assembly	4005390
56	Ceramic Fluted Black Liners - complete set	2200FBL
57	Rear panel—center	4005943
58	Rear panels—sides (2)	4005941
59	Ceramic panel retainers (2)	4006499BY
60	Reflective Glass Liners	2200RGL
61	Panel retainers (3)	4006500BY
62	Glass panels (3)	4005845
	End panel (L and R appliances)	
63	Fluted black end panel	2200FBP
64	Reflective glass end panel	2200RGP

Appendix E - Spare Parts

	Description	Part No.
65	Murano Glass Set	2200DGM
66	1/2" clear fireglass	4004521
67	1/4" ceramic pads (8)	4006367
68	Murano glass platform - front	4005729
69	Murano glass platform - rear	4005738
70	Driftwook Kit	1705DWKV2
	Log L17	4007987
	Log L21	4007991
	Log L22	4007992
	Log L35	4008739
	Log L40	4002965
	Log L41	4009391
	Log L42	4009392
71	Brown beach pebble	4003082
72	Grey beach pebble	4003083
73	Small grey beach pebble	4003086
74	White beach pebble	4003084
75	Black beach pebble	4003085
76	Small beige beach pebble	4003087
77	Grade 1A vermiculite, bagged	4002940
78	Rocks & Shale Set	1714RSS
79	LH twig	4001827
80	LH twig - short (2)	4001827S
81	RH twig (2)	4001828
82	Grey Rock S4-A (7)	4002338
83	Dark Grey Rock S4-A (5)	4002339
84	Grey Rock S4-B (5)	4002340
85	Dark Grey Rock S4-B (8)	4002341
86	No 7 Grey 5 Matte pitted rock	4002650
87	No 9 Grey 5 Matte rock (2)	4002652
88	No 11 Grey 3 Matte rock (2)	4002654
89	No 14 Grey 9 Gloss rock	4002657
90	No 16 Warm Grey 3 Gloss pitted rock (2)	4002659
91	No 17 Grey 5 Gloss pitted rock	4002660
92	Shale 3/4" - grey, black 0.5lb ea	4004792
93	Splitwood Kit	1705SWKV2
94	Splitwood Logs only	4009519
	Splitwood log #20	4008743
	Splitwood log #21	4008744
	Splitwood log #28	4008751
	Splitwood log #31	4009393
	Splitwood log #32	4009394

	Description	Part No.
	Splitwood log #33	4009395
	Splitwood log #36	4009444
	Splitwood log #37	4009445
	Splitwood log #38	4009446
95	Mixed grey embers, 8-cup bag	4008046
96	Birch Logs Kit	1705BLKV2
	Birch log #L2	4007372
	Birch Log #L4	4007374
	Birch Log #L6	4007376
	Birch Log #L10	4007380
	Birch Log #L12	4007382
	Birch Log #L30	4008758
	Birch Log #L31	4008759
	Birch Log #L32	4008760
	Birch Log #L13	4009422
97	Ceramic log supports (2)	4007649
98	Mixed grey embers, 8-cup bag	4008046
99	GV60 Valve Repair Kit	4004544

Appendix E - Spare Parts

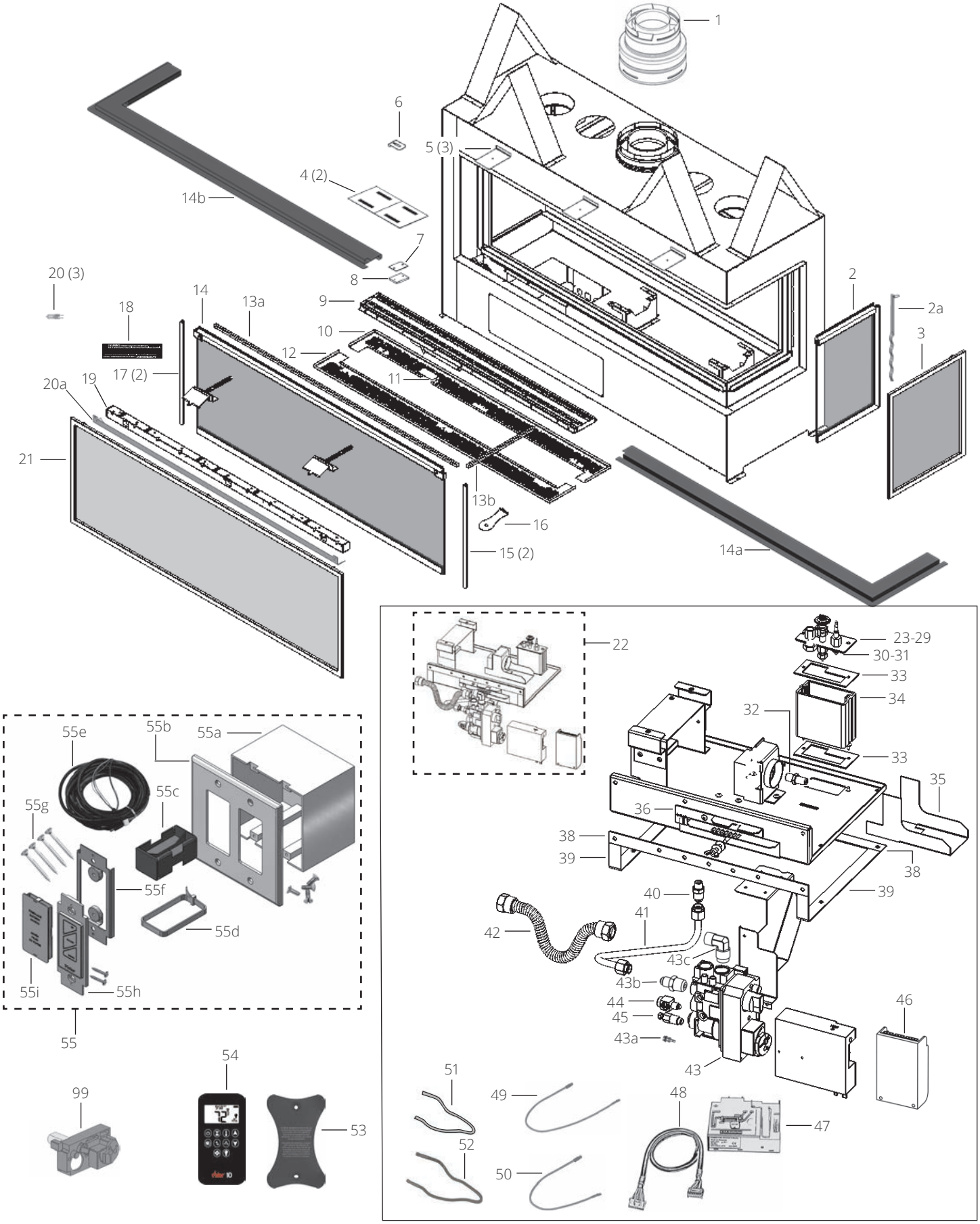
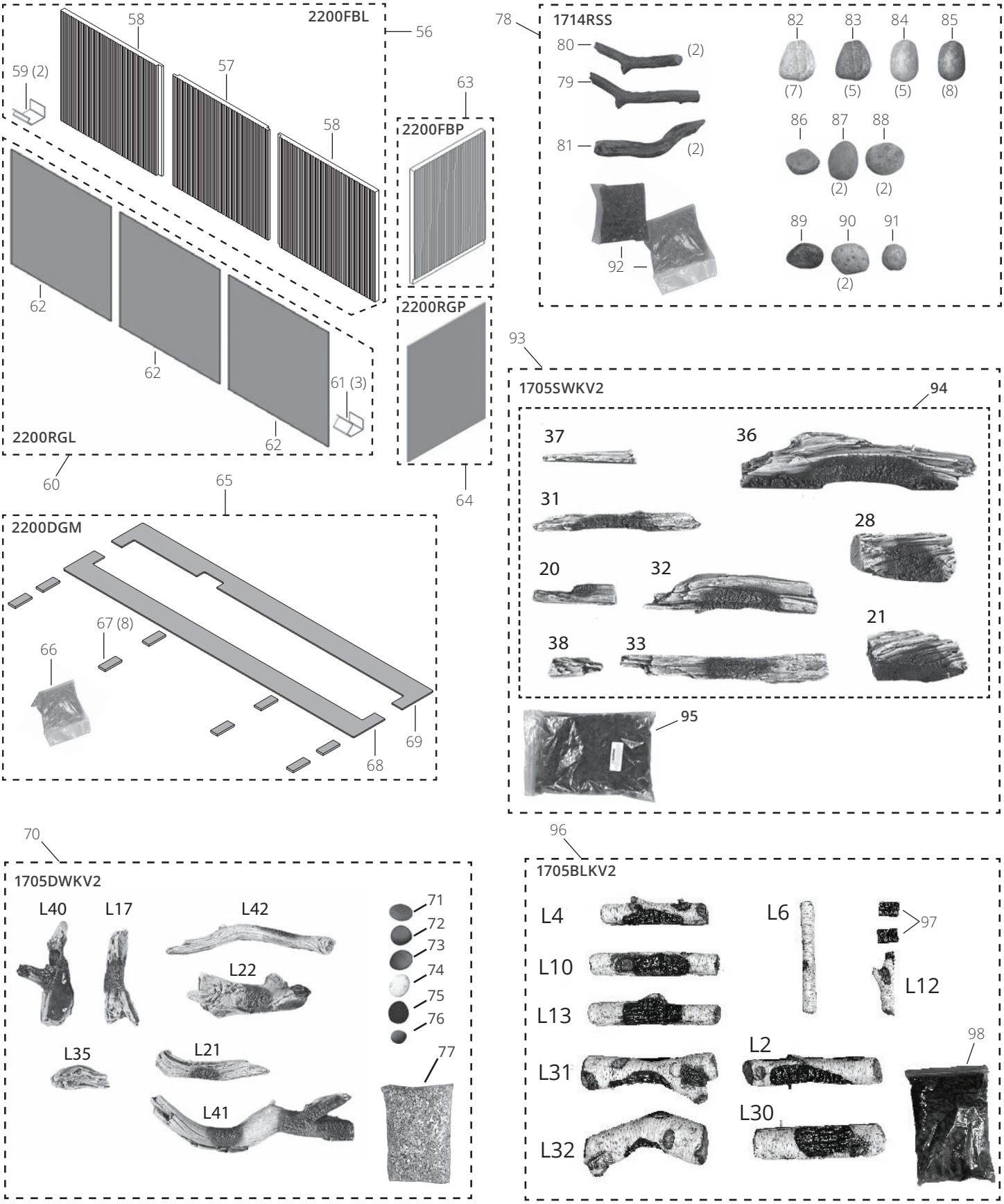
Appendix E - Spare Parts