Installation Manual

P2

Direct Vent Zero Clearance
Gas Fireplace
natural gas 200AN
propane gas 200AP

Installer: Place model/serial number here.

Installer: Leave this manual with the appliance.
Consumer: Retain this manual for future reference.

⚠ WARNING:
FIRE OR EXPLOSION HAZARD
Failure to follow safety warnings exactly could result in serious injury, death, or property damage.

Do not store or use gasoline or other flammable vapors and liquids in the vicinity of this or any other appliance.

WHAT TO DO IF YOU SMELL GAS

- **Do not try to light any appliance.**
- **Do not touch any electrical switch; do not use any phone in your building.**
- **Leave the building immediately.**
- **Immediately call your gas supplier from a neighbor's phone. Follow the gas supplier's instructions.**
- **If you cannot reach your gas supplier, call the fire department.**

Installation and service must be performed by a qualified installer, service agency or the gas supplier.

⚠ DANGER

Hot glass will cause burns.

Do not touch glass until cooled.

Never allow children to touch glass.

A barrier designed to reduce the risk of burns from the hot viewing glass is provided with this appliance and must be installed for the protection of children and other at-risk individuals.

4009484-13

This appliance may be installed in an after-market permanently located, manufactured (mobile) home where not prohibited by local codes. This appliance is only for use with the type of gas indicated on the rating plate. This appliance is not convertible for use with other gases, unless a certified kit is used.

INSTALLER: Leave this manual with the appliance.

CONSUMER: Retain this manual for future reference.

Massachusetts:

The piping and final gas connection must be performed by a licensed plumber or gas fitter in the State of Massachusetts. Also, see Carbon Monoxide Detector requirements on page 63 in this manual.

⚠ WARNING

This product can expose you to chemicals including Benzene, which is known to the State of California to cause cancer and birth defects or other reproductive harm. For more information go to www.P65Warnings.ca.gov.

Note: Natural gas, in its original state, contains Benzene.

This manual contains instructions to install the **ENGINE ONLY.** A trim kit is **REQUIRED** to complete the installation. A barrier screen is provided with the trim kit. **Refer to the manual supplied with the trim for installation.**

This appliance is a domestic room-heating appliance. It must not be used for any other purposes such as drying clothes, etc.

This appliance is suitable for installation in a bedroom or bed sitting room.

Ce guide est disponible en français sur demande.

NATIONAL FIREPLACE INSTITUTE NFI ADVOCATE

We recommend a US Certified National Fireplace Institute (NFI) specialist install our gas hearth products.

DESIGN CERTIFIED

CERTIFIED

The information contained in this manual is believed to be correct at the time of printing. Miles Industries Ltd. reserves the right to change or modify any information or specifications without notice. Miles Industries Ltd. grants no warranty, implied or stated, for the installation or maintenance of your heater, and assumes no responsibility for any consequential damage(s).

© Copyright Miles Industries Ltd., 2026. All rights reserved.
Designed and manufactured for Miles Industries Ltd.

Valor Fireplaces
190–2255 Dollarton Highway
North Vancouver, BC, Canada V7H 3B1
T 604.984.3496 F 604.984.0246
valorfireplaces.com

Welcome to Valor®

This appliance has been professionally installed by:
Dealer Name: _____
Phone:_____

Please read this manual BEFORE installing and operating this appliance.

Fireplace Safety 4
Specifications 6
Kits & Accessories 7
Approved Venting Components 8
Dimensions & Location 10
Preparation 11
- Before Installing 11
- Overview 12
- Clearances to Combustibles 13
- Framing 15
- Wall Finish 17
  - Avoiding Cracking Wall Finishes 18

Venting 19
- Overview 19
- Co-Axial 20
  - Typical Co-Axial Venting Components 20
  - Venting Configurations—With Vertical Rise 22
  - Restrictor 23
  - Horizontal Vent Termination Location 24
  - Co-Axial Vertical Installations 25
- Vent Conversion 26
  - Applications 26
  - Existing Fireplace Preparation 26
- Co-Linear 27
  - Complete Installation Into an Existing Fireplace 27
  - Partial Installation Into an Existing Fireplace 29
  - Installation Into an Adjacent Chimney 30
  - Typical Co-linear Venting Components 31
- Co-Axial Flex with 200CFA 32
- Co-Axial Flex with 590CFA 33

Preparation 34
- Stand-offs 34
- Vent Take-Off 35
- Window Removal & Reinstallation 36
- Optional HeatShift 39

Installation 40
- Electrical Wiring 40
- With 230CIK—Clean Installation Kit 41
- With 3 or 4-Sided Fronts—ZC 45
- Gas Supply 47
- Liner Panels 48
- Fuel Beds 50
  - Traditional Logs 205LSK 50
  - Birch Logs 205BLK 52
  - Driftwood Logs 205DWK 54
  - Coal Set 205CSK 56
- Battery Holder 58
- Remote Control Pairing 59
- Check Operation & Burner aeration 60
- Accessories 61
  - Front and Barrier Screen 61

Wiring Diagram 62
Commonwealth of Massachusetts 63
Appendix A – Lighting Instructions Plate 65
Appendix B – Remote Control Operation 66
Appendix C – HeatShift System® 73
Appendix D – Spare Parts 81

Fireplace Safety

This manual contains very important information about the safe installation and operation of the fireplace. Read and understand all instructions carefully before installing and operating the fireplace. Failure to follow these instructions may result in possible fire hazard and will void the warranty.

Replacement manuals are available by contacting the Valor Customer Service at 1-800-468-2567, or by visiting valorfireplaces.com.

⚠ WARNING: Extremely Hot!

Heat and flammability

- Some parts of the fireplace are extremely hot, particularly the glass windows. Use the barrier screens provided or a gate to reduce the risk of severe burns.
- The glass windows can exceed 500°F at full capacity.
- Always keep the appliance clear and free from combustible materials, gasoline, and other flammable vapors and liquids.
- Be aware of hot wall surfaces! The walls directly above the fireplace can get very hot when the fireplace heats. Although safe, it may reach temperatures in excess of 200°F (93°C) depending on choice of optional accessories. Do not touch!
- Be aware of hot hearth/floor surfaces! Any projections directly around the fireplace can get very hot when the fireplace heats. Although safe, they may reach temperatures in excess of 200°F (93°C) depending on elevation of hearth. Be careful of touching these! Temperature of projection surfaces will be reduced when the barrier screen is installed.
- Some materials or items, although safe, may discolor, shrink, warp, crack, peel, and so on because of the heat produced by the fireplace. Avoid placing candles, paintings, photos and other combustible objects sensitive to heat or furniture within 36 inches (0.9 m) around the fireplace.
- Due to it high temperatures, the appliance should be located out of traffic areas and away from furniture and draperies.
- Clothing or flammable material should not be placed on or near the appliance.

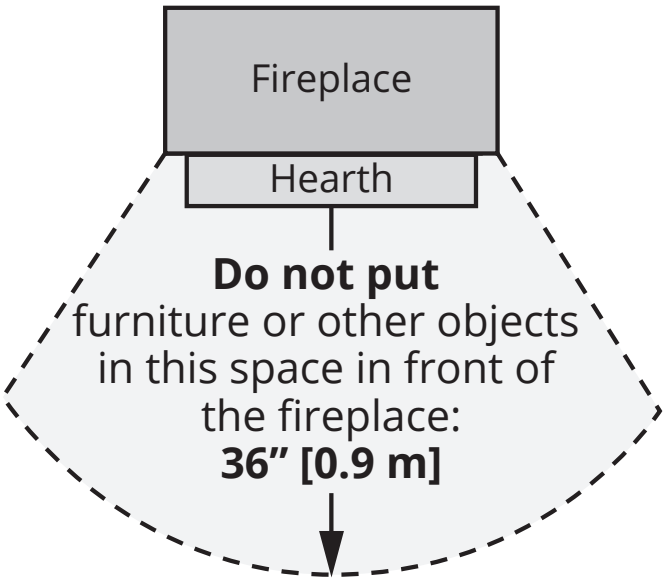

Barrier Screen and Safety

- A barrier designed to reduce the risk of burns from the hot viewing glass is provided with this appliance and shall be installed for the protection of children and other at-risk individuals.
- Children and adults should be alerted to the hazards of high surface temperature and should stay away to avoid burns or clothing ignition.
- Young children should be carefully supervised when they are in the same room as the appliance. Toddlers, young children, and others may be susceptible to accidental contact burns. A physical barrier is recommended if there are at-risk individuals in the house. To restrict access to a fireplace or stove, install an adjustable safety gate to keep toddlers, young children, and other at-risk individuals out of the room and away from hot surfaces.
- Any safety screen, guard, or barrier removed for servicing an appliance must be replaced prior to operating the appliance.

Fireplace Safety

Glass windows

WARNING

Do not operate this appliance with the glass front removed, cracked, or broken.

Do not strike or slam the glass front.

Replacement of the glass front should be performed by a licensed or qualified service person.

- The glass front assemblies must be in place and sealed before the unit can be placed into safe operation.
- The glass front assemblies must only be replaced as complete units, as supplied by the fireplace manufacturer. No substitute material may be used.
- Do not use abrasive cleaners on the glass front assemblies. Do not attempt to clean the glass when it is hot.

Venting

- This unit must be used with a vent system as described in this manual. No other vent system or components may be used.
- Never obstruct the flow of combustion and ventilation air. Keep the front of the appliance clear of all obstacles and materials for servicing and proper operation.
- This gas fireplace and vent assembly must be vented directly to the outside and must never be attached to a chimney serving a separate solid fuel burning appliance. Each gas appliance must use a separate vent system. Common vent systems are prohibited.

Intended use

- This appliance is designed and approved as a supplemental heater and provides the potential for most energy conservation when used while attended. The use of an alternate primary heat source is advisable.
- This unit is not for use with solid fuel.
- Do not use this heater as a temporary source of heat during construction.

Installation and Servicing

- Installation and repair should be done by a qualified service person. The appliance should be inspected before use and at least annually by a professional service person. More frequent cleaning might be required due to excessive lint from carpeting, bedding material, et cetera. It is imperative that control compartments, burners, and circulating air passageways of the appliance be kept clean.
- Do not use this appliance is any part has been under water. Immediately call a qualified service technician to inspect the appliance and to replace any part of the control system and any gas control that has been under water.

WARNING

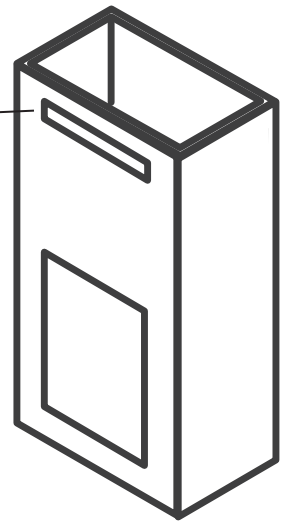

Optional HeatShift System:
Do not cover or place items in front of outlet!

Specifications

Approval & Codes

This appliance is certified to ANSI Z21.88/CSA 2.33 American National Standard / CSA Standard for Vented Gas Fireplace Heaters for use in Canada and USA, and to CGA 2.17-M91 High Altitude Standard in Canada. This appliance is for direct vent installations.

This appliance complies with CSA P.4.1-15 Testing method for measuring annual fireplace efficiencies.

The installation must conform to local codes or, in the absence of local codes, with the National Fuel Gas Code, ANSI Z223.1/NFPA 54 or the Natural Gas and Propane Installation Code CAN/CGA-B149.1. Only qualified licensed or trained personnel should install this appliance.

This appliance must be electrically grounded in accordance with local codes, or, in the absence of local codes, with the National Electrical Code, ANSI/NFPA 70 or the Canadian Electrical Code, CSA C22.1.

Ratings

Model	200AN	200AP
Gas	Natural	Propane
Altitude (Ft.)*	0-4,500 feet*	
Input Maximum (Btu/h)	20,000	20,000
Input Minimum (Btu/h)	9,500	10,000
Manifold Pressure (in w.c.)	3.2”	9.5”
Minimum Supply Pressure (in w.c.)	5”	11”
Maximum Supply Pressure (in w.c.)	10”	14”
Main Burner Injector Marking	580	54
Pilot Injector Marking	BL22N	BL14LP
Min. Rate By-Pass Screw	150	105

*High Altitude Installations

Input ratings are shown in BTU per hour and are certified without deration for elevations up to 4,500 feet (1,370 m) above sea level.

For elevations above 4,500 feet (1,370 m) in USA, installations must be in accordance with the current ANSI Z223.1 and/or local codes having jurisdiction. Heating value of gas in some areas is reduced to compensate for elevation—consult your local gas utility to confirm.

For installations at elevations above 4,500 feet (1,370 m) in Canada, please consult provincial and/or local authorities having jurisdiction.

Supply Gas

Heater engine 200AN is used with natural gas.

Heater engine 200AP is used with propane gas.

The supply pressure must be between the limits shown in the Ratings table.

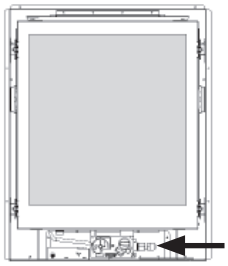

The supply connection is 3/8” NPT male located at the left side of the control valve. The opening for the gas supply line is at the right side of the appliance.

Gas Conversion

The 200 fireplace is offered with natural gas or propane gas. It can be converted from one gas to the other. See installation manual supplied with the gas conversion kit for more information.

Electrical

The 200 is designed to run on battery power and does not require an electrical power source to operate as a heater. However, it requires electrical power to operate optional 255CFK Circulating Fan Kit or GV60WiFi kit.

⚠ WARNING

NO ELECTRICAL CONNECTION ALLOWED for any outdoor installation!

HeatShift™System, optional

The 200 is designed to allow the installation of the optional HeatShift, a convection system that redistributes the warm air flow away from the fireplace opening to a more desirable location using natural convection, without use of a fan.

The warm air flow may be relocated to a position higher up the wall, or even to another room. The result is much cooler wall temperatures above the fireplace opening for locating televisions, artwork, etc.

Please note that the framing and mantel clearances are affected by the installation of the HeatShift System. Refer to *Appendix C – HeatShift System®* pages 73–80 for more information.

Outdoor Conversion Kit

The 200 models are supplied standard for indoor applications and may be adapted for installation in specific “outdoor” applications protected from weather as defined in the GV60CKO Outdoor Conversion Kit manual.

Kits & Accessories

Required Kits

Fuel Beds (choose one)		
205LSK	Traditional Logs	
205BLK	Birch Logs	
205DWK	Driftwood Logs	
205CSK	Coal Set + Fire back panel	
Liners (choose one)		
260PBL	Plain Black Liners	
265CBL	Charcoal Brick Liners	
270RGL	Reflective Glass Liners	
Fronts (choose one)		**Barrier Screen**
230CIK	Clean Install Kit	4009223
246LF	Ledgeview Front, two colors	4009189
263RCB	Richmond Cast Front	4010560
245CFV	Clearview Vintage Front	4009139
235BPB1	3-Sided Backing Plate, black, 26" wide, for 245CFV	
235BPB2	3-Sided Backing Plate, black, 36" wide, for 245CFV	
235SBPB1	3-Sided Reduced Depth Backing Plate, black, 26" wide, 2" return, for 245CFV—**FOR INSERT ONLY**	
Venting Components		
See Approved Venting Components list next pages		

Optional Accessories

Gas Conversion Kits	
200NGK	Conversion to natural gas
200PGK	Conversion to propane gas
Other Accessories	
LDK12	HeatShift 18" Plenum, 4" collars
LDK13	Finishing Frame for LDK12, white
LDK11	HeatShift 4" liners, compressed
255CFK*	Circulating Fan Kit
1265WSK	Wall Switch Kit
RBWSK	Remote Battery & Wall Switch Kit
GV60CKO*	Outdoor Conversion Kit
GV60WIFI*	WiFi Module (requires V-Module + P2-WPK)
GV60VM*	V-Module (for WiFi if 255CFK not installed)
P2-WPK*	Power WiFi Kit (for WiFi, if 255CFK not installed)
GV60PAK*	AC Adapter
Hearth Gate	Hearth gates such as Cardinal's VersaGates are available at retail stores carrying safety products for children.

WARNING

***NO ELECTRICAL CONNECTION ALLOWED for any outdoor installation!**

Information accurate at the time of printing and subject to change without notice.

Approved Venting Components

Venting Parts Description			Venting Parts Code / availability by Manufacturer				
			DURA-VENT	SELKIRK	ICC EXCEL DIRECT	MILES INDUSTRIES	BDM
Termination Caps	Horizontal	Standard Co-axial	46DVA-HC	4DT-HC 4DT-HCR round	TM-4HT	658DVK2	DVR6-HCP
		Deluxe Co-axial	—	—	TM-4RHT TM-4DHT	—	DVR6-HC
		High Wind Co-axial	—	—	—	—	—
		Co-linear	—	—	—	720SWK	—
	Vertical	Standard Co-axial	46DVA-VC	4DT-VT	—	—	—
		High Wind Co-axial	46DVA-VCH	—	TM-4SVT	—	—
		Extended Co-axial	46DVA-VCE	—	—	—	—
		Co-linear	46DVA-CL33 46DVA-CL33H 46DVA-33P	—	TM-IVT	559CLT	940033B 940033HWS 940033RD
	Snorkel, 14” Rise		46DVA-SNK14	—	TM-4ST14	—	—
Vent Adapters / Couplers		Universal Adapter 3” Flex Coupler	2150	—	TM-CFAA3	—	95090390
		Co-linear Flex Connector	46DVA-ADF	—	—	—	—
		Co-axial-to-Co-linear Adapter	46DVA-GCL 46DVA-CLAA	—	TM-4CAA	1156CLA	DVR6-A33
		Co-linear-to-Co-axial Adapter	46DVA-GK 46DVA-CLTA	—	TM-4CTA	—	—
		DV to B-Vent Adapter	—	—	—	DVA5BV	—
		Co-axial-to-Co-axial Flex Adapter	—	—	—	590CFA (5” x 3”) 200CFA (5” x 3”)	—
		Adapter for Sidewall Terminal MTO-4 or MTO-4F	—	—	—	DVA-M4/7 w/DuraVent venting only	—
Aluminum Flexible Liner		3” diameter	NOTE: 2-ply liner approved to CAN/ULC S635 suitable for venting gas appliances. As manufactured by Z-Flex, Flexmasters or others.				
			2280 Series	AF3-35L	TM-ALK33 TM-ALT33	590FVK2 (5” x 3” kit)	952703
Adjustable Pipe Length and Pipe Extensions 4” x 6-5/8”		Galvanized or Black	46DVA-08A 46DVA-08AB (3” to 7”)	—	—	—	DVR6-08A DVR6-08AB
		Galvanized or Black	46DVA-16A 46DVA-16AB (3” to 14-1/2”)	—	TC-4DLS1 TC-4DLS1B	—	DVR6-16A DVR6-16AB
		Galvanized or Black	46DVA-17TA 46DVA-17TAB (11” to 17”)	—	TC-4DLS2 TC-4DLS2B (1-7/8” – 21”)	—	—
		Galvanized or Black	46DVA-24TA 46DVA-24TAB (17” to 24”)	—	TC-4DLA30 TC-DLA30B (16.5” – 29”)	—	—
		Co-axial Flex	46DVA-36FF 46DVA-60FF 46DVA-120FF	—	—	—	—
DV Elbows	30°	Galvanized	46DVA-E30	—	—	—	—
	45°	Galvanized	46DVA-E45 (swivel)	4DT-EL45	TE-4DE45	—	DVR6-E45
		Black	46DVA-E45B (swivel)	4DT-EL45(B)	TE-4DE45B	—	DVR6-E45B
	60°	Galvanized	46DVA-E60	—	—	—	—
	90°	Galvanized	46DVA-E90 (swivel)	4DT-EL90	TE-4DE90	—	DVR6-E90
		Black	46DAV-E90B (swivel)	4DT-EL90(B)	TE-4DE90B	—	DVR6-E90B

Approved Venting Components

Venting Parts Description			Venting Parts Code / availability by Manufacturer				
			DURA-VENT	SELKIRK	ICC EXCEL DIRECT	MILES INDUSTRIES	BDM
Pipes 4" x 6 5/8" (ID x OD)	6" long	Galvanized	46DVA-06	4DT-06	TC-4DL6	—	DVR6-06
		Black	46DVA-06B	4DT-06(B)	TC-4DL6B		DVR6-06B
	7" long	Galvanized	—	—	—	—	—
		Black					
	9" long	Galvanized	46DVA-09	4DT-09	TC-4DL9	—	DVR6-09
		Black	46DVA-09B	4DT-09(B)	TC-4DL9B		DVR6-09B
	12" long	Galvanized	46DVA-12	4DT-12	TC-4DL1	—	DVR6-12
		Black	46DVA-12B	4DT-12(B)	TC-4DL1B		DVR6-12B
	18" long	Galvanized	46DVA-18	4DT-18	—	—	DVR6-18
		Black	46DVA-18B	4DT-18(B)			DVR6-18B
	24" long	Galvanized	46DVA-24	4DT-24	TC-4DL2	—	DVR6-24
		Black	46DVA-24B	4DT-24(B)	TC-4DL2B		DVR6-24B
	36" long	Galvanized	46DVA-36	4DT-36	TC-4DL3	—	DVR6-36
		Black	46DVA-36B	4DT-36(B)	TC-4DL3B		DVR6-36B
	48" long	Galvanized	46DVA-48	4DT-48	TC-4DL4	—	DVR6-48
		Black	46DVA-48B	4DT-48(B)	TC-4DL4B		DVR6-48B
Flashings	Roof Flashing 0/12-6/12		46DVA-F6	4DT-AF6	TF-4FA	—	DVR6-AF012
	Roof Flashing 7/12-12/12		46DVA-F12	4DT-AF12	TF-4FB	—	DVR6-AF712
	Flat Roof Flashing		46DVA-FF	—	TF-4F	559FSK	DVR6-TCF
	Masonry Flashing		—	—	TF-4MF	—	—
	New Siding Flashing		—	—	—	658NSFK	—
Various Venting System Parts	Wall Thimble		46DVA-WT	4DT-WT1	TM-4WT	—	DVR6-WTU
	Storm Collar		46DVA-SC	4DT-SC	TM-SC	—	DVT68-SC
	Decorative Plate		46DVA-DC	—	TM-4TR TM-4TP	—	DVR6-DC
	Ceiling Support	Cathedral	46DVA-CS	4DT-CCS	TM-4SS	—	DVR6-CS
		Regular	—	4DT-CS	—	—	—
	Ceiling Firestop		46DVA-FS	4DT-FS	TM-4RDS TM-CS	—	DVR6-CFS
	Attic Radiation Shield / Firestop		46DVA-IS	ADT-41S	TM-4AS	—	DVR6-AIS
	Wall Strap		46DVA-WS	4DTWSB	TM-WS	—	DVR6-WS
	Vinyl Siding Standoff		46DVA-VSS	4DT-VSS (before siding) 4DT-VSSB (after siding)	TM-VSS	—	DVR6-VSS
	Elbow Strap / Offset Support		46DVA-ES	4DT-OS	TM-OS	—	DVR6-ES
	Terminal Guard		46DVA-WG	—	TM-HTS TM-RHTS	845TG 658TG	DVR6-SHRD

Notes:
1. Follow instructions supplied with each manufacturer's components.
2. Unless otherwise specified, all the parts and assemblies from the above table are to be used with 4" x 6-5/8" pipes.
3. Do not mix components from different vent manufacturers except those of Miles Industries which have been approved with other manufacturers'.

Dimensions & Location

Dimensions

NOTE

Dimensions for installation into combustible framing. For insert application into an existing solid-fuel burning cavity and chimney, see page 27.

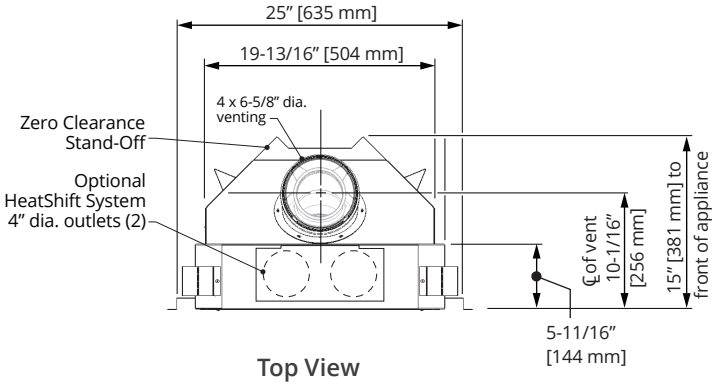

Top View

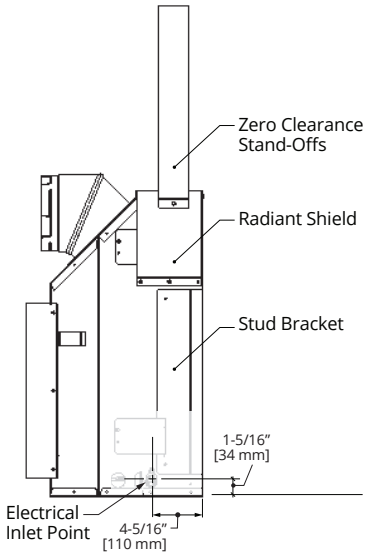

Left Side View

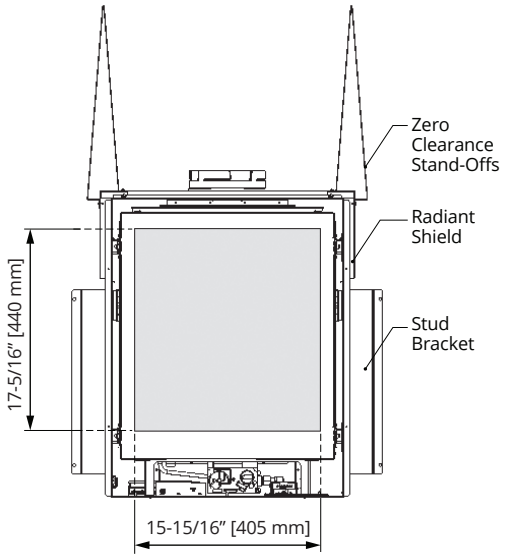

Front View

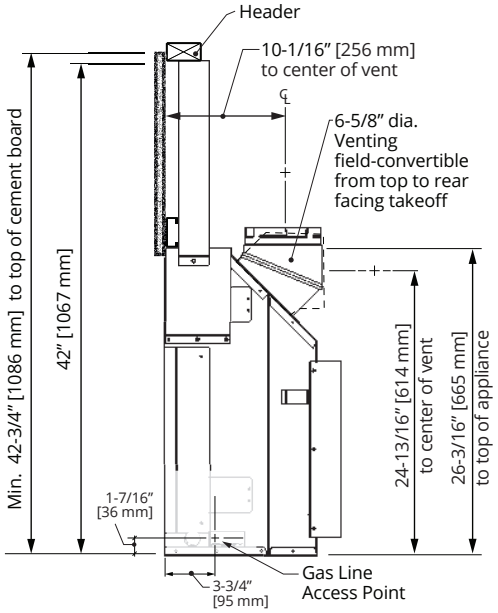

Right Side View

Location

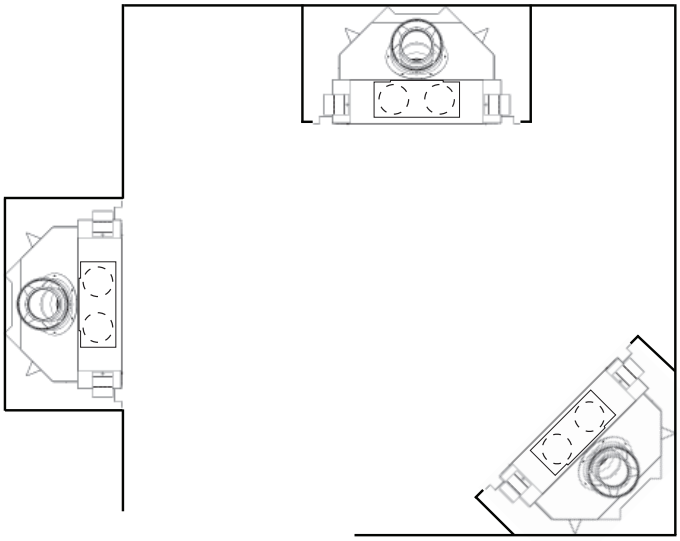

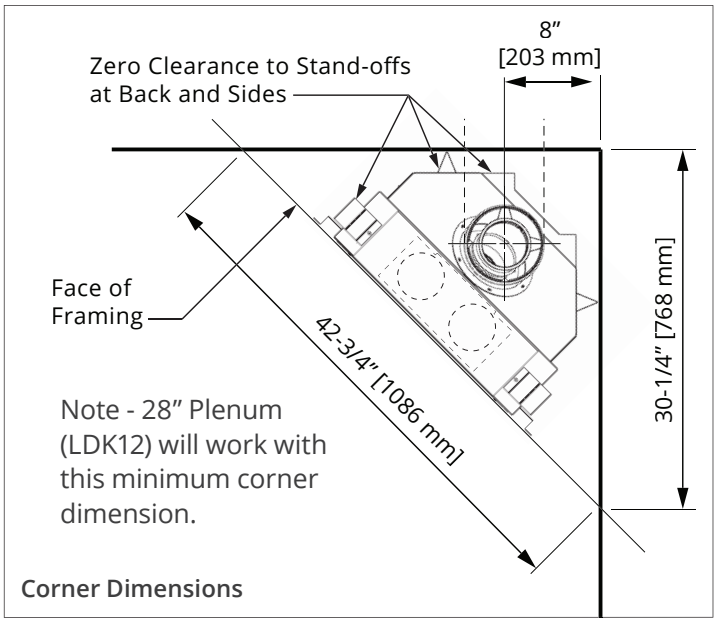

Corner Dimensions

Preparation

Attention

ONLY qualified licensed or trained personnel should install this appliance.

BEFORE YOUR START, YOU NEED TO KNOW FROM THE HOMEOWNER:

- Required accessories to install with fireplace (liners, fuel bed, front, backing plate);
- HeatShift System used or not;
- Height of appliance and hearth, if used;
- Thickness an type of wall finish around appliance's opening;
- Venting configuration;
- Optional accessories, if used.

WARNING

NO ELECTRICAL CONNECTION ALLOWED for any outdoor installation!

Preparation

Overview

NOTE

This appliance may be installed in outdoor, weather protected environments as defined in the GV60CKO Outdoor Conversion Kit instruction manual.

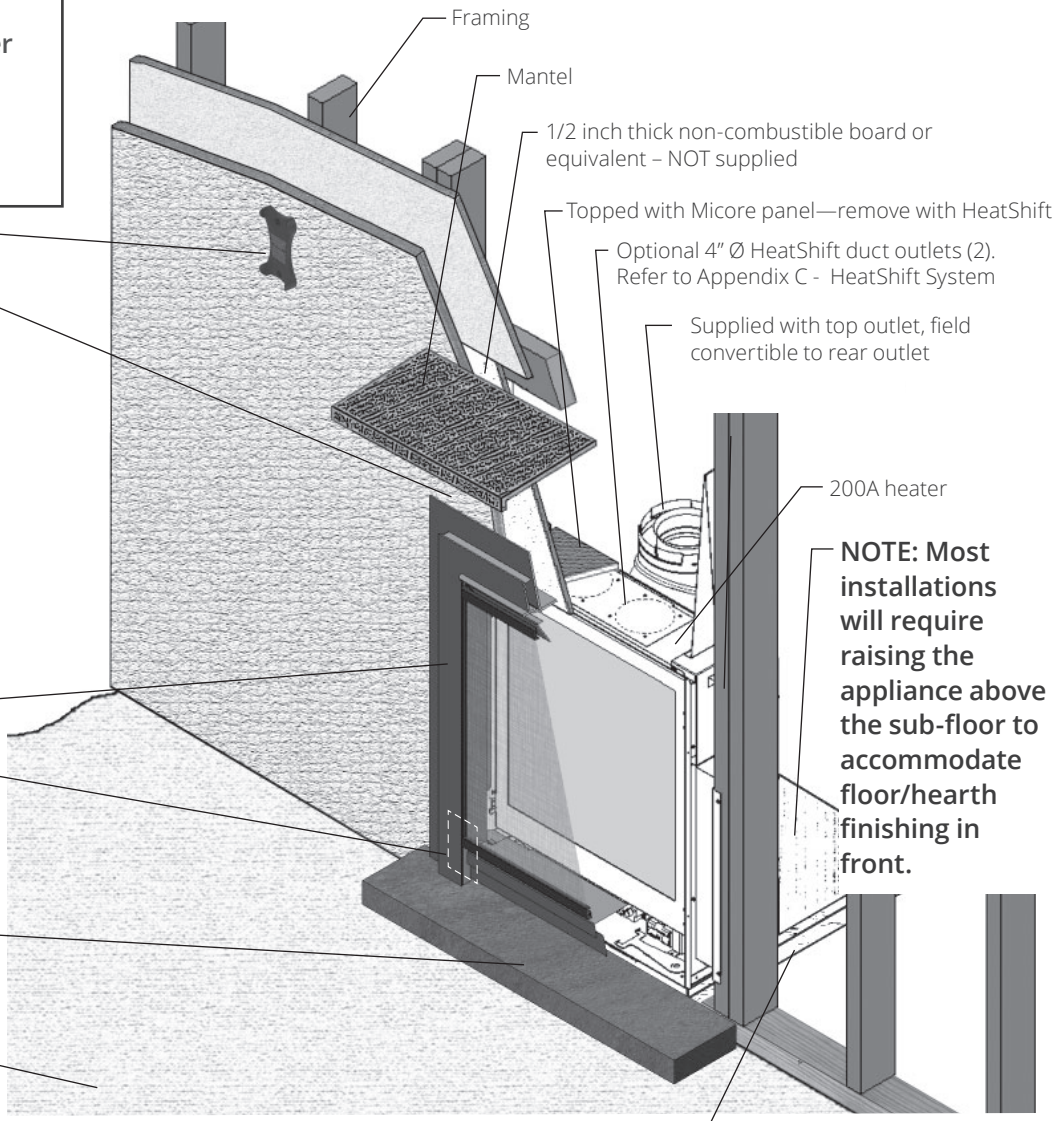

Remote Handset Wall Holder

Wall Finish
NOTE: With HeatShift, the non-combustible board can be covered entirely with combustible material up to 1" thick.
Without HeatShift, the non-combustible board must be covered with non-combustible materials up to 31-1/2" high measured from the bottom of appliance.
See *Clearances to Combustibles* page 13.

Trim with Barrier Screen (required)

Electrical junction box (optional) locates here inside appliance case.
DO NOT connect if installing outdoors!

Optional Hearth
Combustible material allowed if flush with or below base of appliance

Combustible Floor
allowed if flush with or below base of appliance

Combustible framing allowed beneath fireplace.
When the appliance is installed directly on carpeting, tile or other combustible material other than wood flooring, the appliance shall be installed on a metal or wood panel extending the full width and depth of the appliance.

⚠ WARNING

SAFETY WARNING! The P2 is a very effective radiant heater.

HOT WALL SURFACES! The wall directly above the fireplace requires non-combustible materials and, although safe, it may reach temperatures in excess of 200° F depending on choice of trims. Do not touch. Finish the wall using materials suitable for these temperatures.

HEARTH/FLOOR SURFACES! The hearth/floor in front of the heater can get very hot. Locating the unit raised above the hearth/floor and ensuring the screen front is installed will help reduce hearth temperatures. Note that some materials, although safe can degrade due to heat—take this into consideration when choosing materials.

Combustible Mantel/Finish Above Appliance—Left Side View

NOTE

Use of the optional HeatShift System affects mantel clearances as shown below—see *Appendix C – HeatShift System®* pages 73–80 in this manual for installation details.

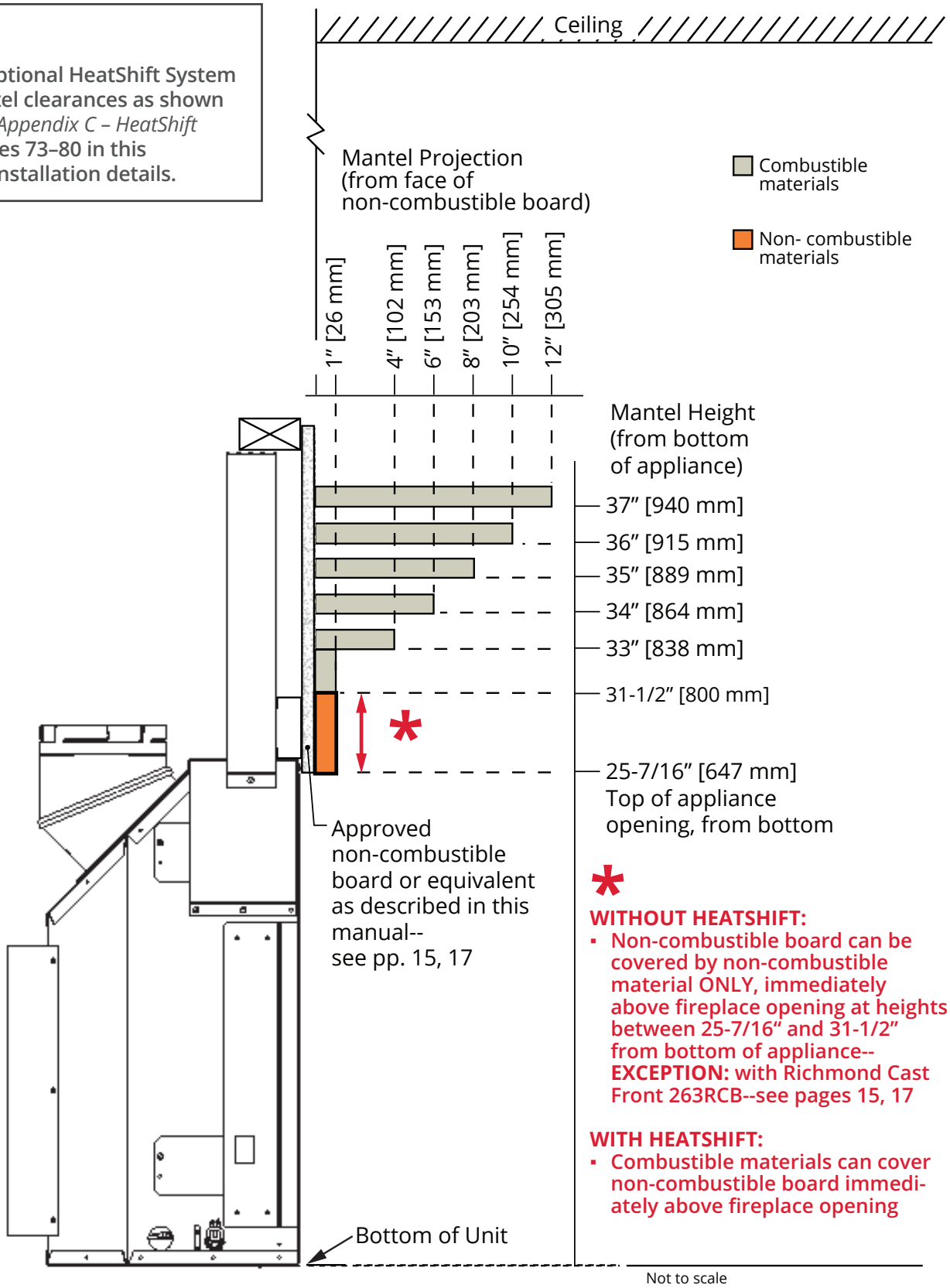

*

WITHOUT HEATSHIFT:

- Non-combustible board can be covered by non-combustible material ONLY, immediately above fireplace opening at heights between 25-7/16" and 31-1/2" from bottom of appliance-- **EXCEPTION:** with Richmond Cast Front 263RCB--see pages 15, 17

WITH HEATSHIFT:

- Combustible materials can cover non-combustible board immediately above fireplace opening

Combustible Sidewall / Mantel Leg—Top View

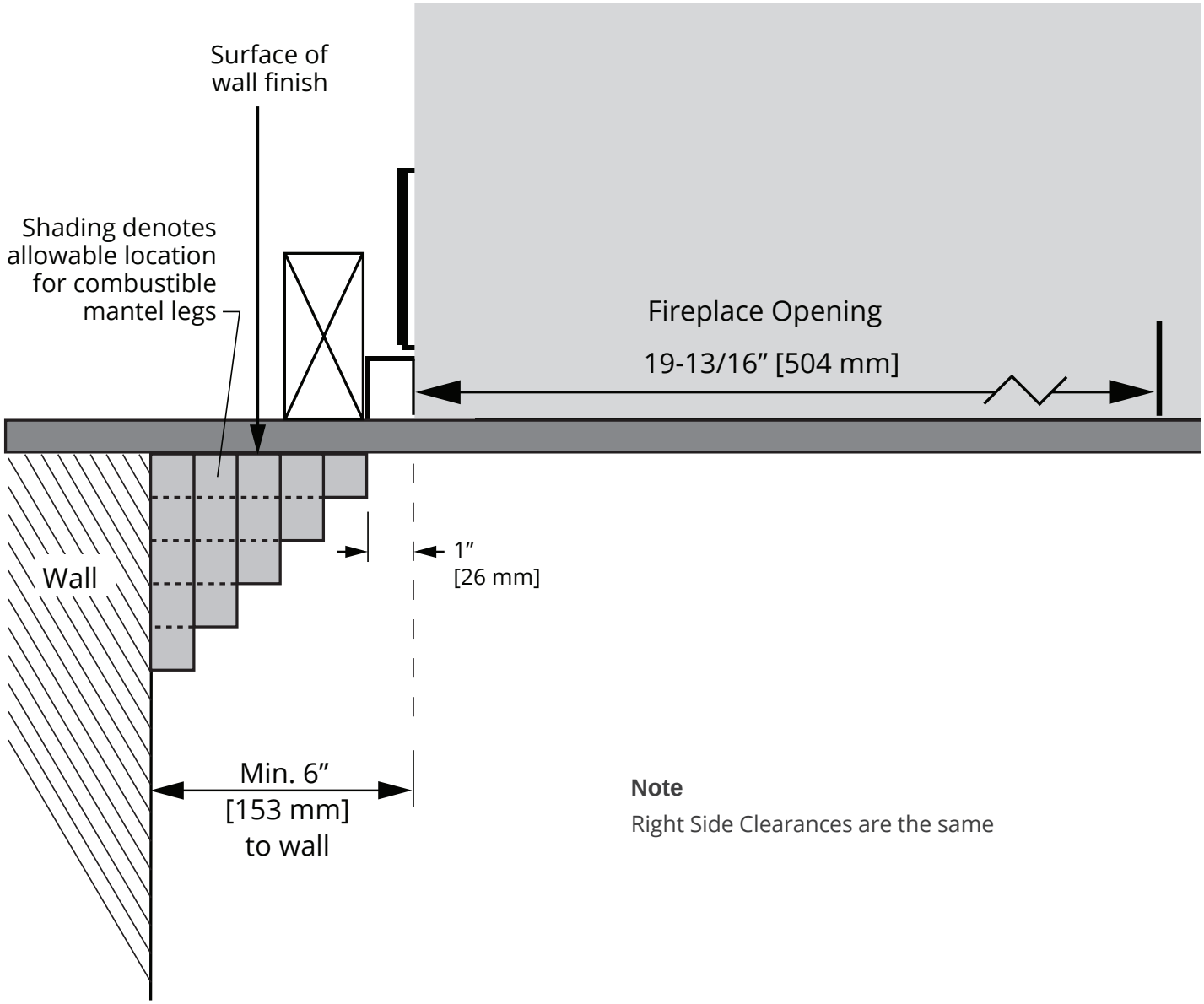

Note

Right Side Clearances are the same

NOTE

Use of the optional HeatShift System affects framing—see *Appendix C – HeatShift System®* page 79 in this manual for framing details.

Between underside of header and base of heater. Base of heater must be at finished hearth height. However, **please note that the 240LF Ledgeview 4-sided front extend 1-1/2" [38 mm] below the base of heater**. Increase cavity height and shim appliance accordingly.

1/2" [13 mm] thick non-combustible board required above engine (not supplied). See page 15.

Combustible framing allowed beneath fireplace. When the appliance is installed directly on carpeting, tile or other combustible material other than wood flooring, the appliance shall be installed on a metal or wood panel extending the full width and depth of the appliance.

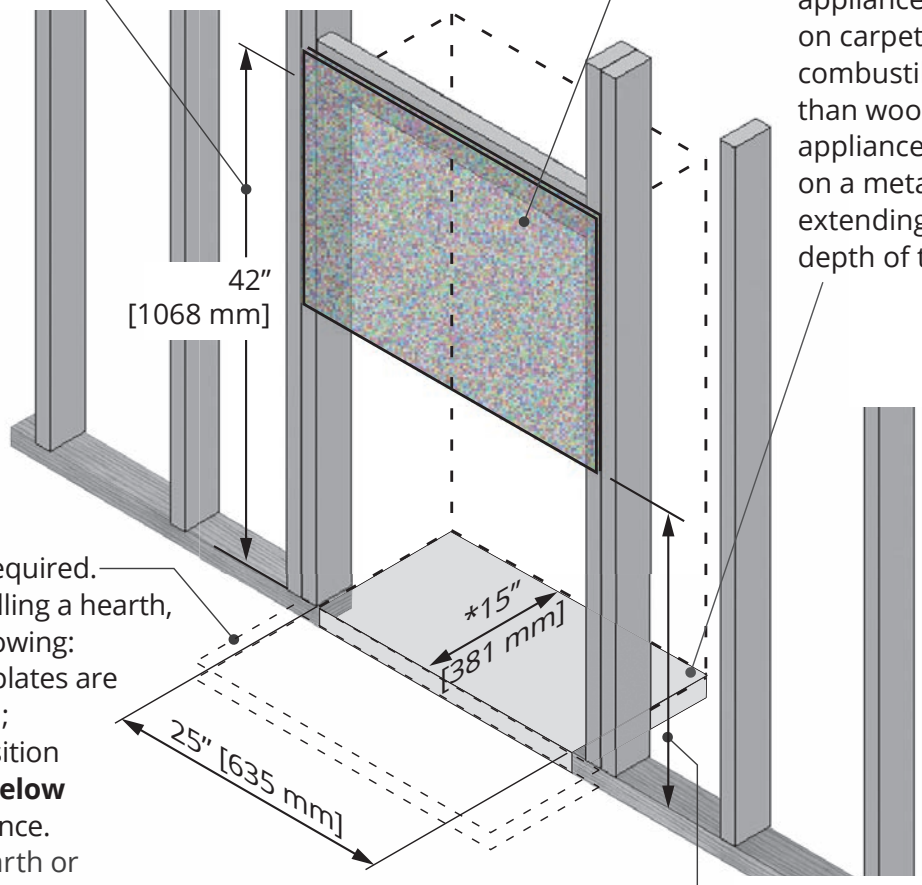

A hearth is not required. However, if installing a hearth, consider the following: 3-sided backing plates are flush with hearth; 4-sided front position 1-1/2" [38 mm] **below** bottom of appliance. Combustible hearth or flooring is allowed if **flush with or below the base of the appliance**.

*Dimension to finished surface of drywall at rear of cavity, if applicable. **NOTE:** When using **263RCB Richmond Cast Front**, minimum depth is 14" [356 mm]

25-7/16" [647 mm] between underside of non-combustible board and base of heater. Non-combustible board overlaps top of appliance by 11/16" [18 mm].
EXCEPTIONS when using **263RCB Richmond Cast Front:**

- **without HeatShift**, underside of board is at 26-3/16" [666 mm] from base of heater
- **with HeatShift,** underside of board **must be** at 31-3/16" [793 mm] from base of heater to allow for HeatShift liners

Built-In Recess Above Fireplace—Top Outlet

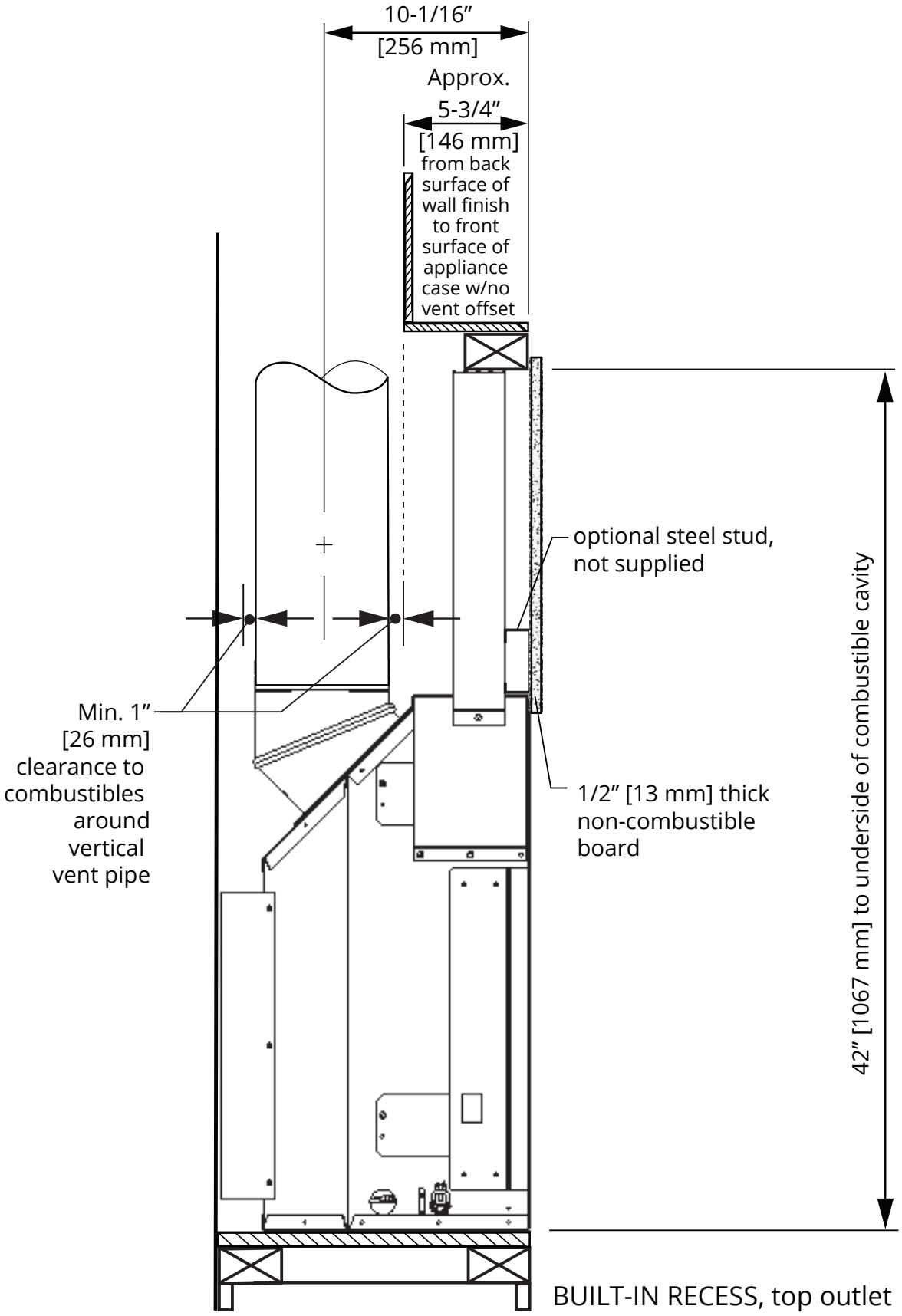

BUILT-IN RECESS, top outlet

Planning Wall Finish

Non-Combustible Materials Specifications

Non-combustible materials will not ignite and burn. Such materials are those consisting entirely of steel, iron, brick, tile, concrete, slate, glass or plasters, or any combination thereof.

Materials that are reported as passing ASTM E 136, Standard Test Method for Behavior of Materials in a Vertical Tube Furnace at 750 °C shall be considered non-combustible materials.

Combustible Materials Specifications

Materials made of or surfaced with wood, compressed paper, plant fibers, plastics, or other material that can ignite and burn, whether flame proofed or not, or plastered or unplastered shall be considered combustible materials.

Non-combustible cement board—ZC applications

With most front trims, the 200 fireplace installed in a zero clearance application will require a 1/2" [13 mm] thick non-combustible cement board or equivalent, to be used as a wall surface immediately above the unit—see illustration for minimum coverage.

Extending the cement board well beyond the minimum shown will help avoid cracking due to differential expansion of materials.

Pre-drill cement board with oversized holes and do not over-tighten screws to avoid cracking due to heat expansion.

Standard gypsum wall board may be used beyond the perimeter of the cement board although it is preferable not to change materials to help avoid cracking.

Finishing around trims

Additional non-combustible material such as tile and others may be applied over top of the wall surface or you may choose to leave it finished clean with no tile.

Be aware that a front is always required, a backing plate is too in some cases, and the wall finish thickness must be taken into account for all installations other than the 230CIK—Clean Installation Kit.

The 230CIK installs at framing stage and must be installed at the same time as the appliance. Wall finishes cover the kit's panels and butt up to its fireplace opening frame.

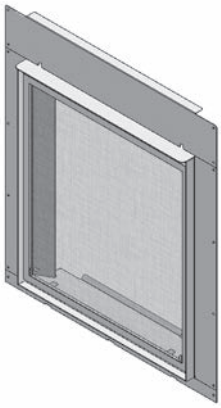

230CIK—Clean Installation Kit

Minimum non-combustible board dimensions

All fronts EXCEPT Richmond Cast Front

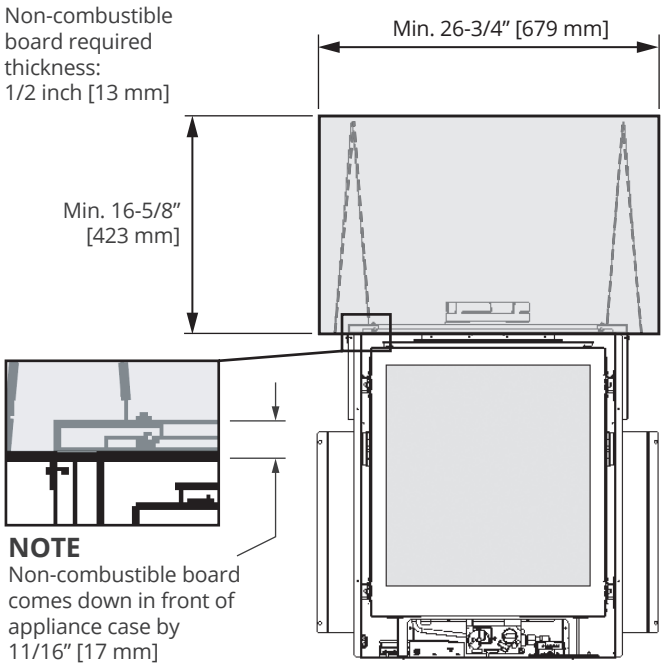

Richmond Cast Front ONLY

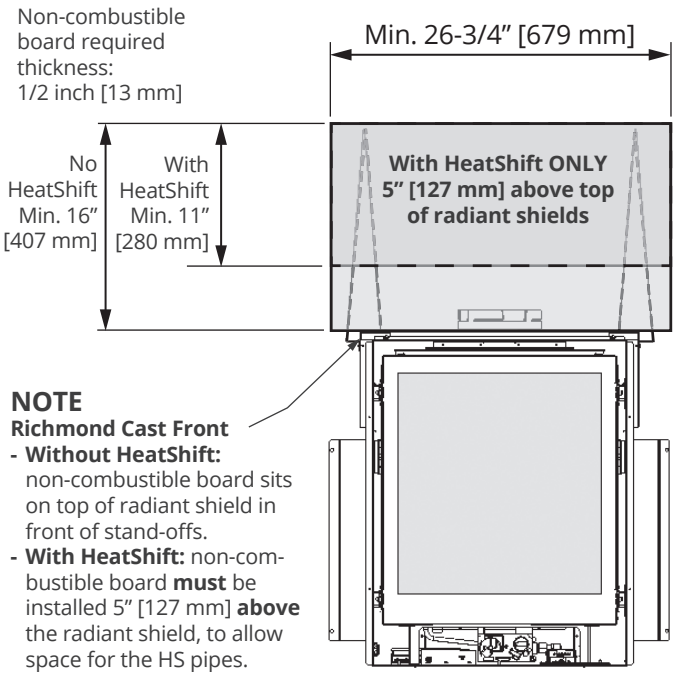

Preparation

Wall Finish

The 245CFV + 235BPB1 or 235BPB2, the 246LF and the 263RCB trims install after wall finish is applied. The perimeter of backing plates overlap wall finish; therefore thickness of any wall finish materials must be taken into consideration. Backing plates and the Richmond Cast Front have enough adjustability to allow up to 3/4" thick non-combustible material applied over top of 1/2" thick non-combustible board.

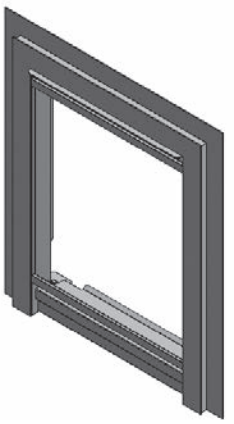

245CFV—Clearview Front shown with 235BPB1—Backing Plate

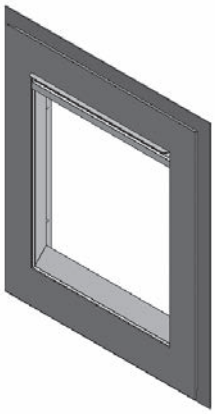

246LF—4-sided Ledgeview

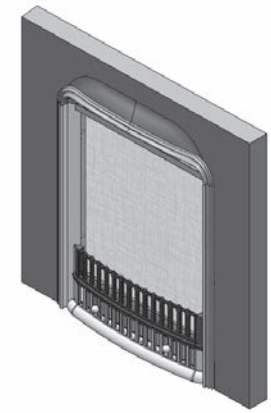

263RCB—Richmond Cast Front

Avoiding Cracking Wall Finishes

We recommend installing the optional HeatShift System to reduce the wall temperatures and minimize the possibility of cracking wall finishes—see *Appendix C – HeatShift System®* pages 73–80**.**

If a clean finish with no tile, etc. is desired, joints in the non-combustible board and the transition to gypsum board will require special attention if future cracking is to be controlled.

Shrinkage and differential movement of the framing and non-combustible wall board can transmit cracking through to tiles, etc.

Be aware that temperatures on the non-combustible wall surface above the appliance can exceed 185°F.

Below are some tips on how to best avoid any cracking:

- Allow materials to dry thoroughly before finishing the wall. Cement board has the ability to absorb up to 30 percent of its weight in water and may shrink as much as 1/8" over a 48" length when drying from a saturated condition. Running the fireplace for an extended period before final finishing will help drive out moisture.
- Always pre-drill screw holes through cement board and use screws with self-milling head.
- Always use mesh tape over joints.
- Always stagger joints in wall board.
- Behind joints, double up studs or use studs "on the flat" to add extra support to the joint. Adhesive on the backside of wall board behind any joints can help control differential movement.
- Use multiple, thinner coats of joint compound and allow to dry thoroughly between coats.
- Ensure framing materials are dry.
- After finishing the wall, introduce heat gradually to slowly dry any excess moisture rather than drying too fast.
- Avoid notching cement board or tiles around corners of window opening and instead provide a joint that intersects the corner.
- Avoid using large, one-piece slab of material with a cut-out in the middle as a surround for the fireplace. Expansion above the opening will cause cracking at inside corners. Provide a joint that intersects the inside corner to avoid cracking.

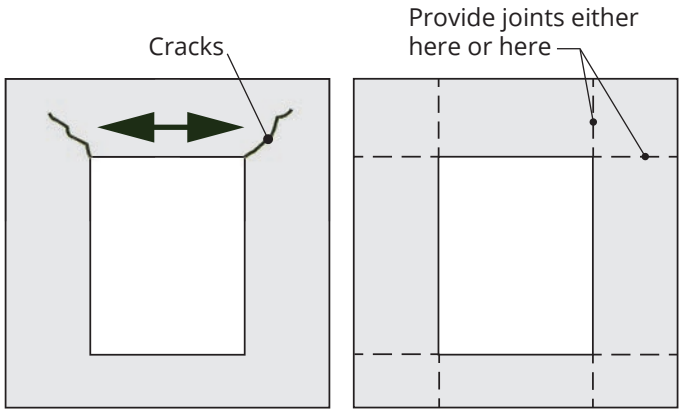

Top or Rear Facing Vent Take-Off

This appliance is supplied standard with a top facing vent take-off and may be converted to a rear facing take-off with no extra parts required—see *Vent Take-Off* page 35.

The P2 200 appliance is supplied with a standard 4 x 6-5/8" co-axial twist-lock type collar.

Vent Material

This appliance is approved for installation using 4 x 6-5/8-inch co-axial direct vent pipe and accessories as listed in *Approved Venting Components* pages 8–9.

This appliance may also be converted to co-linear venting with two 3-inch pipes or co-axial flex with a 3x5 flex pipe for use in solid-fuel burning fireplaces and chimneys using approved adapters and accessories. See *Vent Conversion* pages 26–33 and *Approved Venting Components* pages 8–9.

Vent Sealing

Seal all **outer** co-axial pipe and elbow joints, including sectioned **outer** elbow joints, using high quality, high temperature 2-inch wide self-adhesive aluminum foil tape (Nashua-322-2 brand or similar). Wrap the tape completely around all **outer** joints and press firmly to seal.

A high-temperature black silicone sealant may be used in the **outer** joints as a substitute to foil tape.

Ensure all the pipe joints have a minimum of 1-1/4 inch overlap.

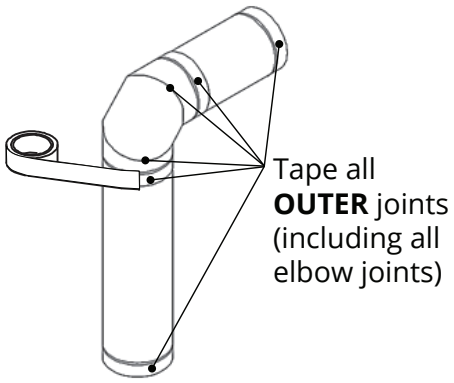

Wall Thickness

The appliance vent is suitable for penetrating a combustible wall assembly up to 14 inches in thickness. A non-combustible wall can be of any thickness up to the maximum horizontal run of vent pipe allowed for the particular installation.

Framing Vent in Combustible Walls & Ceilings

When penetrating through combustible walls and ceilings, frame a minimum of 10 inches x 10 inches opening and ensure that the insulation is kept clear of the vent pipe using either a wall thimble or an attic insulation shield. Follow the installation instructions supplied with the individual venting components.

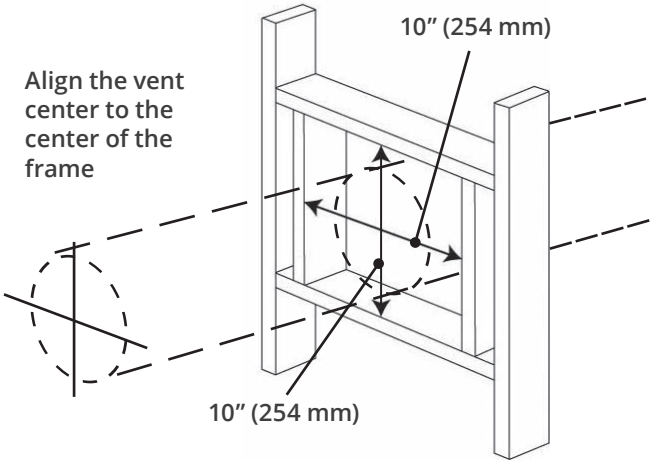

Important Installer Notice – Weather Sealing & Vapor Barriers

It is the installer's responsibility to ensure that vent installations through exterior walls are caulked and weatherproofed in such a manner as to:

- Prevent rain water from entering the wall from the weather side by adequately caulking the outer vent plate to the exterior wall surface.
- Prevent moisture inside the home from penetrating into the wall structure by ensuring the inside wall plate is adequately sealed to the inside vapor barrier.
- Prevent rain water and moisture from entering the walls by sealing the joints between the outer vent tube and the inner and outer wall plates.

We recommend the use of a high quality polyurethane sealant.

All horizontal pipe runs must be graded 1/4 inch per foot upwards in the direction of the exhaust flow. The final pipe length, when terminating through the wall may be graded downwards slightly to prevent water migration.

Typical Co-Axial Venting Components

See venting accessories list on pages 8-9 for allowable components.

IMPORTANT

Provide support for vertical pipe runs, particularly offsets. Do not rely on the appliance for support of long vertical pipe runs. Horizontal pipe runs should be supported every 4 feet using strapping.

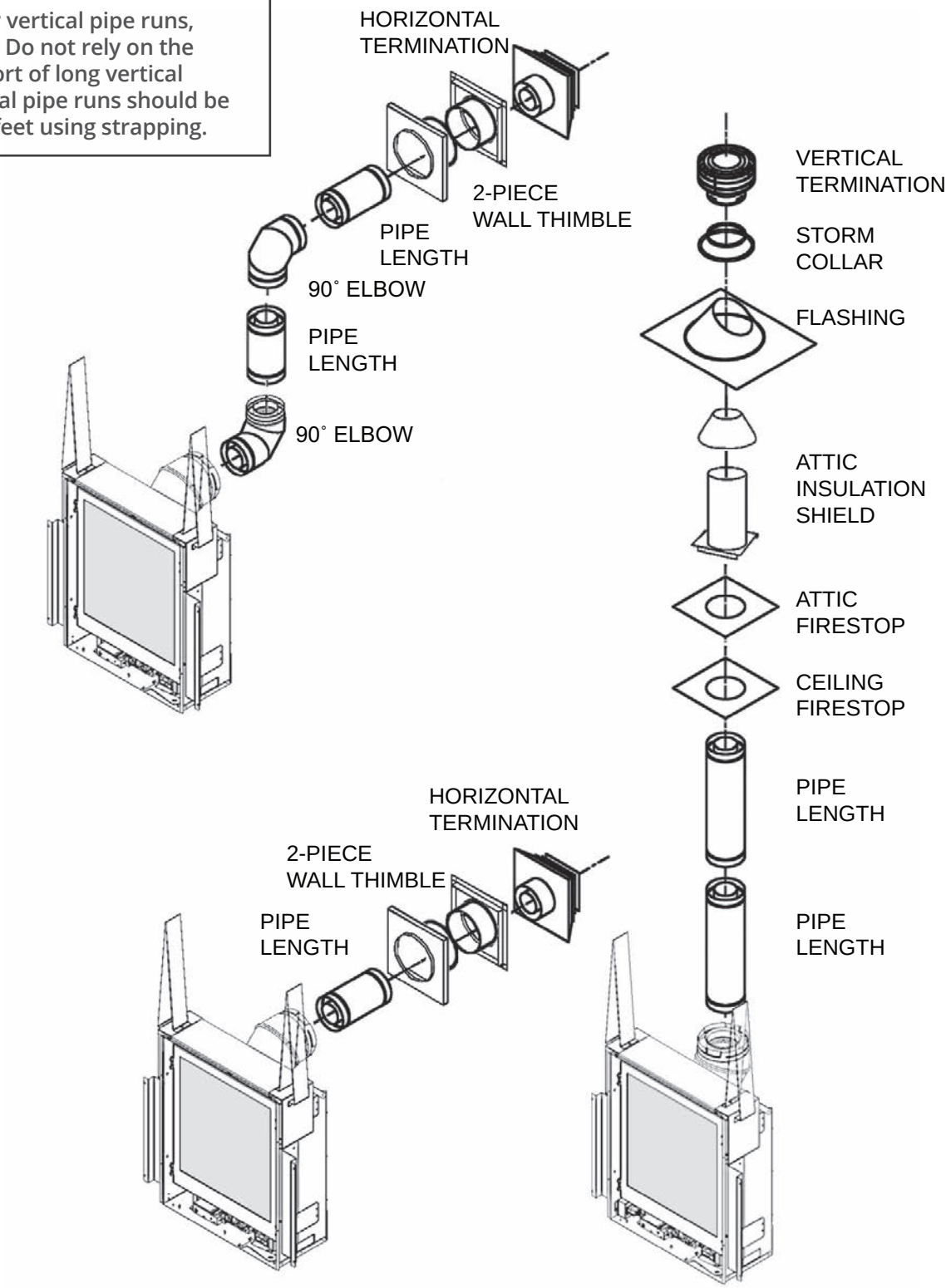

How to Read the Venting Chart

The chart below applies to co-axial roof or wall termination.

1. Maximum 18 inches horizontal pipe section allowed with no vertical rise in vent system. 45 degrees elbows ok on horizontal plane.
2. The total length of the vent pipe cannot exceed 40 feet.
3. The minimum vertical height with roof termination is 6 feet.
4. Any combination of rise and run can be used as long as they are within the allowable limits shown on the chart below.
5. A maximum of 4 x 90 degrees elbows—or equivalent (2 x 45 degrees = 90 degrees)—can be used.
6. Each 90 degrees elbow installed on the horizontal plane is equivalent to a 3 feet horizontal pipe; therefore, 3 feet must be subtracted from allowable horizontal run. (45 degrees elbow is equivalent to 18 inches horizontal pipe.)
7. All horizontal pipe runs must be graded 1/4 inch per foot upwards in the direction of the exhaust flow. The final pipe length, when terminating through the wall may be graded downwards slightly to prevent water migration.
8. A restrictor adjustment is required for most installations having a vertical rise—see *Restrictor* page 23.

Venting Chart

Allowable Co-Axial Vent Configurations with restrictor positions

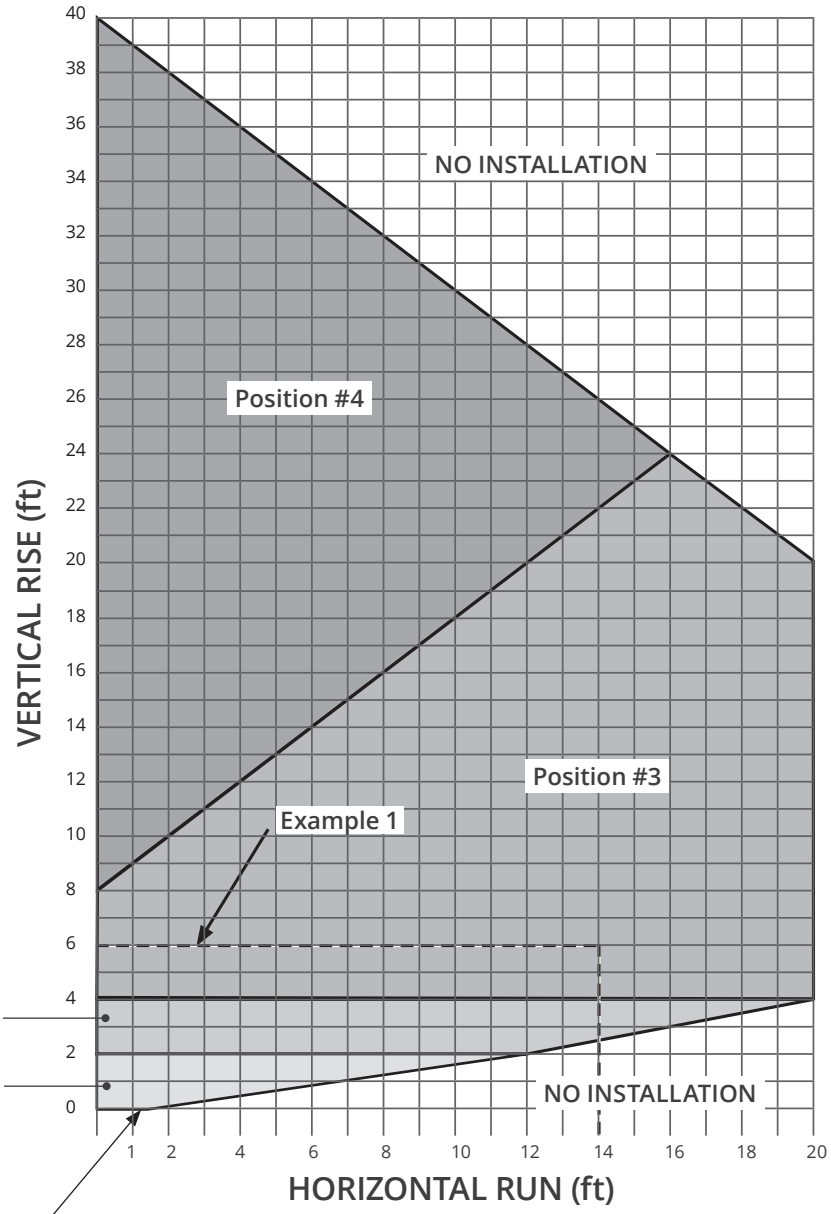

18" maximum horizontal without vertical rise—no restrictor needed

Example 1
V Value = V1 (3') + V2 (2') + V3 (1')= 6'
H Value = H1 (12') + H2 (2') = 14'
Restrictor position #3 required

Venting Configurations—With Vertical Rise

4 x 90° ELBOWS MAXIMUM
(or equivalent)

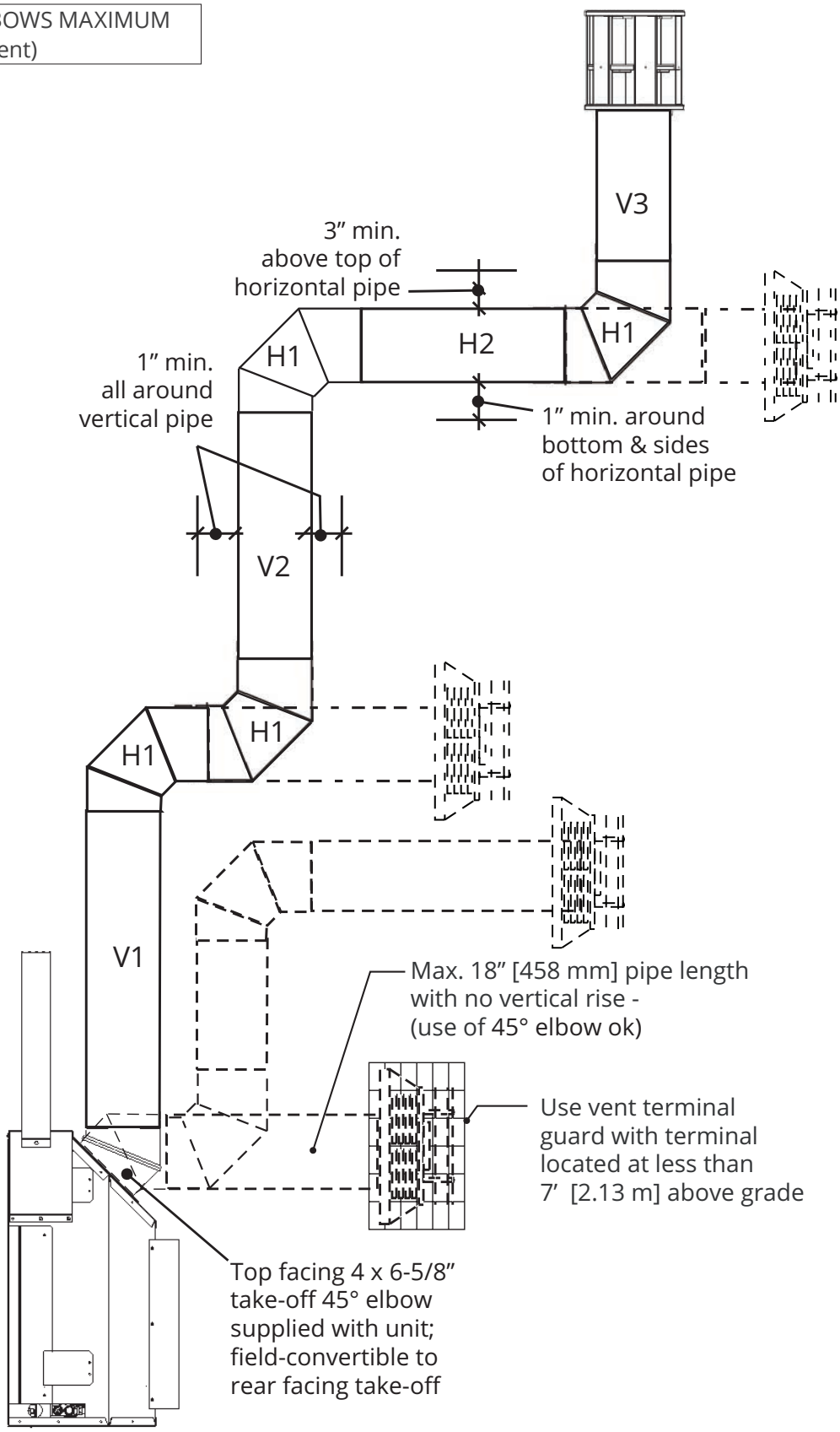

Restrictor

MOST INSTALLATIONS REQUIRE A RESTRICTOR for improved flame picture and performance **except when rear vented with no rise in the vent system**.

The restrictor must be installed in the roof of the firebox as illustrated at the right. Its position depends of the venting system—see step 1 below.

When required, install the restrictor before placing the top liner panel which will cover it. Should subsequent adjustment be required, you will need to remove the top liner panel—see page 49.

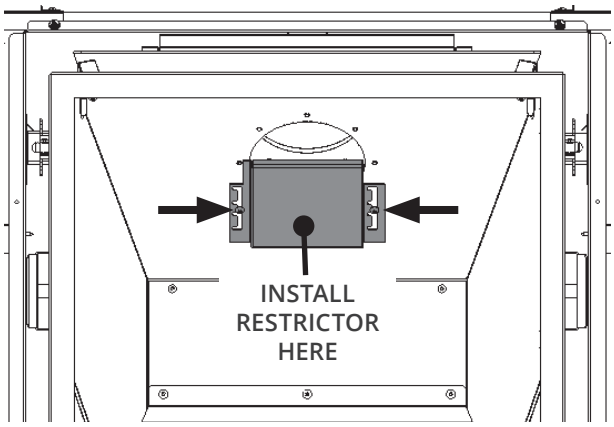

This unit is supplied with a restrictor having four different positions or settings. The level of restriction required depends on the vertical rise in the venting system and, to a lesser degree, the horizontal run and number of elbows.

The amount of restriction is based on laboratory tests. The ideal restrictor position may vary slightly, especially when the vent pipe length is near the limits of the acceptable configurations for each type of restrictor.

The chart on page 21 shows the vent restrictor position required relative to the length of the vent pipe.

To set the restrictor position:

1. Establish the required position of the restrictor looking up the vent chart on page 21.
2. Remove the screws (2) on each side of the **port in the firebox roof.**
3. Ensuring the proper orientation of the restrictor, place it over the screw holes in the required position.

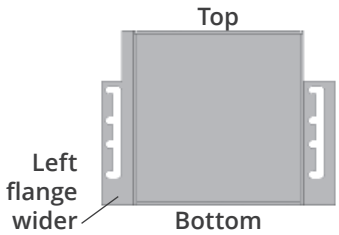

4. Secure with the screws removed in step 2.

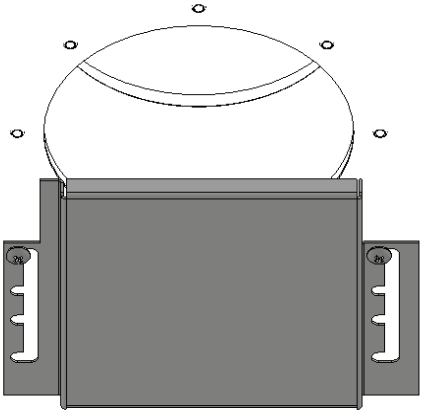

Position #1

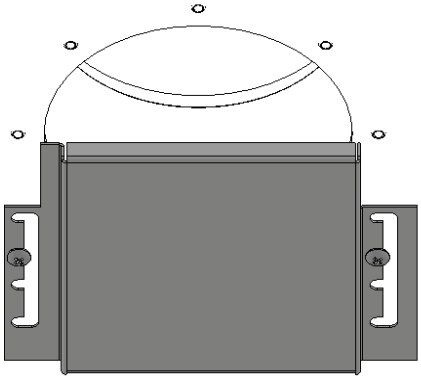

Position #2

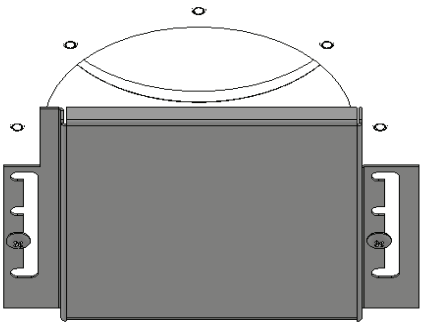

Position #3

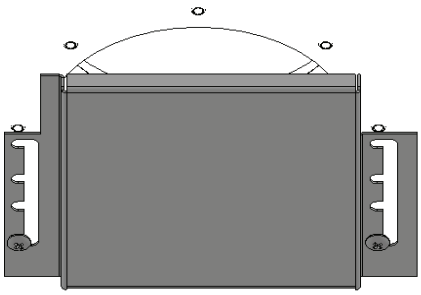

Position #4

Horizontal Vent Termination Location

- The vent terminal must be located on an outside wall or through the roof.
- This direct vent appliance is designed to operate when an undisturbed airflow hits the outside vent terminal from any direction.
- The minimum clearances from this terminal that must be maintained when located on an outside wall are shown in figure below. Any reduction in these clearances could result in a disruption of the airflow or a safety hazard. Local codes or regulations may require greater clearances.
- The vent terminal must not be recessed into a wall or siding.
- The vent terminal should be positioned where any snowdrifts will not cover it.
- Sidewall vent terminations require a terminal guard such as 658TG or 845TG when accessible—within 7' of ground.

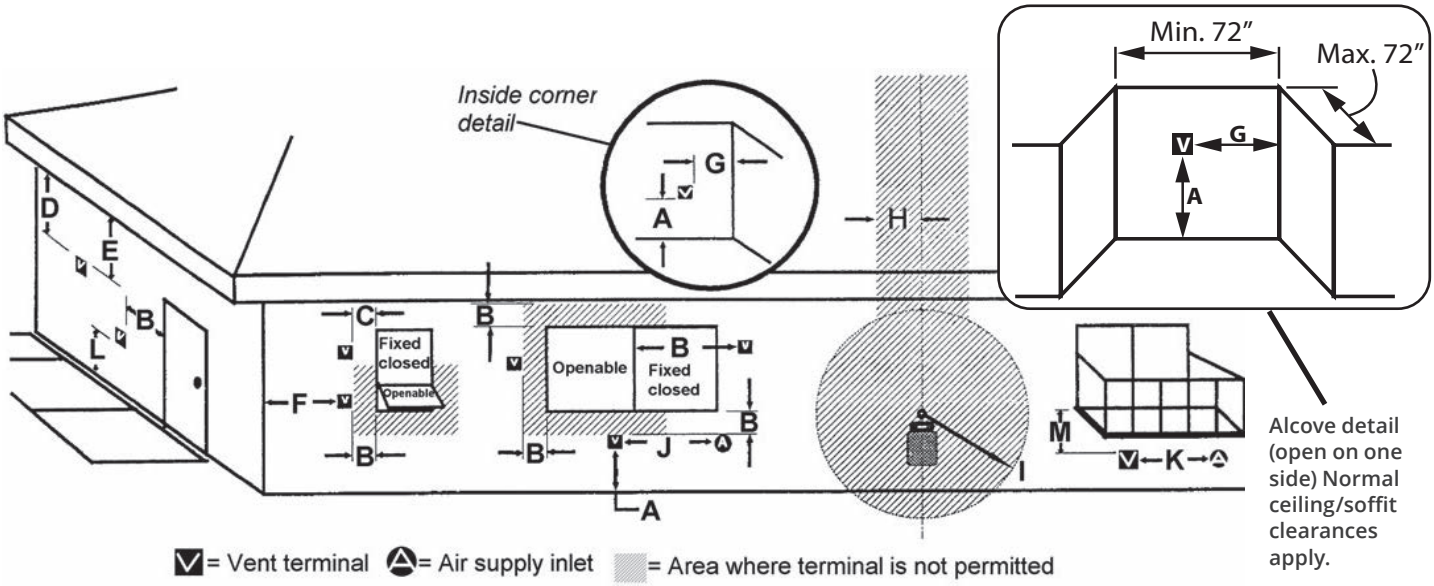

KEY	VENT TERMINAL LOCATIONS - MINIMUM DISTANCES	MINIMUM CLEARANCE	
		Inches	Cm
A	Clearance above grade, verandah, porch, deck or balcony	12	30
B	Clearance to window or door that may be opened	12	30
C	Clearance to permanently closed window (recommended to prevent condensation on window)	12	30
D	Vertical clearance to ventilated soffit located above the terminal within a horizontal distance of 2 feet (60 cm) from the center-line of the terminal	18	46
E	Clearance to unventilated soffit	12	30
F	Clearance to outside corner (measured from the center of vent)	12	30
G	Clearance to inside corner (measured from the center of vent)	12	30
H	Horizontal clearance to center-line of meter/regulator assembly located within 15 feet (4.6 m) below the terminal	36	90
I	Clearance to service regulator vent outlet	36	90
J	Clearance to non-mechanical air supply inlet to the building or the combustion air inlet to any other appliance	12	30
K	Clearance to a mechanical air supply inlet	72	180
L	Clearance above paved sidewalk or a paved driveway located on public property ***Note:*** *A vent must not terminate directly above a sidewalk or paved driveway, which is located between two single-family dwellings and serves both dwellings.* ***THIS DOES NOT APPLY to direct vent, non-consdensing appliances in the Province of Ontario.***	84	210
M	Clearance under a verandah, porch, deck or balcony *Only permitted if veranda, porch, deck or balcony is fully open on a minimum of 2 sides beneath the floor*	12	30

Note: Local codes and regulations may require different clearances.

Co-Axial Vertical Installations

- Check the roof pitch to determine which roof flashing will be needed. See *Approved Venting Components* pages 8–9 for allowable components.
- The distance from the roof to the lowest terminal discharge opening ("H" in figure) depends on the roof pitch and must be in accordance with the manufacturer's instructions supplied with the termination unit. *Note: The venting system for these appliances is considered to be* ***Special Venting System****. The rule in the CAN/CGA-B149 Installation Code requiring a minimum vent height of 2 feet above any portion of a building within 10 feet does not, therefore, apply.*
- The minimum clearances to combustible materials all round the vent pipes must be in accordance with the dimensions shown in *Venting Configurations—With Vertical Rise* page 22 of this manual.
- Drop a plumb from the ceiling to the center of the appliance vent opening. Mark the position on the ceiling. Drill a small hole at the marked position.
- Determine the position where the vent will pass through the roof. If directly above the position where it penetrates the ceiling, drop a plumb from the roof to the small hole in the ceiling and mark the roof at this spot.
  If rafters or other obstructions will prevent a vertical exit or if clear attic space is desired, the roof outlet can be offset using 45 degrees elbows. Drill a small hole at the marked position.
- A ceiling firestop must be installed at the second floor and higher floors.
  A ceiling support should be used below the flat ceiling. To install the firestop and support, cut and frame a 10 inches (254 mm) square hole centered on the small hole previously drilled.
- Fit vent accessory elbows a pipe lengths as required up through ceiling support boxes and firestops.
  If installation includes offset, support the offsetting pipes every 3 feet (1 m) with wall straps as shown.
- Cut a hole in the roof centered on the small hole. The hole must allow for the minimum clearances to combustible materials. See Venting section in this manual.
- Fit pipe lengths through the roof. Fit roof flashing securing it with roofing nails.
- Fit storm collar and termination cap.
- **FS installations.** Secure the appliance to the floor or wall if necessary.

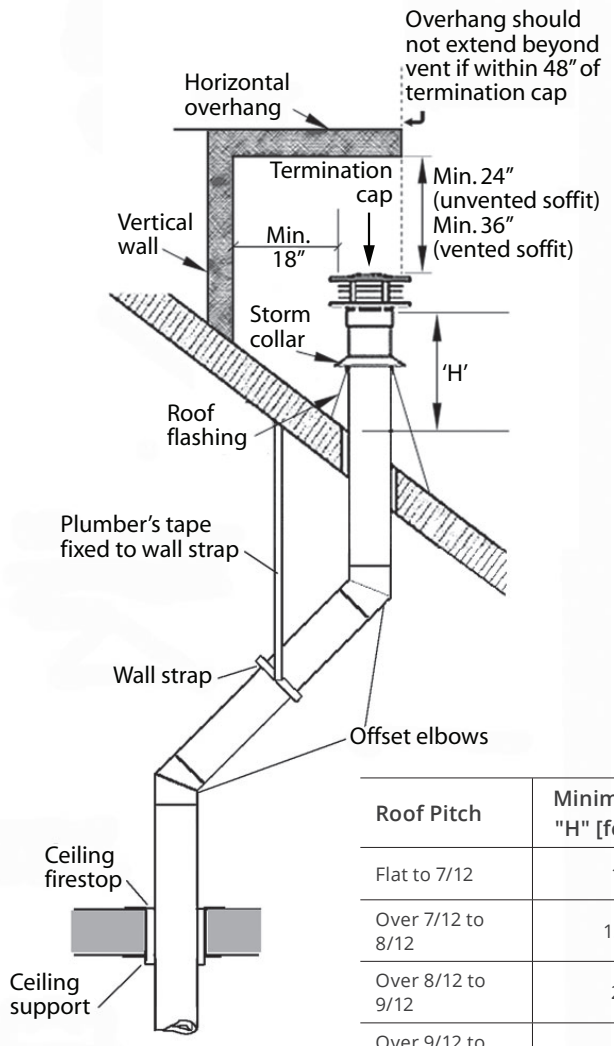

Roof Pitch	Minimum "H" [feet]
Flat to 7/12	1'
Over 7/12 to 8/12	1.5'
Over 8/12 to 9/12	2'
Over 9/12 to 10/12	2.5'
Over 10/12 to 11/12	3.25'
Over 11/12 to 12/12	4'
Over 12/12 to 14/12	5'

Through-the-roof installation

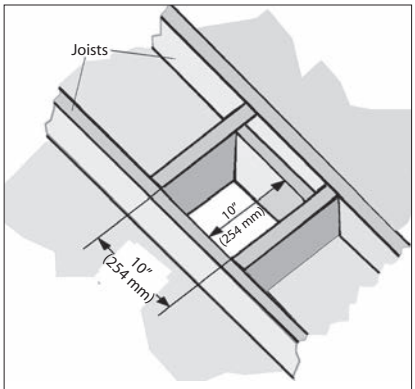

Firestop hole

Applications

This appliance can be converted to install as a co-linear application or as a co-axial using flex pipes application. The co-linear or co-axial flex portion of the vent system may only be installed within a solid-fuel burning appliance.

This appliance must not be connected to a chimney flue serving a separate solid-fuel burning appliance.

Types of Installations

- Complete installation into an existing fireplace
- Partial installation into an existing fireplace
- Installation into an adjacent chimney
- Installation in chimney using co-axial flex venting

See the following pages for each installation details.

Rules for Co-Linear Venting

- Maximum 40 feet vertical pipe
- Minimum 10 feet vertical
- Maximum offset 8 feet with liners at minimum 45 degrees from horizontal plane
- Restrictor: See *Venting Chart* page 21 and *Restrictor* page 23 to confirm and set the position.

NOTE

Co-linear or co-axial flexible aluminum venting liners should be professionally inspected periodically for corrosion and damage and replaced when necessary. If the installation does not allow for future inspection or replacement of the flexible aluminum liners, then stainless steel vent liners are recommended.

Existing Fireplace Preparation

A few points must be considered before inserting the P2 into an existing fireplace cavity. Generally, no modifications are allowed to the existing fireplace that will compromise the integrity of the existing fireplace.

Cutting away any sheet metal parts of the existing fireplace to accommodate the installation of the P2 is prohibited. Check with local authorities if in doubt.

Components that are bolted or screwed on such as dampers or baffles may be removed to accommodate the installation of the P2 engine. Refractory bricks, glass doors, screen rails, screen mesh, and log grates can be also removed.

Clean Fireplace and Chimney

Have the chimney swept and the fireplace cavity including ash dumps and clean-outs cleaned before installing the P2 heater and vent liners. Any creosote or soot residue remaining in the fireplace cavity chimney or clean-out may cause odors or stains once the P2 insert is installed. Consult with chimney sweep for information on how best to clean.

Existing Dampers

Factory-built, zero-clearance fireplaces will require the damper to be removed in order to install the vent liners. These dampers are usually bolted into place. Dampers in masonry fireplaces must be fixed open and may remain in place.

Ash Retaining Curbs

Some fireplaces (particularly factory-built) have a raised curb at the front edge to retain ashes. Check the dimensions carefully to ensure the P2 engine will fit behind any raised curb (some curbs may be removed separately from the refractory base).

Gas Line Routing

Plan the routing of the gas line before proceeding. Utilize the existing hole for the gas line of the factory-built fireplace.

If the fireplace has no access hole, carefully drill an access hole of 1.5 inch (37.5 mm) or less through the lower sides or bottom of the firebox in a proper workmanship manner. This access hole must be plugged with non-combustible insulation after the gas supply line has been installed.

See *Dimensions* section for detailed location of gas inlet. Also, take into consideration whether or not a fan or shut-off valve will interfere when planning routing of the gas line.

Combustible Mantels

Combustible mantel clearances must conform to those required for the original solid-fuel fireplace into which the P2 is being installed.

Attach Warning Conversion Plate to Existing Fireplace

(Label supplied with vent adapter)

Attach the “This fireplace has been converted...” label **to the existing fireplace** using screws or other mechanical means and store any removed parts in back of the existing fireplace for future use.

Complete Installation Into an Existing Fireplace

The appliance can be installed completely inserted into the masonry cavity as illustrated. In this case, the firebox zero clearance standoffs supplied with the heater are not required.

Required venting components:

- Valor Co-axial to co-linear adapter 1156CLA;
- 2 lengths of 2-ply, flexible chimney liner approved for venting gas appliances:
  - 1 x 3-inch diameter for air inlet and
  - 1 x 3-inch diameter for exhaust;
- Co-linear termination kit 3 x 3 and flashing or co-linear to co-axial adapter and either high wind vertical vent terminal cap or a low profile vertical termination.

NOTES

- Dimensions shown with standoffs removed. Only for applications where the unit is fully recessed into an existing solid-fuel burning fireplace.
- One corner flange of the 1156CLA Co-Linear Adapter extends over the edge of the appliance's outer case, once installed. You can cut away or bend down this flange.
- The 235SBPB1 Backing Plate for reduced depth can be used for shallower cavities with a minimum depth of 12" (305 mm), however, only for applications where the unit is fully recessed into an existing solid-fuel burning fireplace.

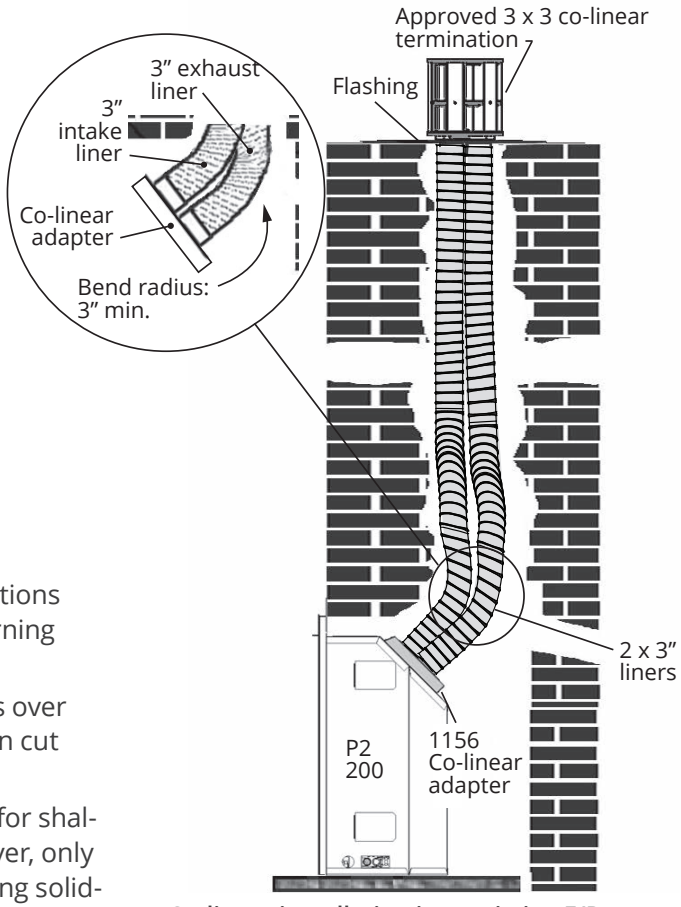

Co-linear installation into existing F/P

Dimensions with Flat Backing Plates 235BPBs

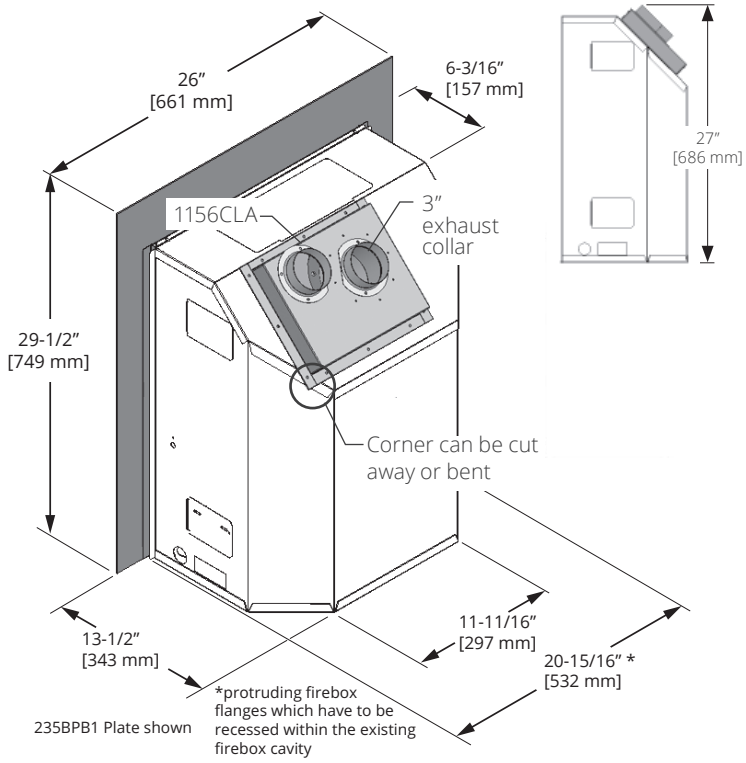

Dimensions with Reduced-depth Backing Plate 235SBPB1

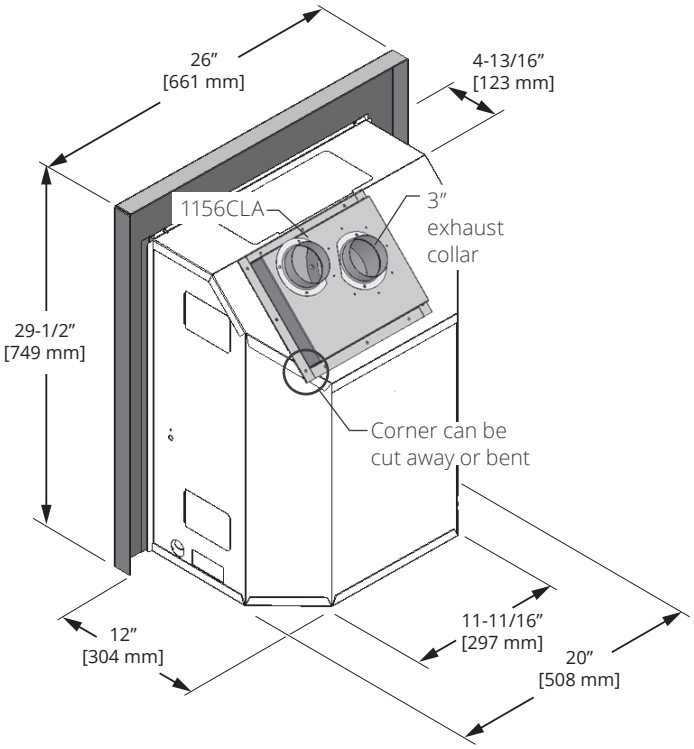

Installing Into Existing Fireplace with 720SWK

The appliance can be installed completely inserted into the masonry cavity as illustrated below.

In this case, the firebox zero clearance standoffs supplied with the heater are not required.

Required venting components:

- Valor 1156CLA Flex Co-Linear Adapter Kit;
- Two lengths of 2-ply, 3" diameter flexible chimney liners approved for venting gas appliances;
- Valor 720SWK Sidewall Co-linear Termination kit;
- Terminal Guard such as Valor 658TG or 845TG if terminal located at less than 7'-0" of grade.

Clearances

See *Horizontal Vent Termination Location* page 24.

NOTE

See 1156CLA and 720SWK installation manuals for complete instructions.

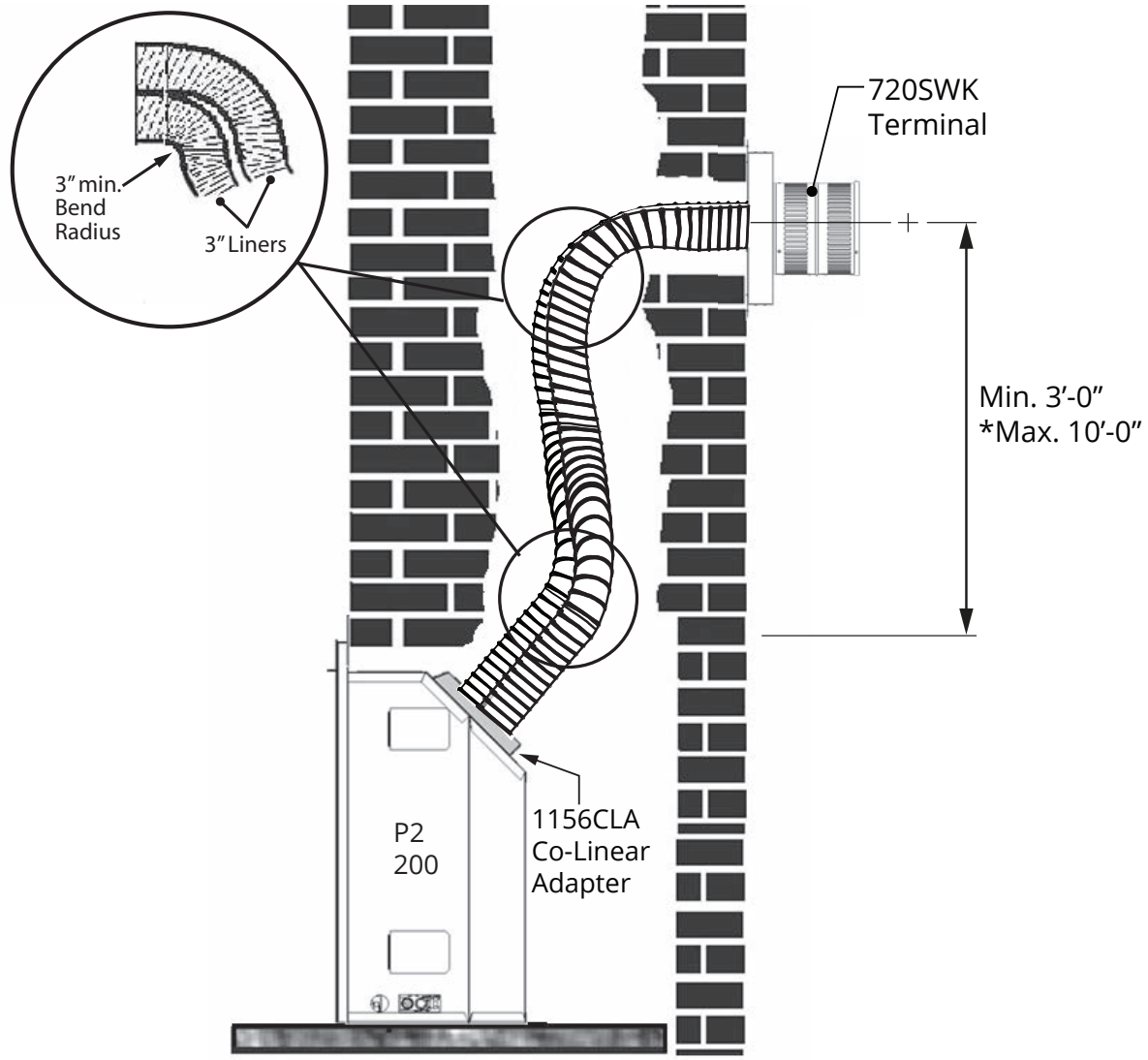

*Beyond 10'-0", the sidewall terminal may be used but may require restrictors.

Partial Installation Into an Existing Fireplace

The appliance can be partially inserted into the masonry cavity as illustrated below.

In this case, **the appliance must be completely framed and maintain clearances to combustibles as shown in this manual.**

Required venting components:

- Co-axial to co-linear adapter at appliance Valor 1156CLA, 46DVA-GCL33 or equivalent;
- 2 lengths of 2-ply, flexible chimney liner approved for venting gas appliances:
  - 1 x 3-inch diameter for air inlet and
  - 1 x 3-inch diameter for exhaust;
- Co-linear termination kit 3 x 3 and flashing or co-linear to co-axial adapter and either high wind vertical vent terminal cap or a low profile vertical termination.

NOTE

Standoffs are required to maintain clearances to combustible for the part of the appliance outside a non-combustible cavity.

NOTE

This appliance must be completely framed and maintain clearances to combustibles as shown in this manual.

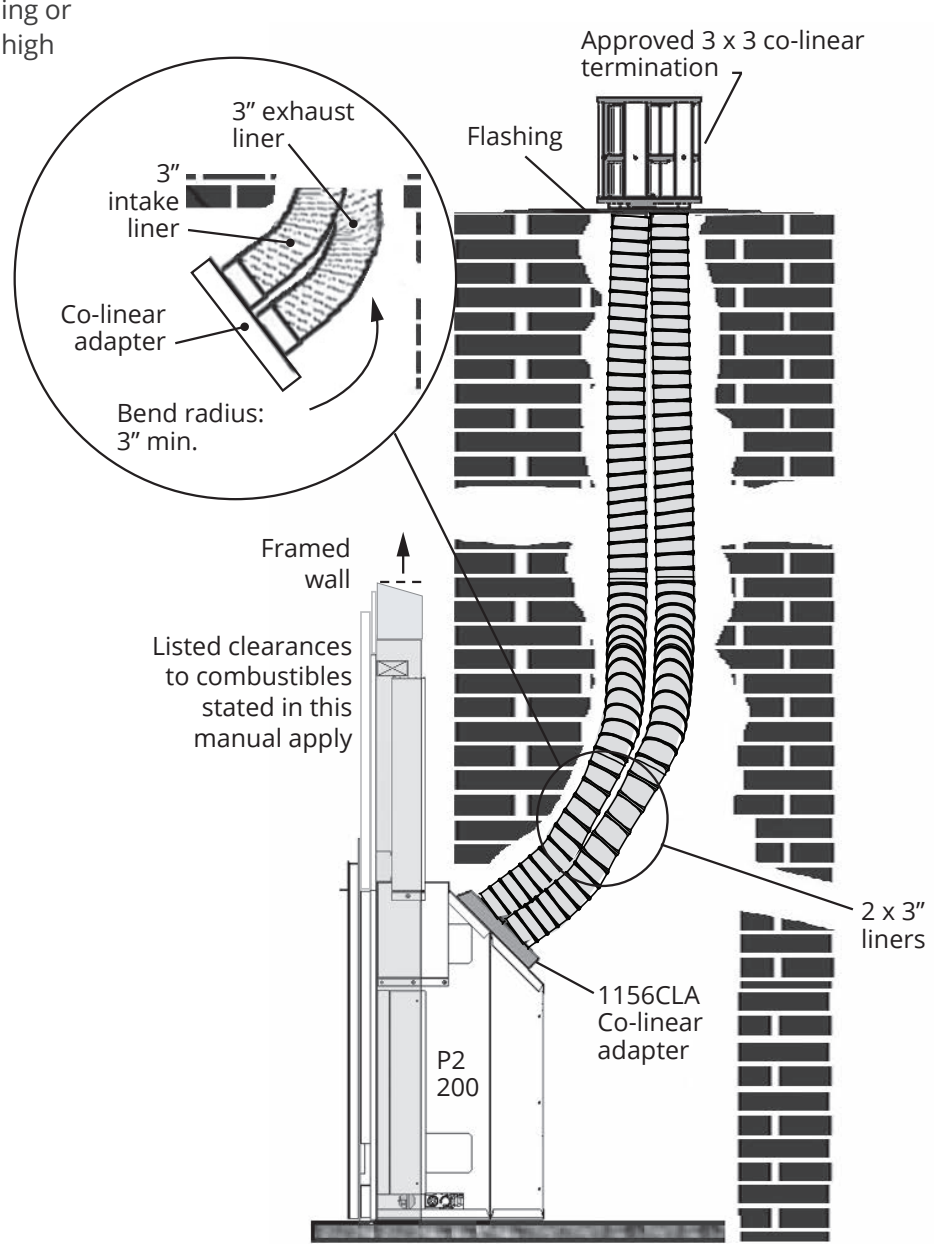

Co-linear installation on appliance partially into existing fireplace

Installation Into an Adjacent Chimney

The appliance's venting system can be partially inserted into the adjacent masonry chimney as illustrated below.

In this case, **the appliance must be completely framed and maintain clearances to combustibles as shown in this manual.**

Required venting components:

- Co-axial to co-linear adapter at appliance 46DVA-33CLAA, 46DVA-GCL33 or equivalent;
- 2 lengths of 2-ply, flexible chimney liner approved for venting gas appliances:
  - 1 x 3-inch diameter for air inlet and
  - 1 x 3-inch diameter for exhaust;
- Co-linear termination kit 3 x 3 and flashing or co-linear to co-axial adapter and either high wind vertical vent terminal cap or a low profile vertical termination.

NOTE

Standoffs are required to maintain clearances to combustible for the part of the appliance outside a non-combustible cavity.

NOTE

This appliance must be completely framed and maintain clearances to combustibles as shown in this manual.

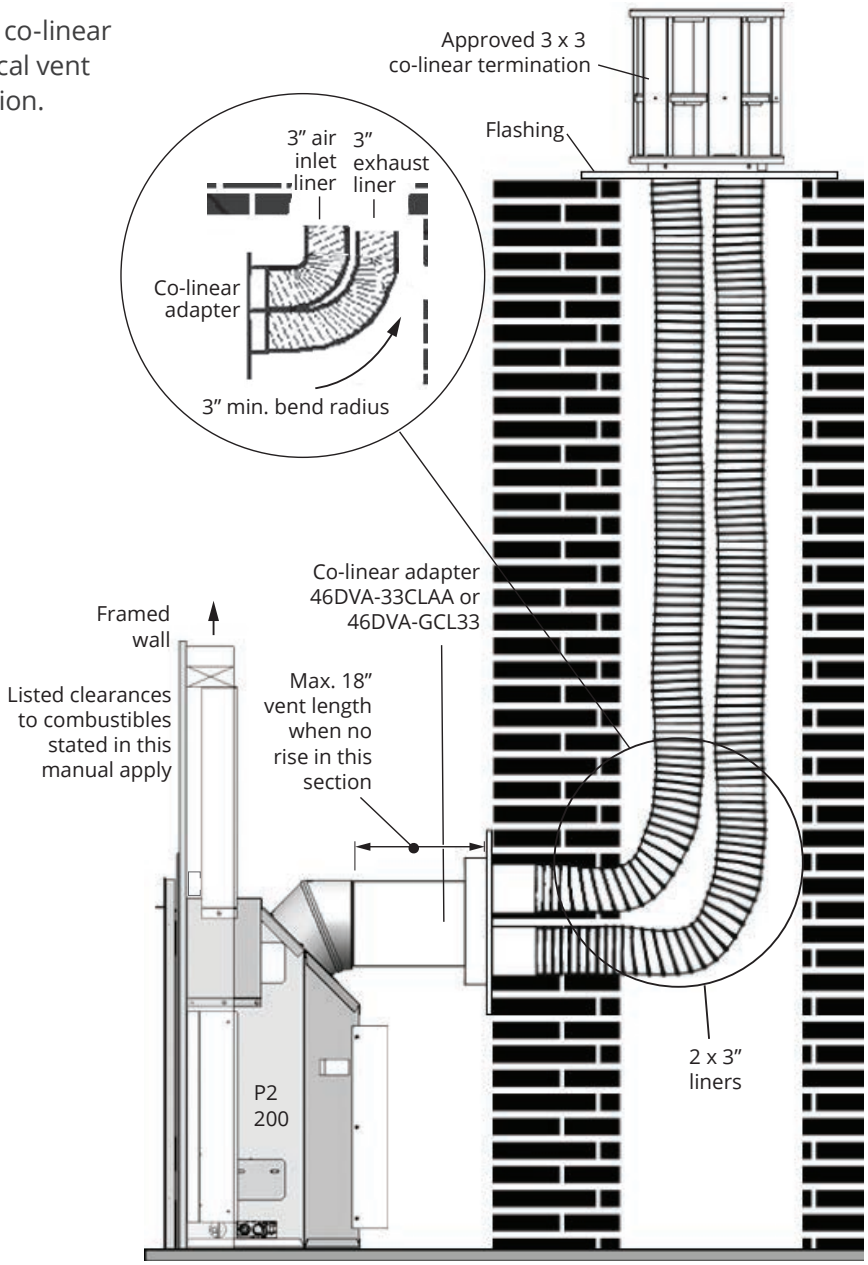

Co-linear installation into adjacent existing chimney

Typical Co-linear Venting Components

Co-axial to Co-linear Appliance Adapters

46DVA-GCL33

46DVA-33CLAA

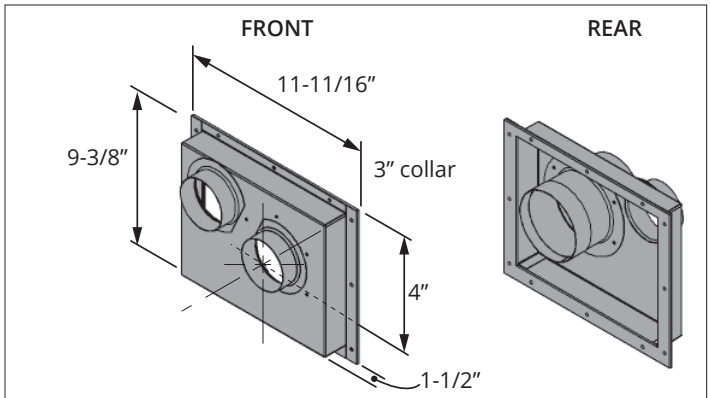

1156CLA—Co-Linear Vent Adapter

Co-linear Terminal Configurations

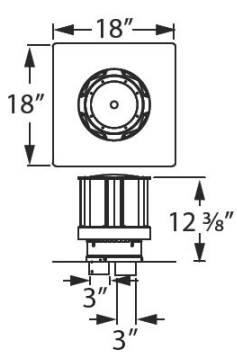

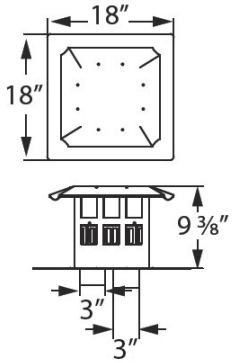

Co-linear Kits

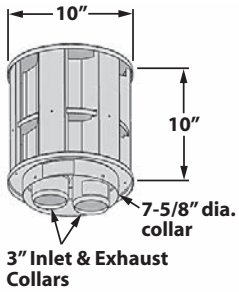

Co-Linear Terminal (typical)

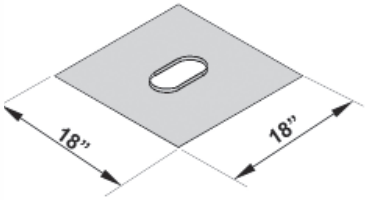

Flashing Kit

720SWK—Sidewall terminal—with 1156CLA ONLY

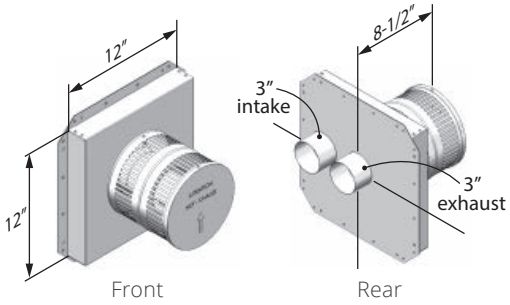

Alternate Co-linear to Co-axial Conversion at Terminal

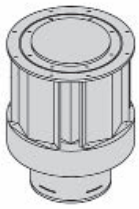

Co-axial Terminal Cap

With...

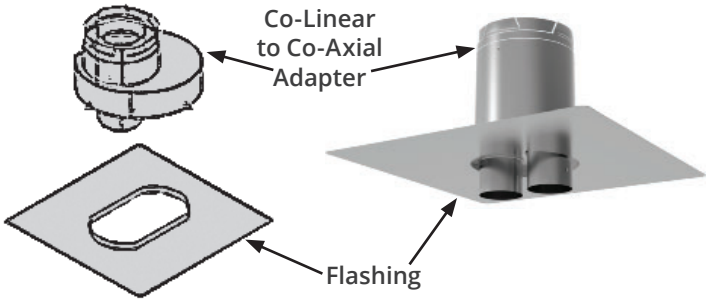

Complete Installation Into an Existing Fireplace with 200CFA

The appliance can be installed completely inserted into an existing masonry fireplace as illustrated.

In this case, the firebox zero clearance standoffs supplied with the heater are not required.

Required venting components:

- Valor 200CFA—Co-axial appliance adapter 4 x 6-5/8 to 3 x 5;
- Valor—590FVK2 Flex Vent Kit;
- High wind vertical co-axial vent terminal cap or low profile co-axial vertical termination.

NOTE

See 200CFA and 590FVK2 installation manuals for complete instructions.

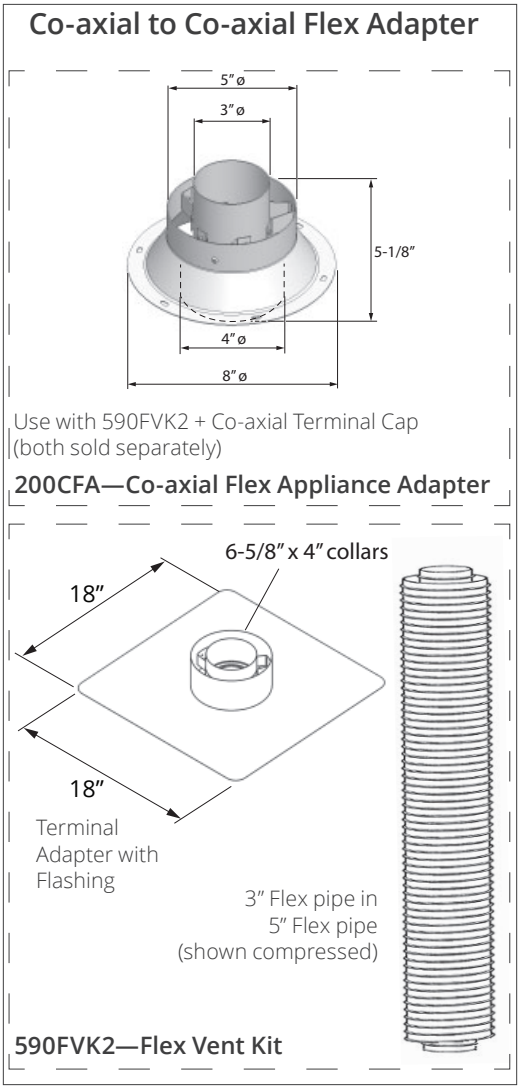

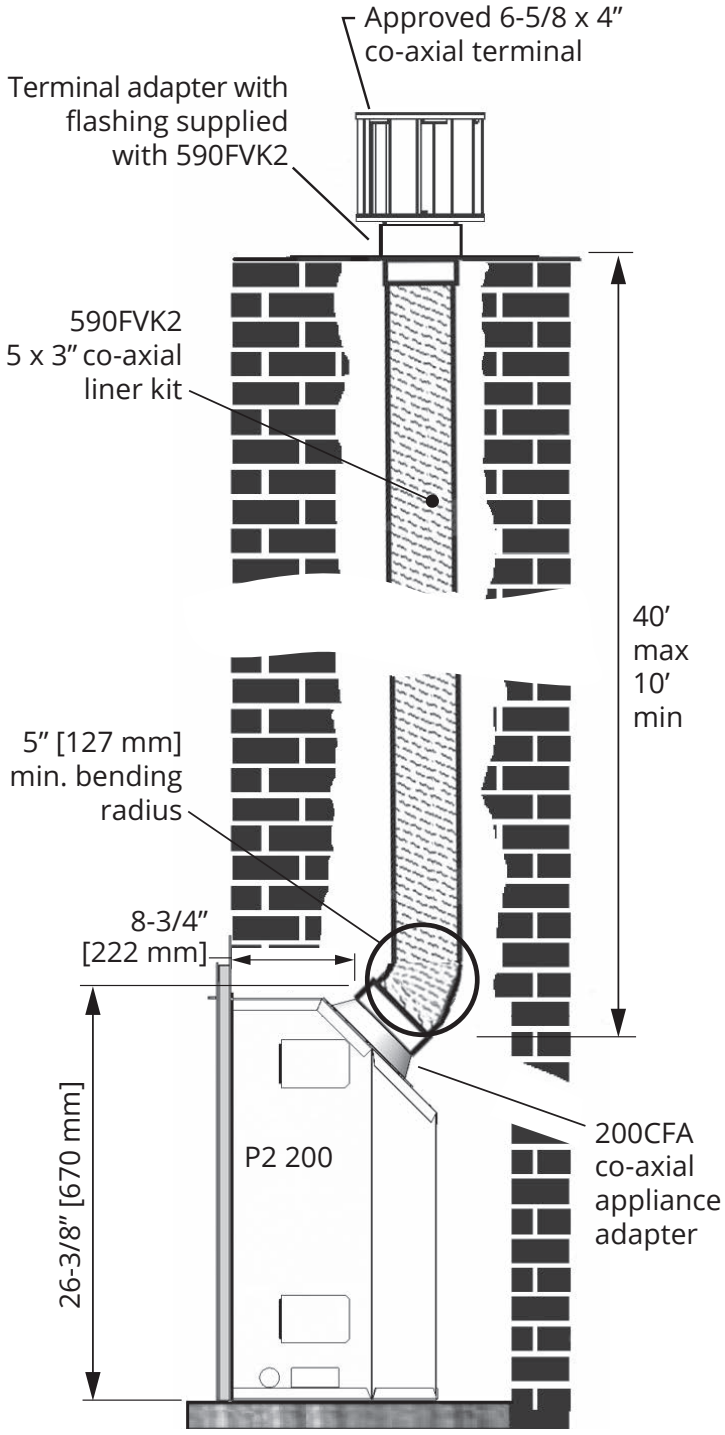

Partial Installation Into an Existing Chimney or Into an Adjacent Chimney with 590CFA

The appliance's venting system can be partially inserted into the adjacent masonry chimney as illustrated below.

In this case, **the appliance must be completely framed and maintain clearances to combustibles as shown in this manual.**

Required venting components:

- Valor 590CFA—Co-axial vent adapter 4 x 6-5/8 to 3 x 5;
- Valor 590FVK2—Flex Vent Kit;
- High wind vertical co-axial vent terminal cap or low profile co-axial vertical termination.

NOTE

This appliance must be completely framed and maintain clearances to combustibles as shown in this manual.

NOTE

See 590CFA and 590FVK2 installation manuals for complete instructions.

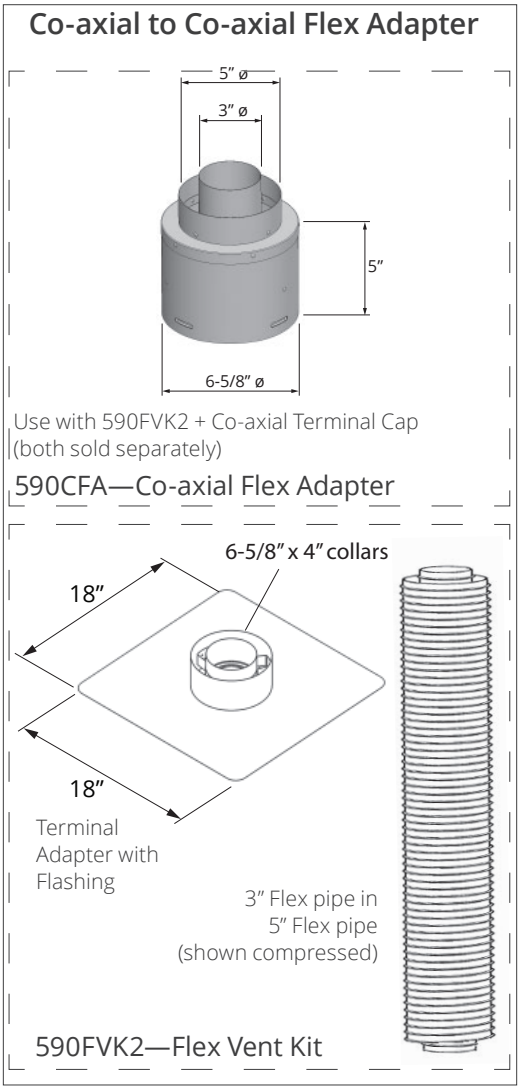

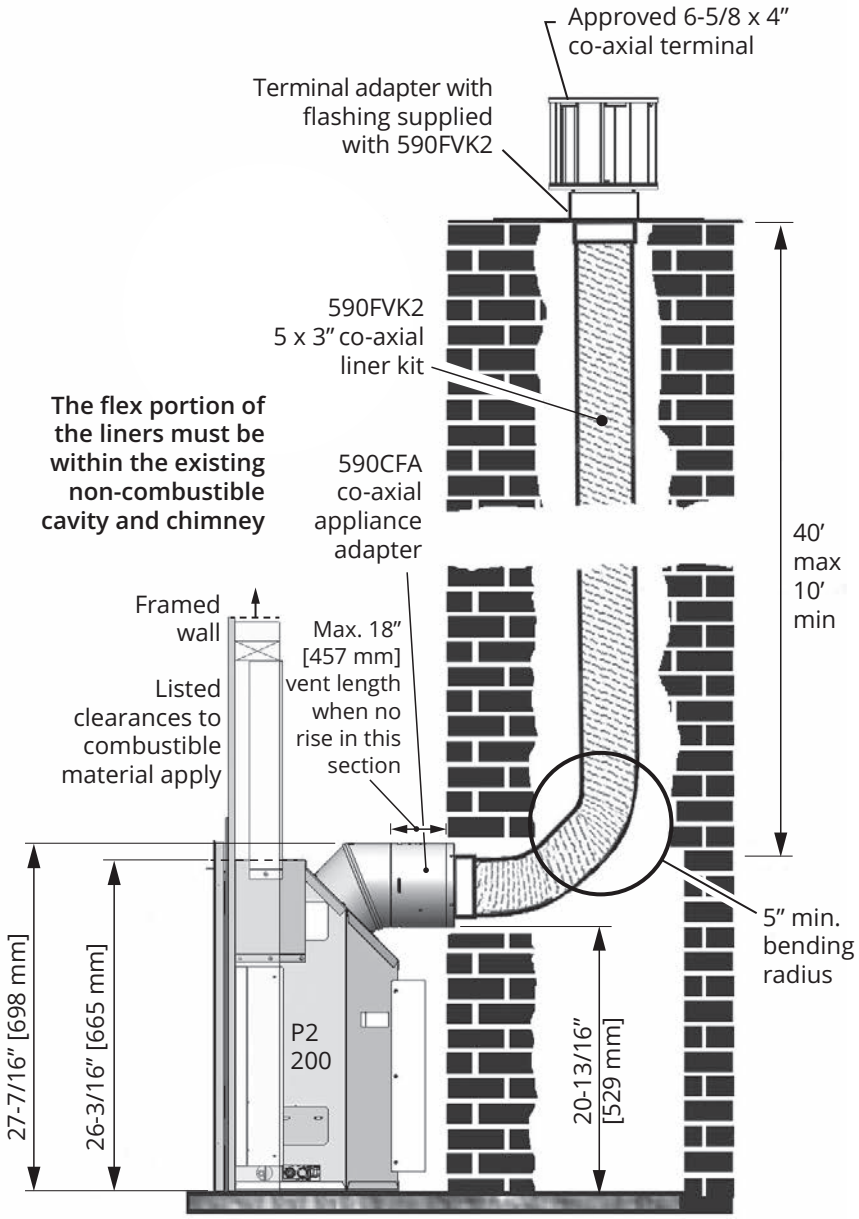

Unpack Appliance

Caution

Beware of sharp edges! Wear gloves!

1. Remove cardboard wrapping from appliance ensuring all items packed in the cardboard sleeves are removed. Recycle the packaging.
2. **Verify that you have all the components required for the installation, including:**
   - approved non-combustible wall board;
   - liners and fuel bed (packed separately);
   - front/backing plate, barrier screen;
   - venting components;
   - HeatShift System components, if used;
   - electrical components, if fan or wifi are used.

Top Standoffs Installation

The top standoffs are supplied loose with the fireplace and need to be installed on the appliance.

Depending of the front used, the standoffs can be installed in two position. They are secured on each side of the appliance with one screw on top of the radiant shields and one screw on their side as shown below.

263RCB Richmond Cast Front: If you are installing the 263RCB, secure the standoff on the **rear** hole on top and on the side of the radiant shields.

Other fronts: Secure the standoffs on the front hole on top and on the side of the radiant shields.

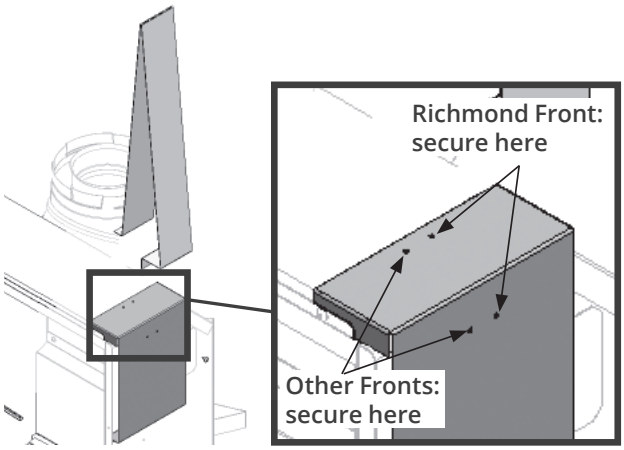

Standoffs, Radiant Shields, *Micore* Panel

The appliance is supplied with multiple standoffs to keep clearances to combustible as well as a top *Micore* panel. For some applications, these components may not be necessary and can be removed.

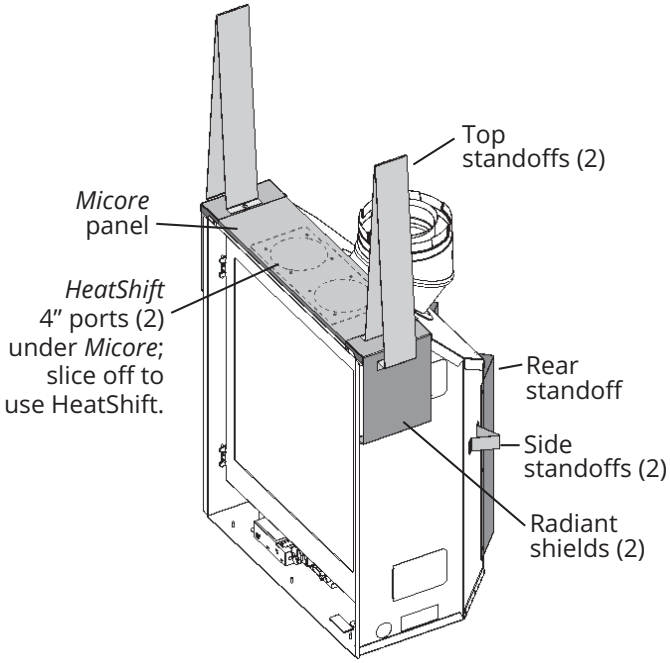

Zero-Clearance Installations

All standoffs are required. *Micore* panel is not required **when installing with HeatShift**. Remove or cut off the *Micore* panel to access the HeatShift ports.

Insert Installations in Non-Combustible Existing Solid-Fuel Burning Chimney and Fireplace

Standoffs and *Micore* panel are not required **as long as the appliance is inserted completely** into the non-combustible cavity. See *Vent Conversion* pages 26–33 for all the details.

Convert Vent Take-Off (if required)

This unit is supplied with a top facing vent take-off which can be field-converted to a rear vent take-off.

1. Remove top facing take-off (6 screws).

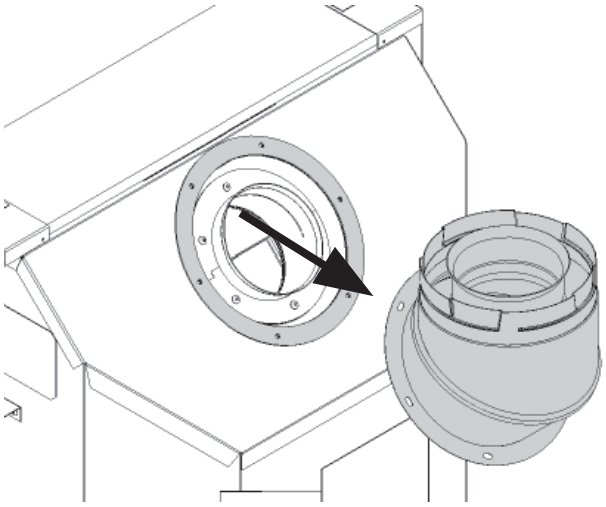

2. Swivel collar and install as a rear facing one (6 screws).

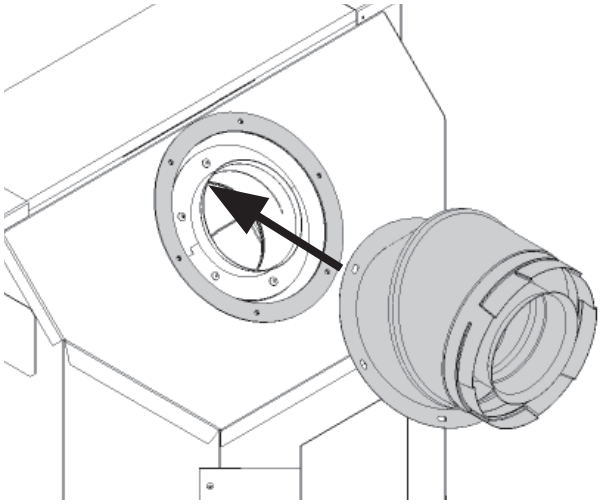

NOTE

If converting the appliance to use 1156CLA, 200CFA or 590CFA adapters, see the Installation Instructions included with the adapter.

Remove Window

The window is held in place by 4 spring-loaded latches, 2 on each side of the firebox. A handle is necessary to unhook the latches.

1. Locate the handle on the bottom front of the fireplace. It is held in place by *Velcro*. Pull it out.

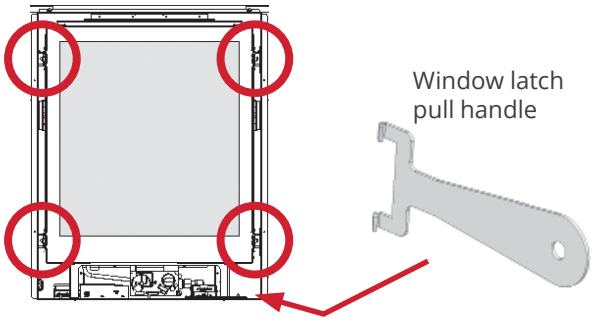

2. Locate the four latches around the window frame.
3. Starting with the bottom latches, hook the pull handle to the latches' vertical tabs and firmly pull forward and outward to unhook.

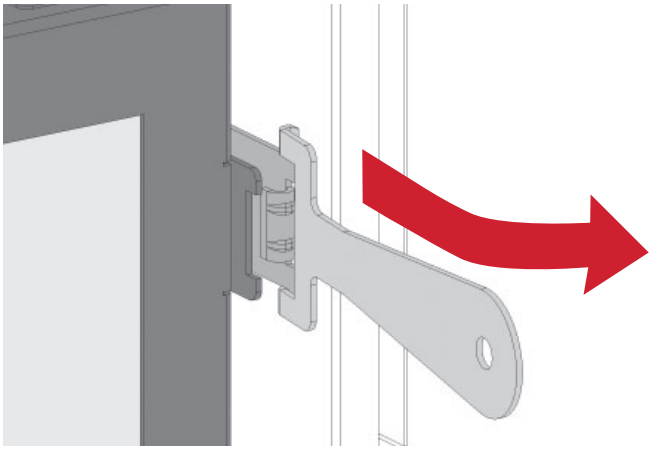

4. Repeat with the top latches while holding the top of the window frame.
5. Carefully pull the window straight out to disengage it from its side brackets.
6. Set it aside in a safe place to avoid damage.
7. Reattach the handle to its *Velcro* at the bottom of the fireplace so it is easy to find later.

Reinstall and Check Window

Reinstall the window using the latch pull handle located on the bottom front of the fireplace.

1. Rotate the four side spring latches to a vertical position. Holding the window at the top and bottom, place the top edge on top of the firebox.
   Lift the window slightly so the side tabs slide back over the corresponding roller bushings at the firebox sides. Hold the window back and flat against the firebox.

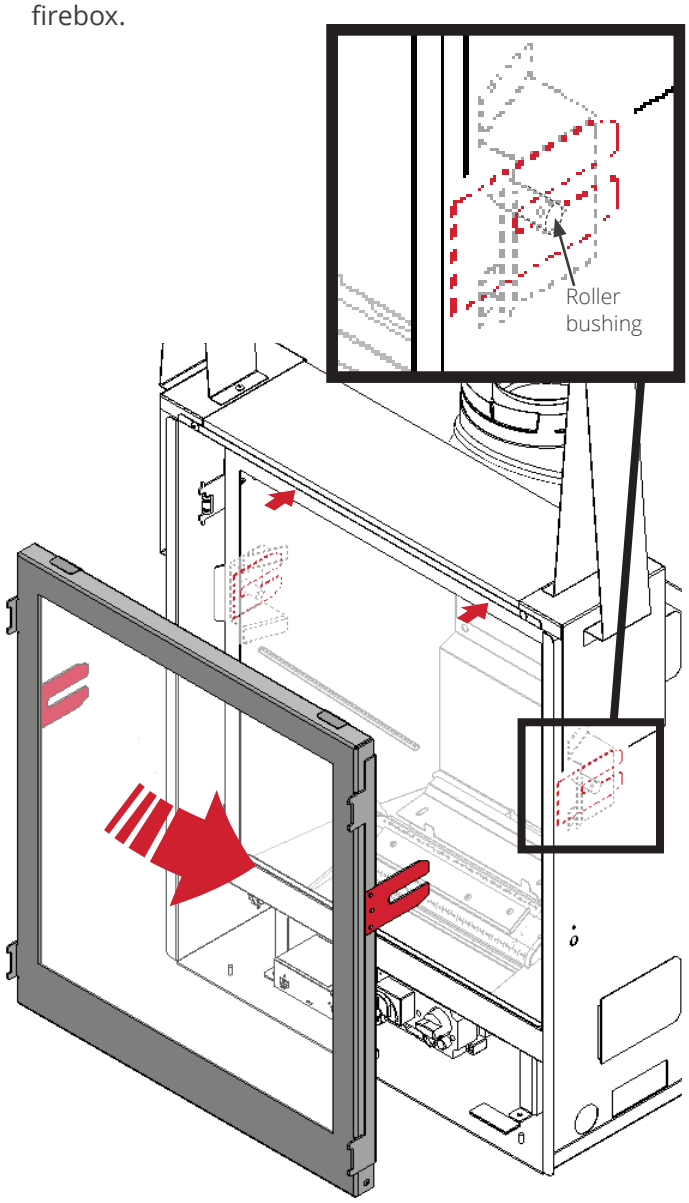

2. Using the latch pull handle, hook the four spring latches over the corresponding tabs as shown.

⚠ WARNING

The window must be correctly installed, fastened and sealed after servicing or serious bodily injury and/or damage to the appliance may result.

To ensure a safe operation:

- **Double-check that the window is correctly installed;**
- **Verify that the four spring-loaded latches are hooked properly to the four window tabs then;**
- **Pull out the top of the window, then the bottom and release to ensure the springs return it;**
- **Ensure the window is sealed by pressing firmly around it before operation.**

⚠ WARNING

Failure to install the window correctly can:

- **Leak carbon monoxide.**
- **Affect the performance of the fireplace.**
- **Damage components.**
- **Cause overheating resulting in dangerous conditions.**

Damage caused by incorrect window installation is not covered by the Valor Warranty.

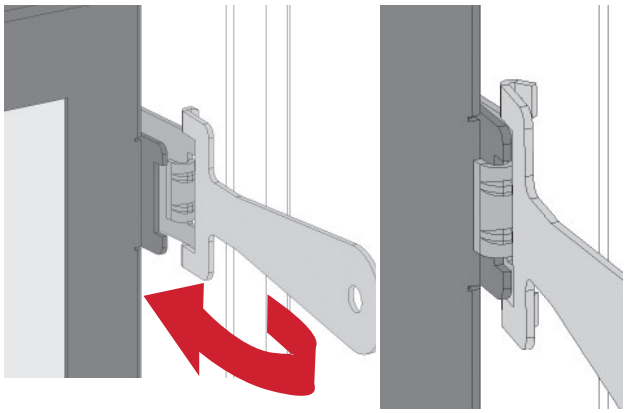

3. Pull and release the top and bottom of the window to ensure the springs return it.
4. Apply firm hand pressure around window frame to make sure it is sealed tight against firebox.
5. Reattach the latch handle by its *Velcro* to the bottom of the fireplace so it is easy to find when needed.
6. **If the Hot Glass Warning plate has been removed from the front lower corner of the window, re-install it by sliding it between the glass and the frame as indicated.**

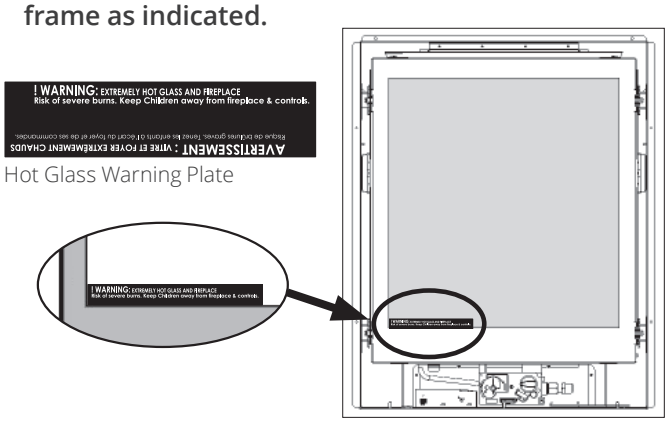

ONLY If You Are Installing HeatShift

Perform the following steps and see *Appendix C – HeatShift System®* pages 73–80 for more details regarding HeatShift planning and installation.

Install HeatShift Take-Off Collars

1. Cut-off the Micore panel near the radiant shield to access the HeatShift ports.
2. Remove the cover plate on top of the appliance (8 screws).

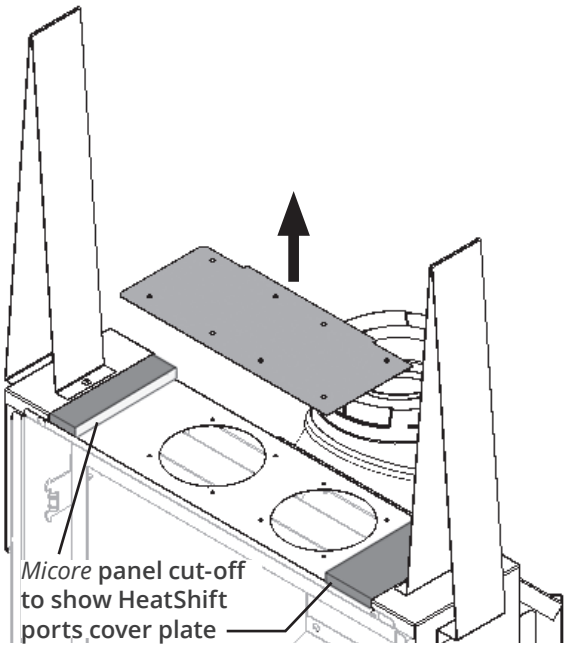

⚠ WARNING

BOTH (2) takeoffs MUST BE CONNECTED TO THE PLENUM.

3. Install the take-off collar plate supplied with the HeatShift plenum on the holes on top of the appliance's case (8 screws).

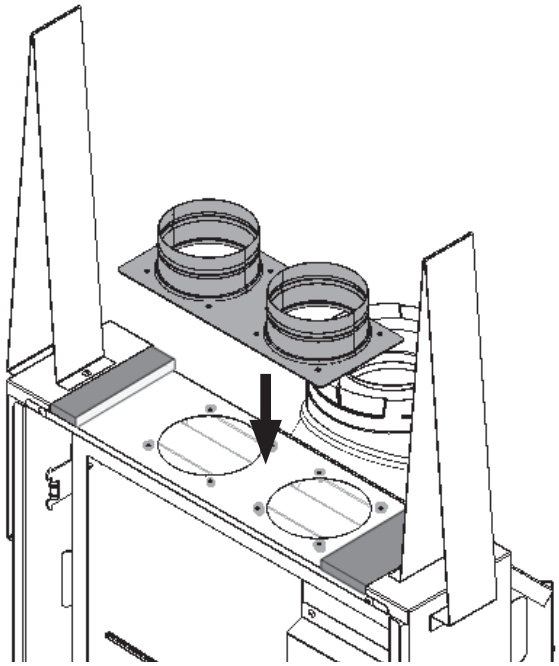

Install Electrical Wiring (if needed)

This section provides information to install the electric pre-wiring required for use with the optional 255CFK Circulating Fan Kit or GV60WIFI WiFi module.

We recommend connecting the electrical box even if the optional accessories have not been purchased. It is much easier to wire before the trim is installed and the wall finish is applied.

WARNING

All electrical installations must be performed by a qualified electrician and must be electrically wired and grounded in accordance with local codes or, in the absence of local codes, with the National Electrical Code, ANSI/NFPA 70 or the Canadian Electrical Code, CSA C22.1.

Electrical Requirements

255CFK—120 VAC, 60 Hz, less than 1 amp

GV60WIFI—6 VDC (from receiver, less than 1 amp)

General Requirements

Both optional 255CFK and GV60WIFI kits require a GV60VM power supply (known as a V-Module), which includes a three-prong grounded plug to plug into a grounded receptacle to be installed within the fireplace enclosure by a qualified electrician.

Notes

- Wiring within the receptacle enclosure must have a minimum 90°C temperature rating.
- Wire nuts not included.
- The 255CFK kit includes a junction box and receptacle as well as a V-module. See instructions packaged with the kit.
- The GV60WIFI kit includes a WiFi module only. It requires P2-WPK—WiFi Power Kit J-box and GV60VM—V-module (all sold separately) if the fan kit is not installed. See instructions packaged with the kit.

WARNING

NO ELECTRICAL CONNECTION ALLOWED for any outdoor installation!

Installation

Thread the power supply cable through the cable clamp (not provided) and through the hole in the lower left hand side of the fireplace casing. Do not tighten the clamp yet.

If simply roughing in power at this point, ensure wiring is not live or terminate at this location in a temporary metal junction box using wire nuts to cap wires.

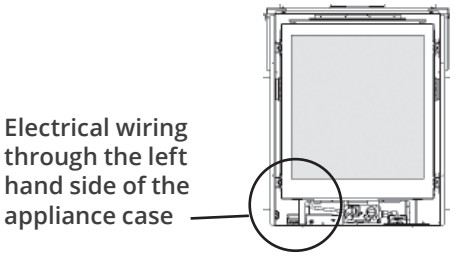

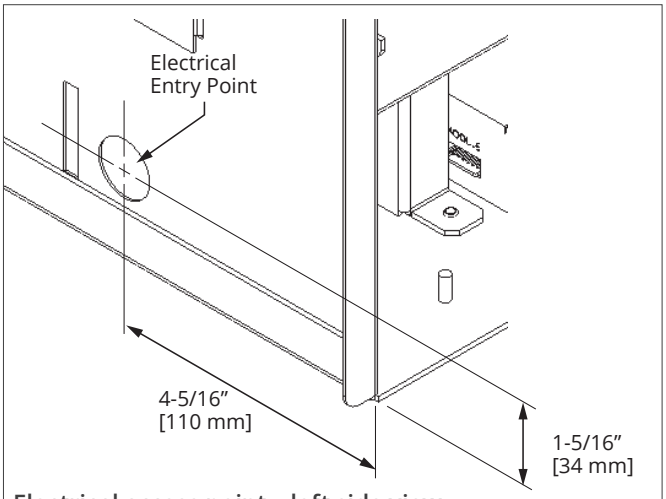

Electrical access point—left side view

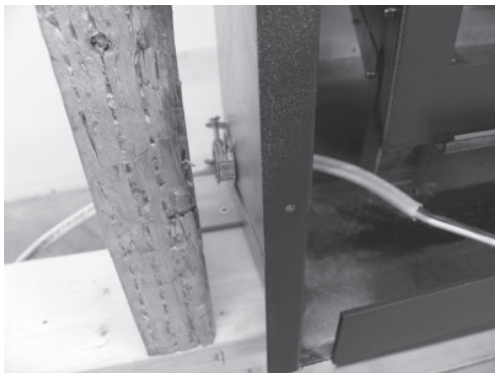

Install Appliance for 230CIK Clean Installation Kit

The 230CIK Clean Installation Kit installs at the time of framing the appliance. Wall finishes are then applied over top of flanges and butted up to 230's frame.

The side brackets provided loose with the appliance are not needed with this kit.

The 230CIK Clean Installation Kit is not compatible with any other trim kit.

No

Hearth considerations

You need to know whether there will be a hearth or not in front of the appliance and some rules must be considered:

Without hearth

In the case where there is no hearth, the wall finish can extend up to the flange at bottom of 230CIK. See illustration next page.

With hearth

Combustible hearths and flooring are allowed providing they are flush with, or below, the bottom of the appliance. If installing combustible flooring or hearth over top of the sub-floor, the appliance will have to be raised (shimmed up) accordingly.

Hearths raised above the bottom of the appliance (max. 1-1/2" thick) will need to be constructed of non-combustible material and use a thermal break such as *Micore* (not supplied) between the non-combustible finish and any combustible sub-floor below. See illustration next page.

⚠ WARNING

Raised, non-combustible hearths, although safe, can get quite hot and may present a burn hazard to children and other at-risk individuals.

Installation

With 230CIK—Clean Installation Kit

Right side view of appliance - bottom

Non-combustible finishes ABOVE appliance base level allowed to **maximum 1-1/2" [39 mm] thickness including 1/2" [13 mm]** insulating panel **(such as *Micore)*** as a thermal break over combustible flooring

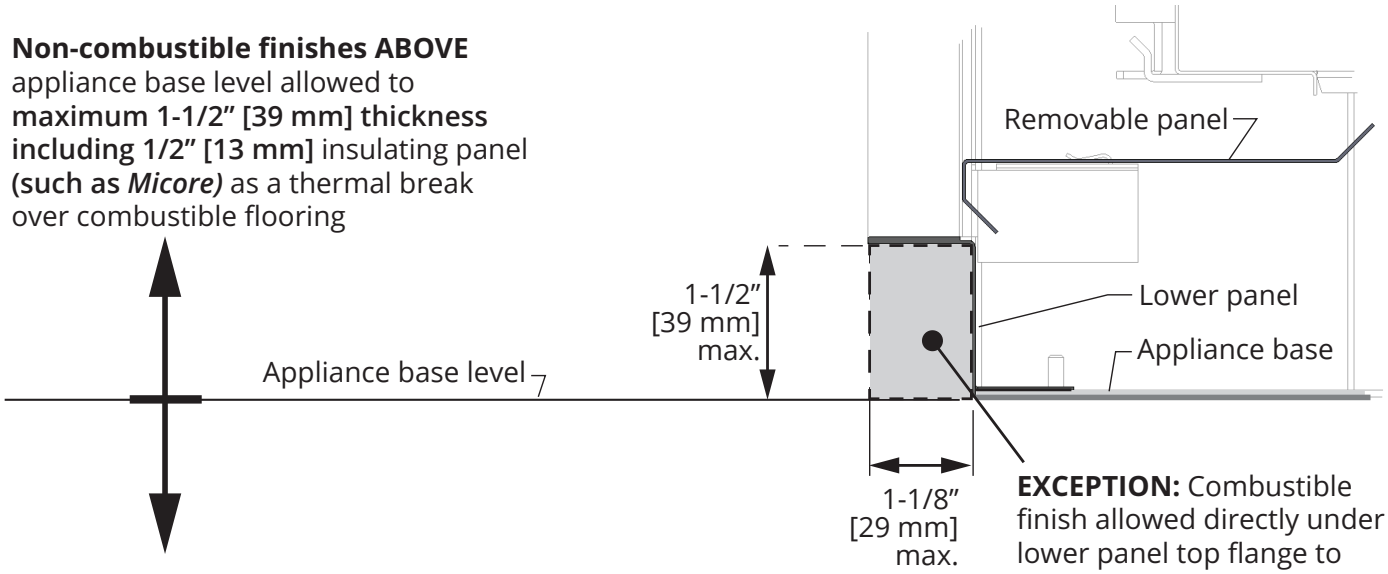

Combustible finishes AT and BELOW appliance base level allowed

EXCEPTION: Combustible finish allowed directly under lower panel top flange to **max. 1-1/2" high x 1-1/8" deep** (shaded area)

230CIK - Finishing without hearth

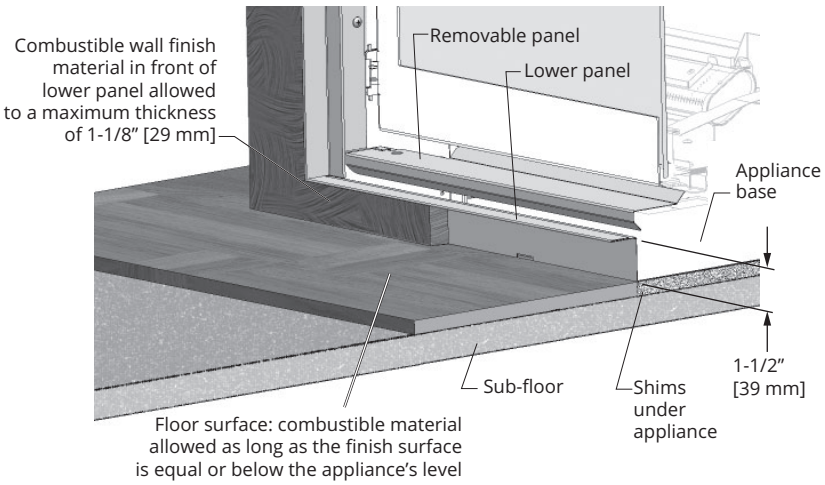

230CIK - Finishing with hearth

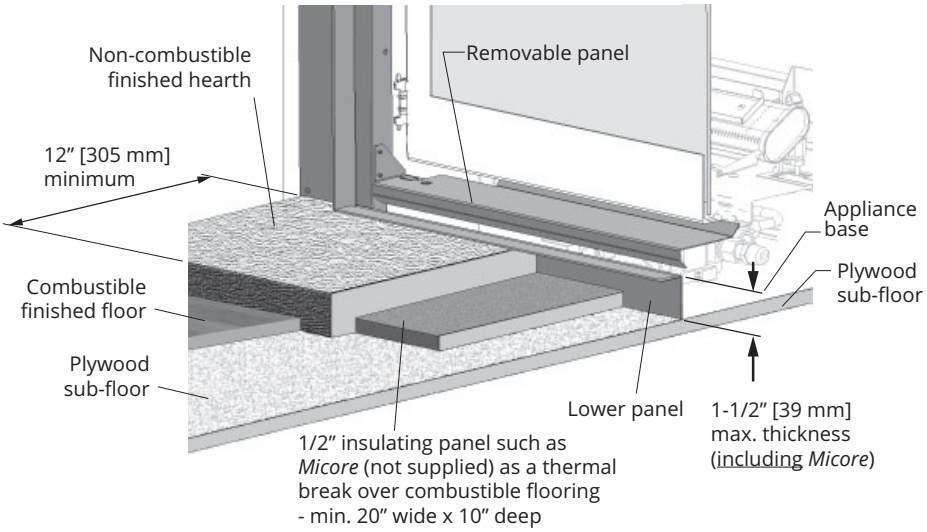

Install 230CIK to appliance

1. Unpack 230CIK ensuring you have all the pieces on hand.

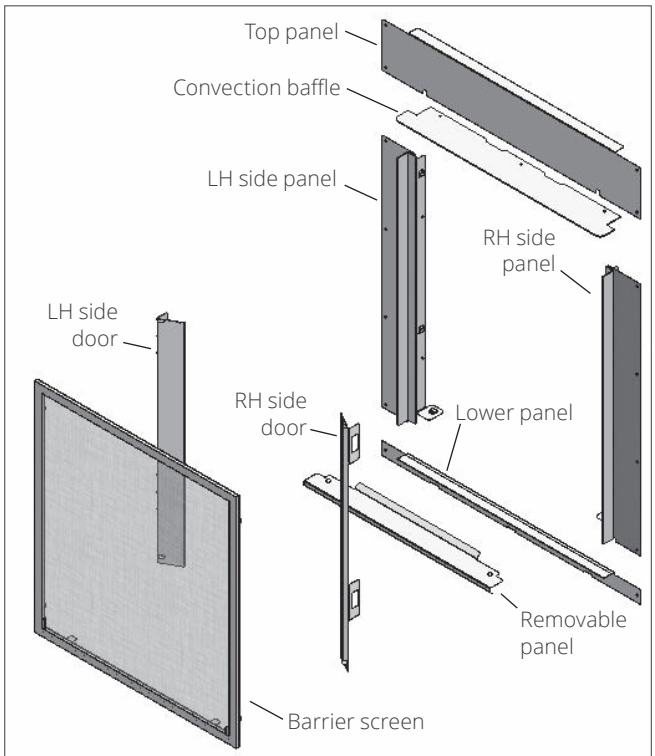

230CIK Kit Content

2. Install the lower panel securing it to the studs inside the bottom of the appliance with 3 nuts provided.

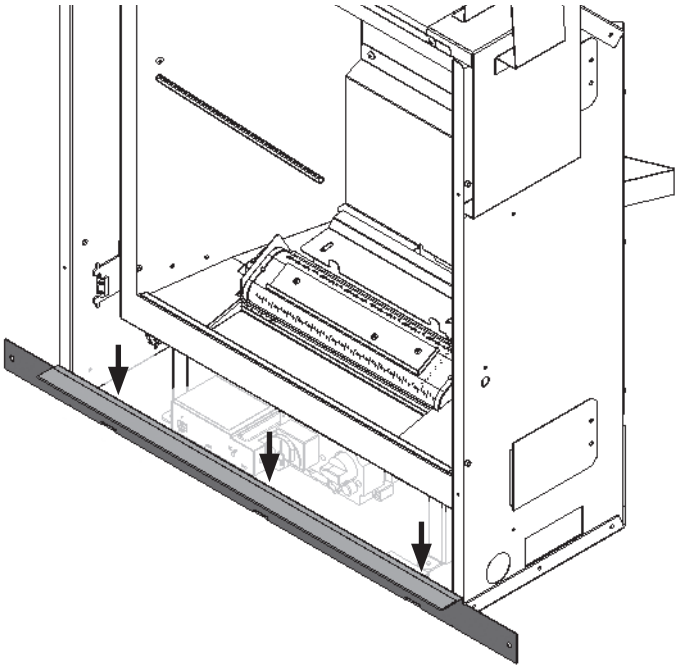

3. Install the side panels on the appliance securing them from inside with 4 low profile black screws provided (2/side).

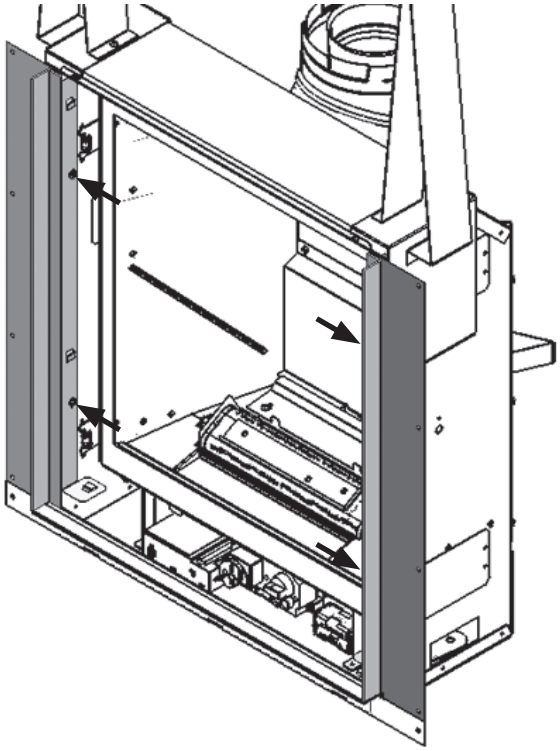

4. Slide the convection baffle under the top edge of the appliance's case and secure it from underneath with 3 countersunk screws provided.

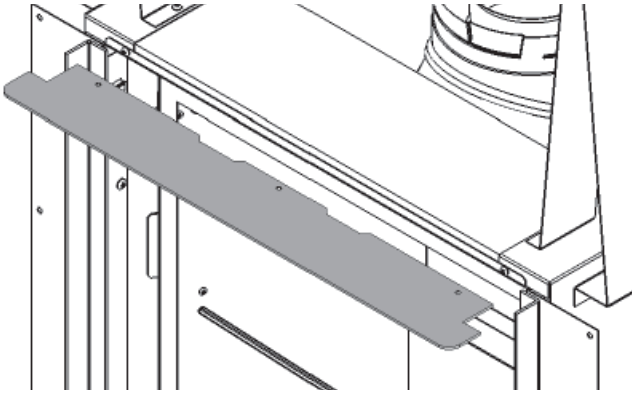

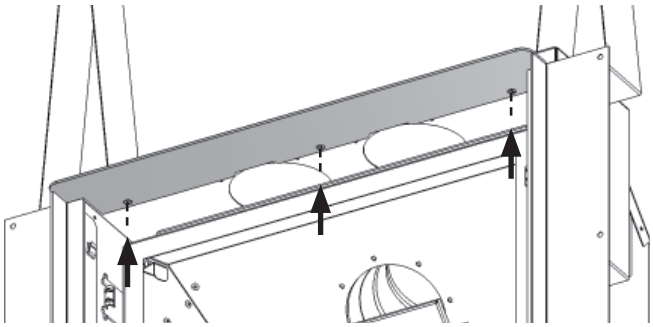

Viewed from underneath

5. Insert appliance into framing and center it laterally. Secure bottom panel to studs with 2 wood screws (not supplied).

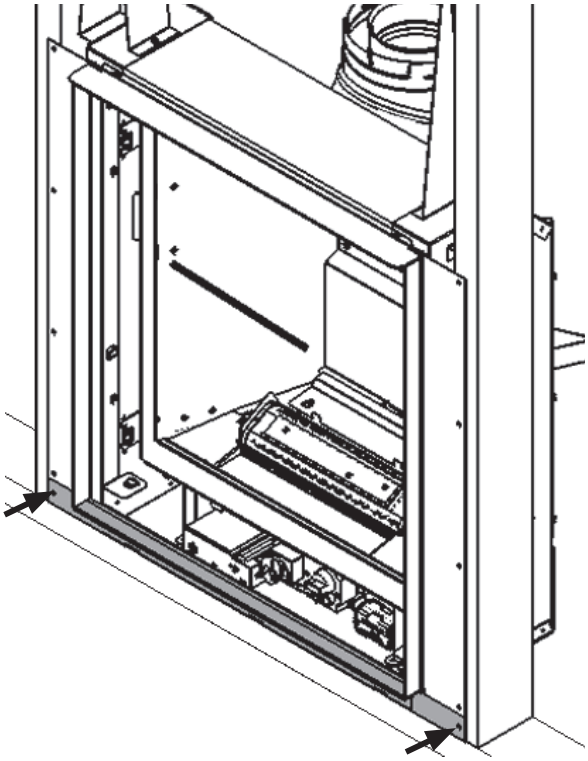

6. Install the top panel butting it to the top surface of the convection baffle; secure to the studs with 4 wood screws (not provided) (2/side).

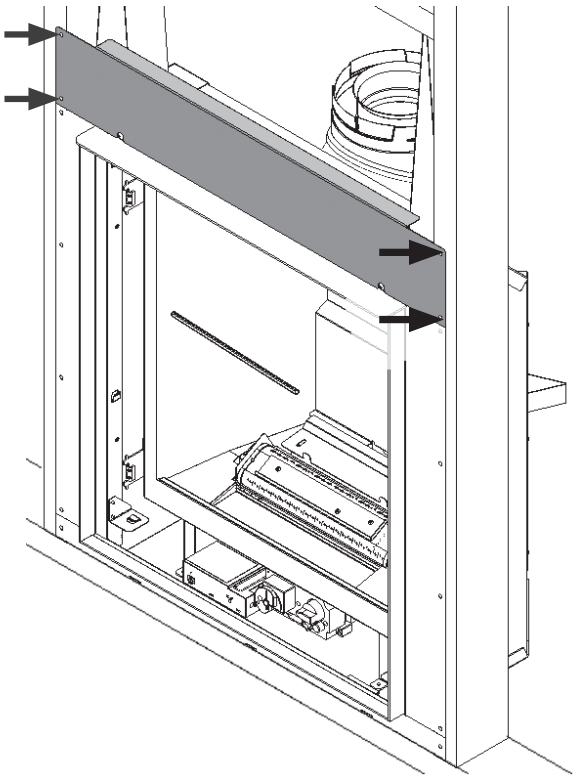

7. Adjust the side panels, releasing and retightening their fixing screws from inside the appliance, so they butt against the top panel and the convection bracket.

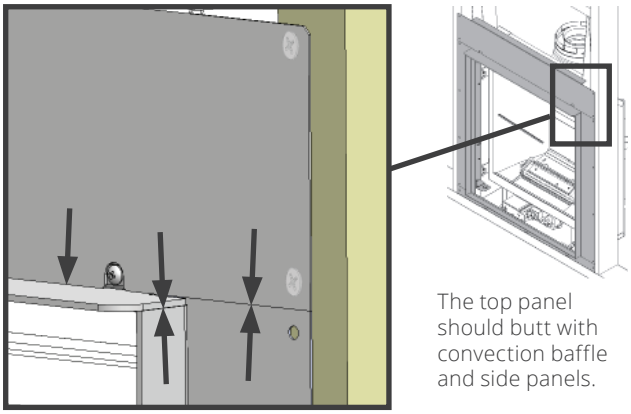

The top panel should butt with convection baffle and side panels.

8. Secure the side panels to the studs using 8 wood screws (not supplied) (4/side).

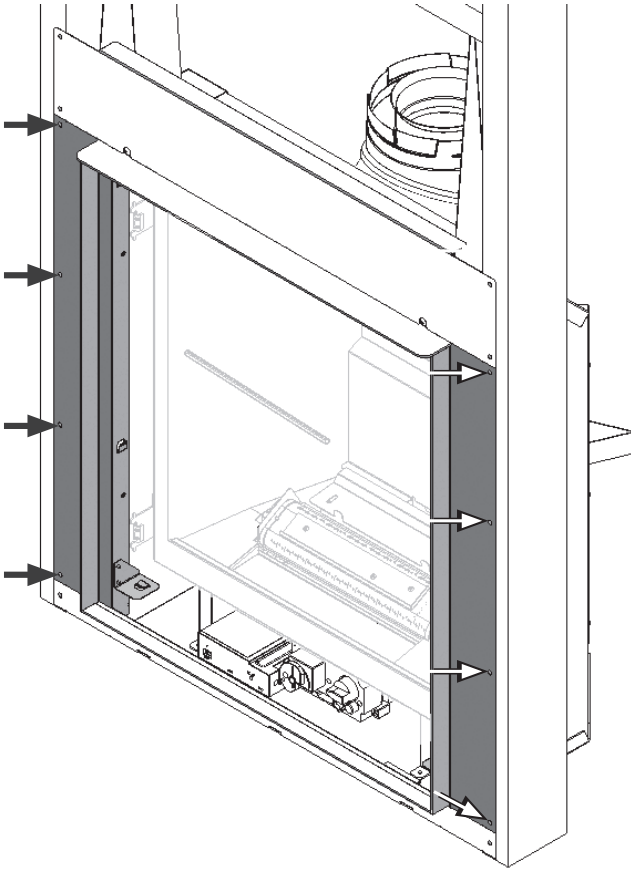

9. Set aside the removable panel, side doors and barrier screen to install later when the appliance's set-up and wall finish application are completed. Continue the installation of the appliance as indicated in its installation manual.

Install Appliance for 3 or 4-Sided Fronts—ZC

The 3-sided fronts with backing plate 235BPB1, 235BPB2* and 4-sided fronts/backing plate 240LF are fitted to appliance once its installation and wall finish application have been completed.

> **NOTE**
>
> *** 235SBPB1 ONLY installs in insert applications where the appliance is fully inserted into solid-fuel burning non-combustible fireplace/chimney—see page 27.**

Side brackets provided loose with appliance are required for those backing plates and fronts.

Yes

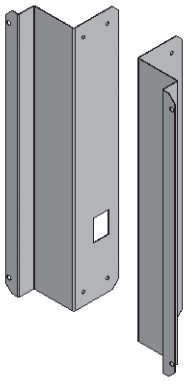

Hearth considerations

You need to know whether there will be a hearth or not in front of the appliance and some rules must be considered.

- The bottom of the appliance must be installed level with the top of the finished hearth or floor surface in most case other than with the **246LF Ledgeview 4-sided Fronts which hang 1-1/2" (38 mm) below the bottom of the appliance**.
- The surface of the combustible finished hearth or floor must be leveled to or below bottom of appliance.
- Most installations will require raising the appliance above the sub-floor to accommodate floor/hearth finishing in front.
- See *Framing* pages 15–16 for more information.

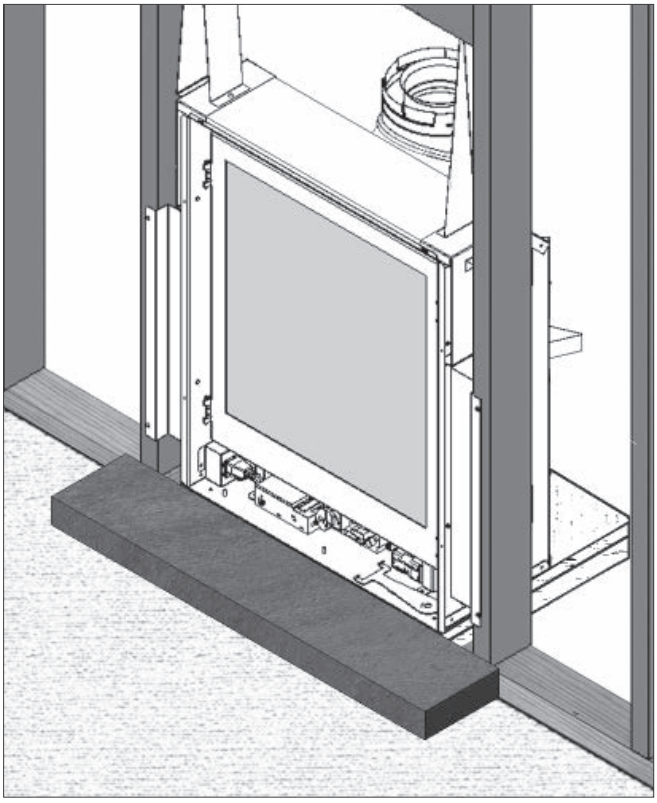

Surface of combustible hearth or flooring must be flush or below base of appliance.

Fit Appliance to Framing

1. Install stud brackets on each side of the appliance (2 screws per bracket) according to front selected.

   263RCB Richmond Cast Front: Use the brackets' front-most holes.

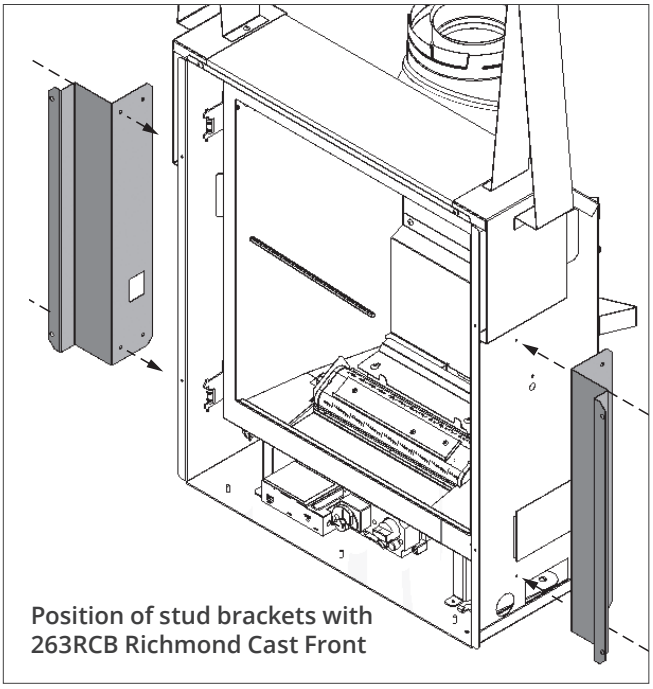

Position of stud brackets with 263RCB Richmond Cast Front

   Other 3 or 4 sided fronts: Use the brackets' rear-most holes.

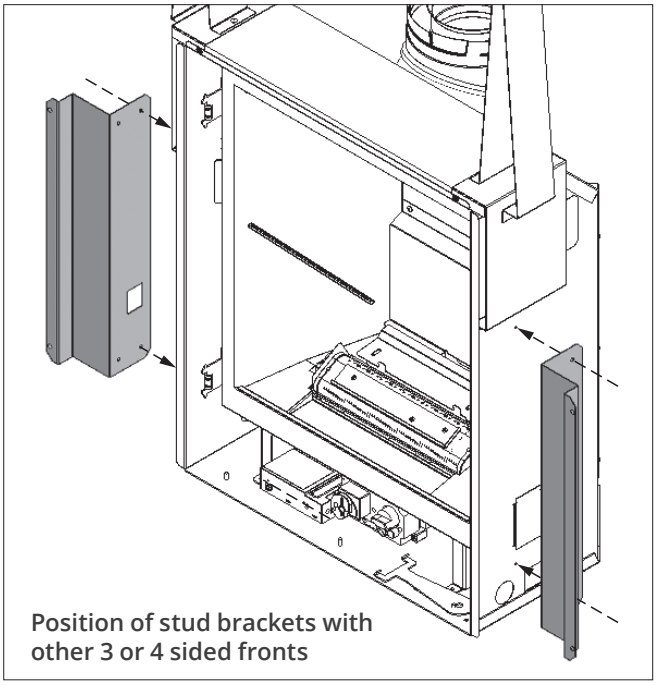

Position of stud brackets with other 3 or 4 sided fronts

2. Taking great care not to cut your hands on the sheet metal edges, place the appliance in the framing. **Make sure that the appliance is at the right height with consideration to the height of the hearth or combustible flooring.**

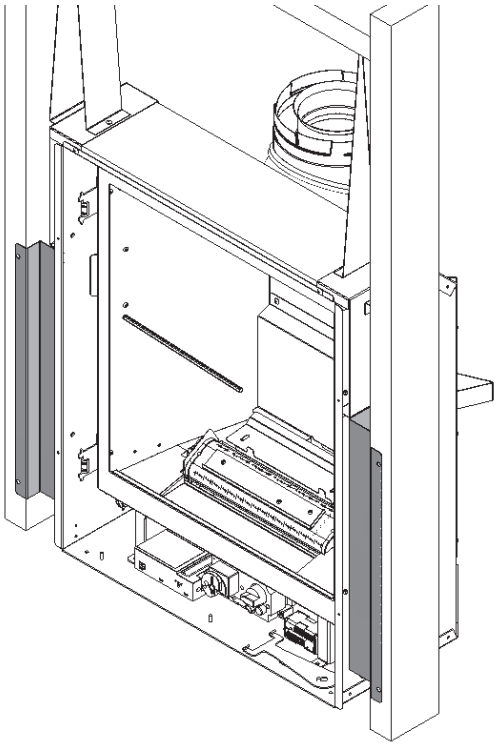

Connect Gas Supply

The gas supply inlet connection is a 3/8" NPT male connector located on the right hand side of the firebox.

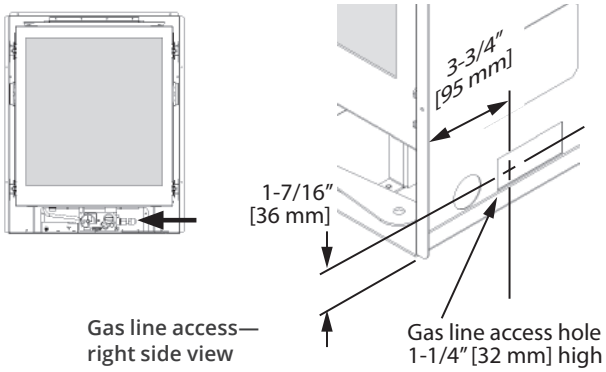

The unit is supplied with a stainless steel flex line to allow the appliance to be disconnected for service. An individual shut-off valve (not supplied) is required on the supply line ahead of the flex connector.

Use only new black iron or steel pipes, CSST, or copper tubing if acceptable—check local codes. **Note that in USA, copper tubing must be internally tinned for protection against sulfur compounds.**

Union in gas lines should be of ground joint type.

The gas supply line must be sized and installed to provide a supply of gas sufficient to meet the maximum demand of the appliance without undue loss of pressure.

Sealant used must be resistant to the action of all gas constituents including propane gas. Sealant should be applied lightly to male threads to ensure excess sealant does not enter gas lines.

The supply line should include a manual shut-off valve and union to allow the appliance to be disconnected for servicing.

Pressure test the supply line for leaks.

The appliance and its individual shut-off valve must be disconnected from the gas supply piping system during any pressure testing of that system at test pressures in excess of 1/2 psig (3.5kPa).

The appliance must be isolated from the gas supply piping system by closing its individual manual shut-off valve during any pressure testing of the gas supply piping system at test pressures equal to or less than 1/2 psig (3.5kPa).

Failure to either disconnect or isolate the appliance during pressure testing may result in regulator or valve damage. Consult your dealer in this case.

Pressure Test Points

The minimum supply pressure is given on page 6 of this manual.

All piping and connections must be tested for leaks after installation or servicing. All leaks must be corrected immediately.

When testing for leaks:

⚠ WARNING

NEVER USE OPEN FLAME to check for leaks. Correct any leak detected immediately.

- Make sure that the appliance is turned off.
- Open the manual shut-off valve.
- Test for leaks by applying a liquid detergent or soap solution to all joints. Bubbles forming indicate a gas leak.

The pressure test tapping locations are shown below. A built-in non-adjustable regulator controls the burner manifold pressure. The correct pressure range is shown page 6 of this manual. The pressure check should be made with the burner alight and at its highest setting. See *Appendix A – Lighting Instructions Plate* page 65 for full operating details.

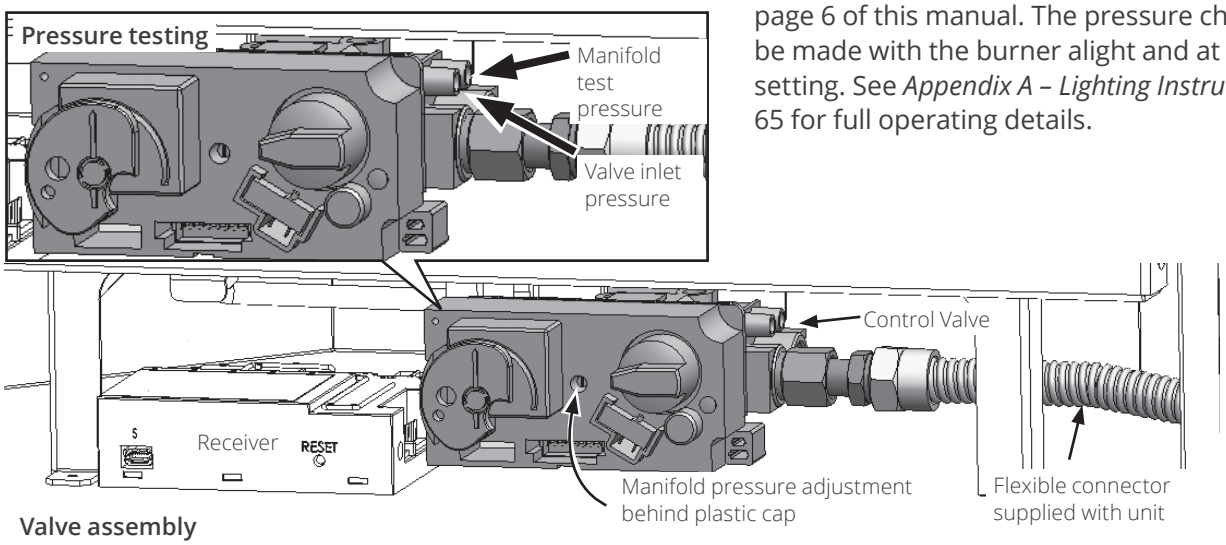

Valve assembly

Install Liners

The following guidelines apply to all liner sets.
The 270RGL—Reflective Glass liner set includes a ceramic filler panel for its rear and sides glass panels.

1. Unpack the liners carefully as they are fragile.
2. On the left hand side at the top of the firebox, remove the side panel anchor lifting it and sliding it over the screw head. Set aside.
   NOTE: It is not necessary to remove both anchors. If the screws are tight, release them without removing them.

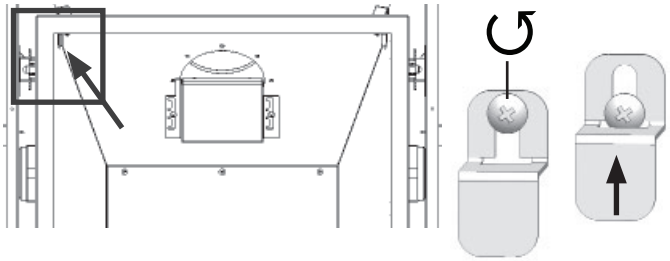

3. Remove the burner cover by removing 2 screws at the back. It is not necessary to remove the log support which should be at its forward most position.

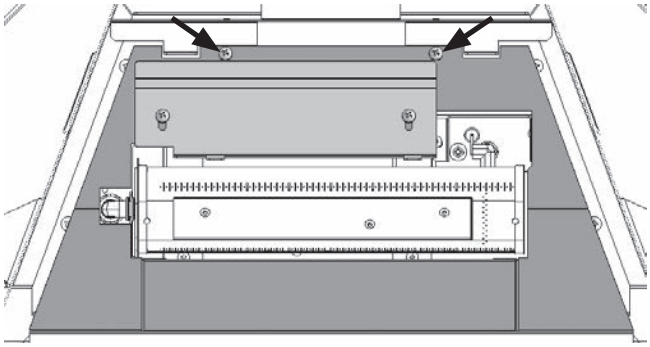

4. **270RGL:** Prepare the glass panels matching them to the corresponding filler panels as you will need to take them together with a single hand. Both side filler panels are the same.

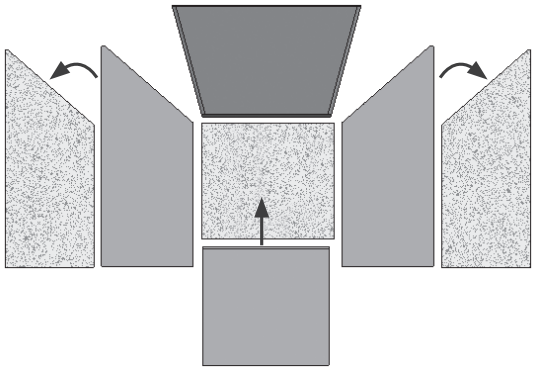

5. Take the rear panel, bevel at the top facing you. Place the panel against the firebox baffle resting it on the bottom ledge.

   270RGL: Take the rear filler panel, bevel at the top facing you. On top of it place the rear glass panel, smooth side facing you. Holding them both together, place them against the firebox baffle resting them on the bottom ledge.

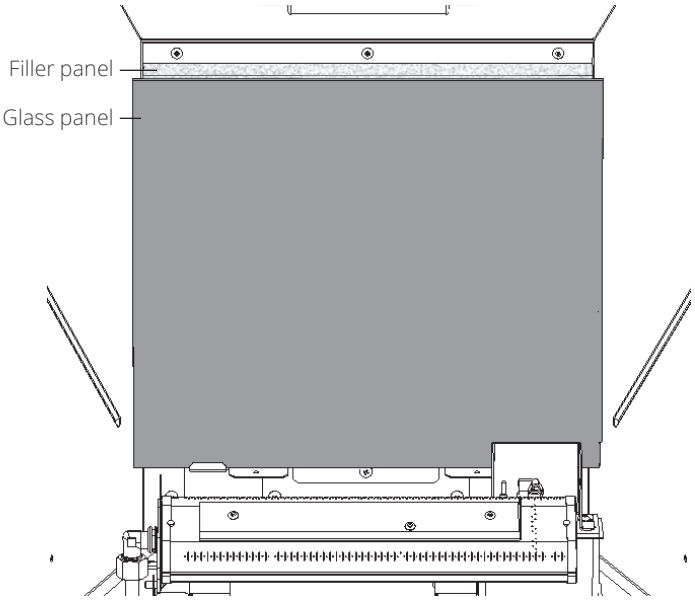

Glass & filler panels shown

6. While holding the rear panel, place the right hand side panel against the side of the firebox. It will hold the rear panel. Secure rotating the side panel anchor over it.

   270RGL: Take both filler panel and right glass panel together, smooth side visible, and place them

against the side of the firebox. Secure them rotating the side panel anchor over them.

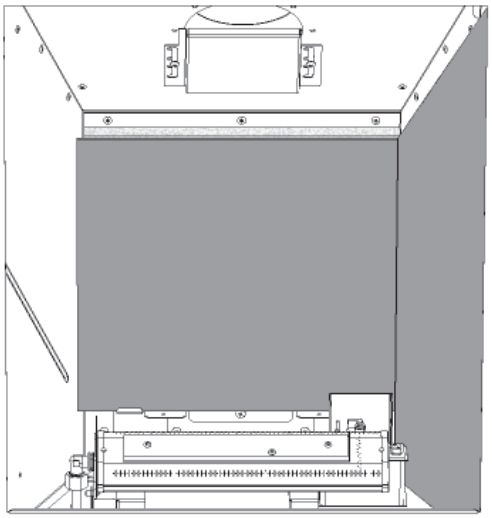

7. Carefully insert the top panel, rear bevel towards the fireside, resting it on the rear and right side panels.

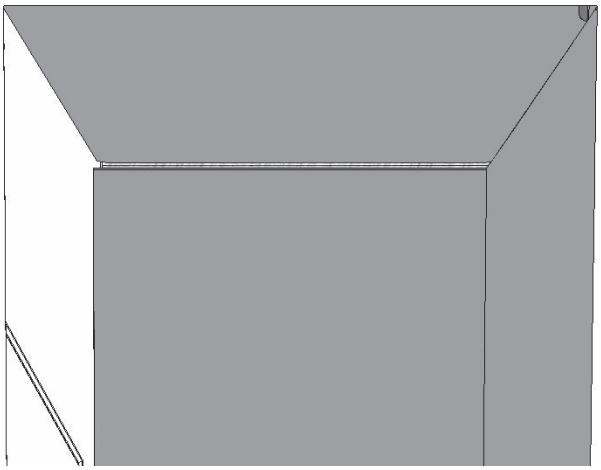

8. Insert the left hand side panel against the side of the firebox.

   270RGL: Take both filler panel and left glass panel together, smooth side visible, and place them against the side of the firebox.

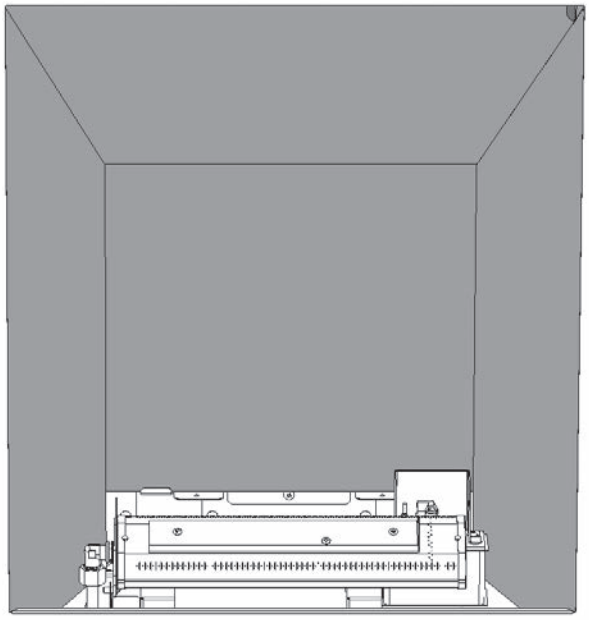

9. Reinstall the left side panel anchor sliding the screw head through it; rotate the anchor to secure the panel.

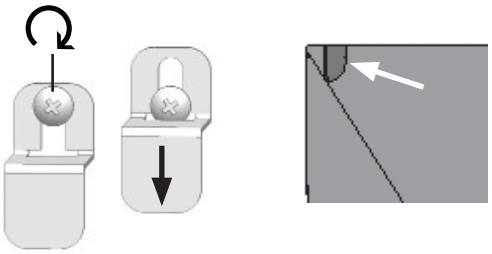

10. Adjust the top panel so it rests on all 3 panels closing any gap with the rear panel.
11. Reinstall the burner cover placing the rear first, being careful around the pilot and burner. Secure it with 2 screws removed earlier.

Traditional Logs 205LSK

Material required

- Traditional log set which contains:
  - 7 logs
  - 1 small bag of embers
- Gloves, if desired (not included)

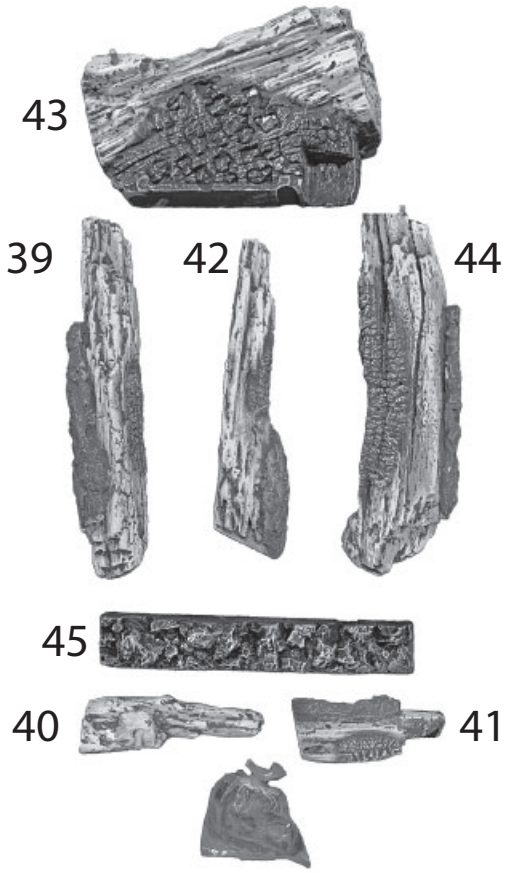

Installation

Carefully unpack the kit. Identify each log according to the above image.

1. Place ember log 45 directly on the burner, its underside groove fitting on the front raised flange of the burner. Slide the log all the way to the left.

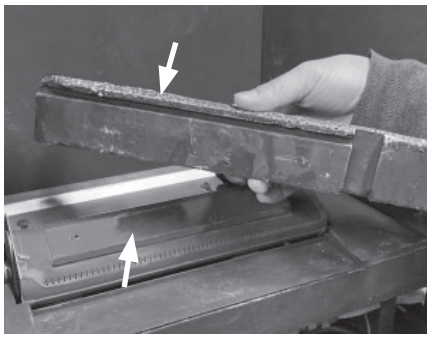

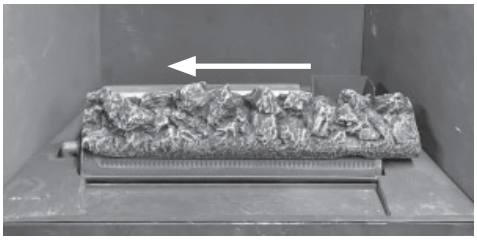

2. Place log 43 on the log support behind the burner, resting the log against the vertical tabs. Slide it all the way to the right to overhang the pilot.

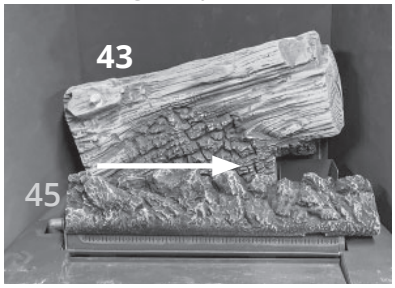

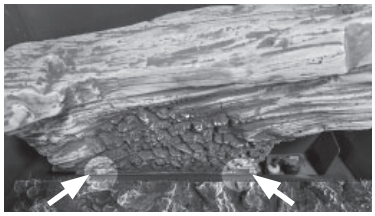

Top view behind burner

3. Place log 39, first sitting its notched bottom squarely against the front edge of the firebox then fitting its back hole onto the pin of log 43.

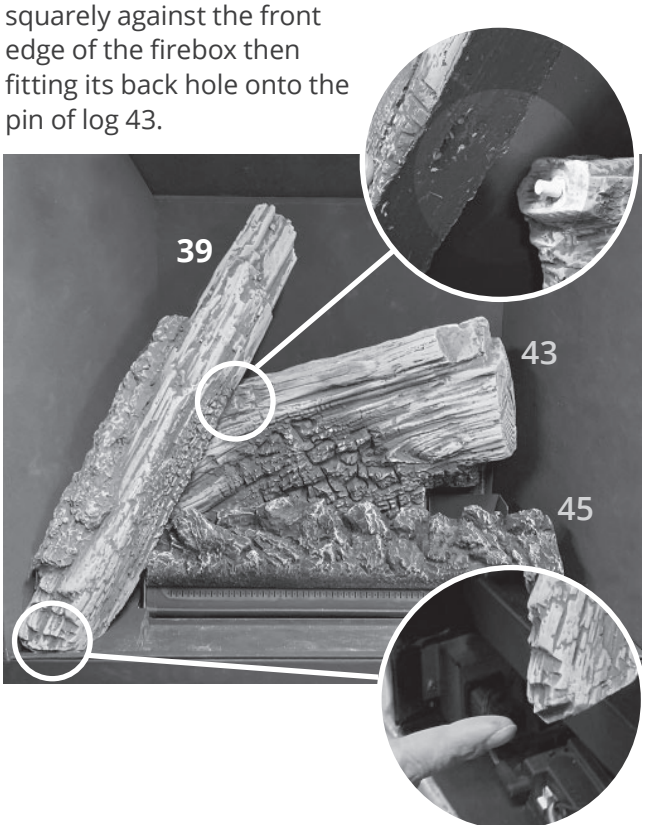

4. Place log 44, first sitting its notched bottom squarely against the front edge and right hand side of the firebox, then resting its rear opening on the notch of log 43.

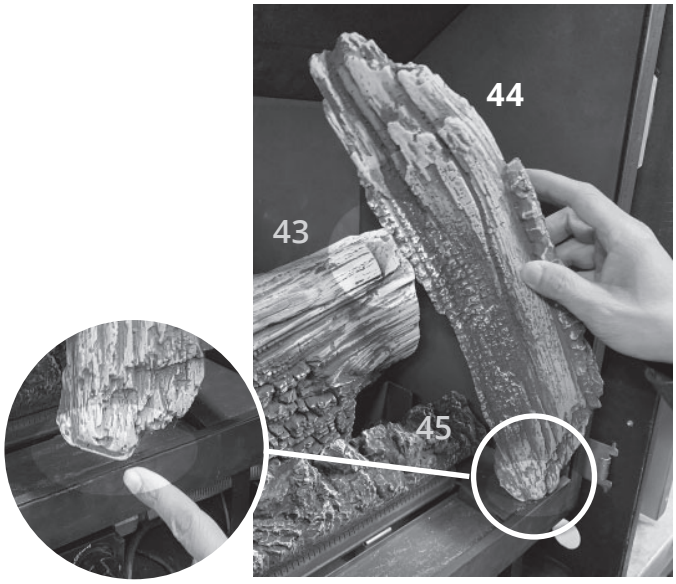

5. Place log 40 left, in the front cavity next to log 39.

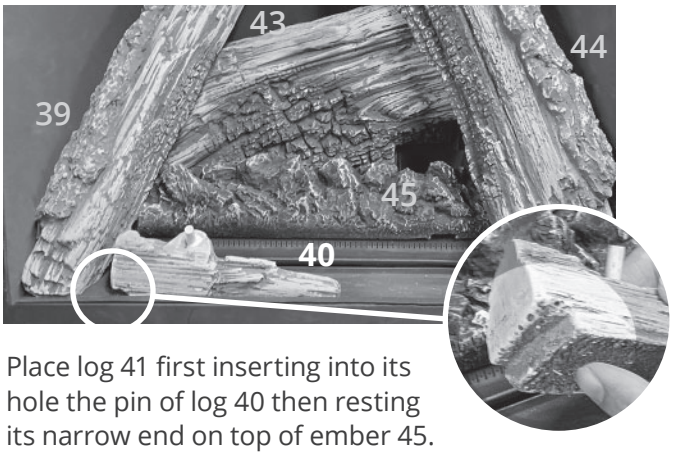

6. Place log 41 first inserting into its hole the pin of log 40 then resting its narrow end on top of ember 45.

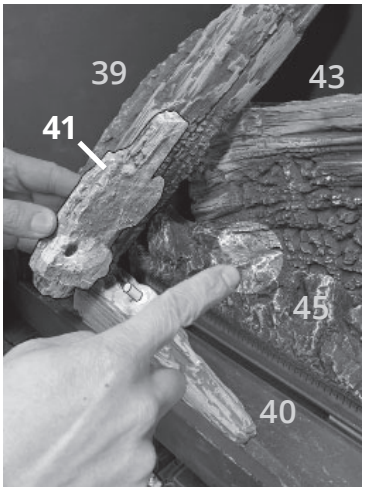

IMPORTANT

Approved for use only with the ceramic embers provided with your Valor fireplace. The use of any other products may void your fireplace warranty.

7. Place log 42, first sitting its notched bottom squarely against the edge of the firebox in the front cavity at the right, then resting its top end on log 39.

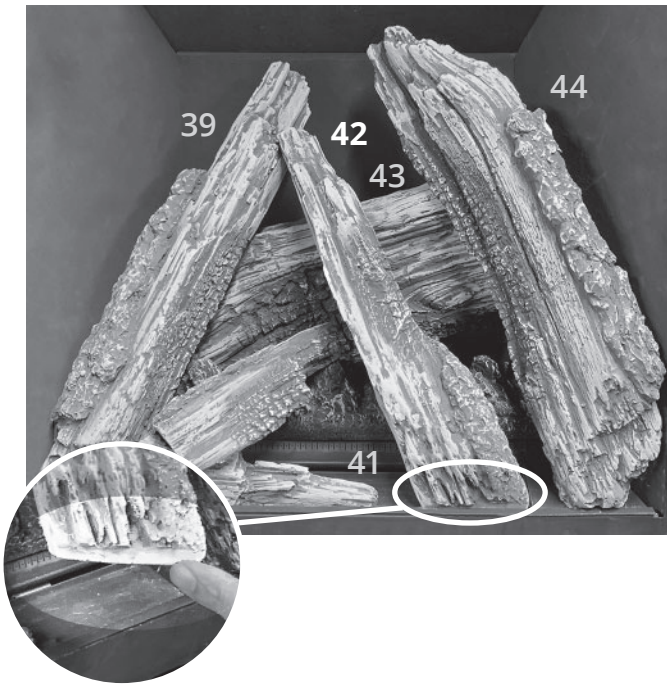

8. Place the embers by hand between the logs at the front and on top of log 40 to hide the burner ports.

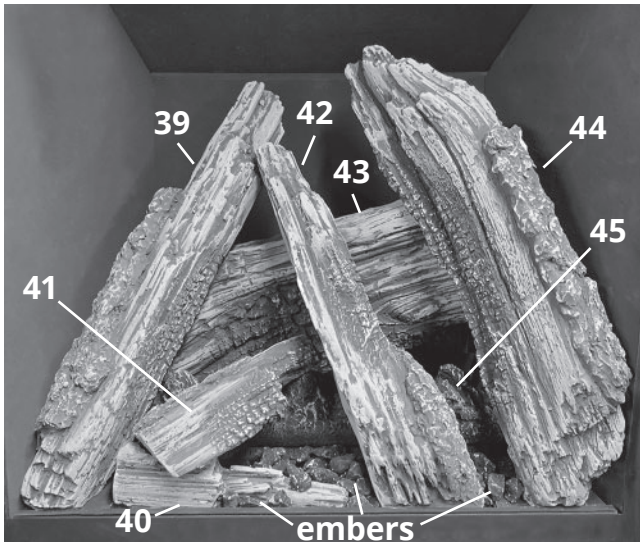

⚠ WARNING

Choking Hazard! Ensure that the fireplace area is clear of embers as these could be ingested by small children. Vacuum area after installation.

Birch Logs 205BLK

Material required

- Birch log set which contains:
  - 7 logs
  - 1 small bag of embers
- Gloves, if desired (not included)

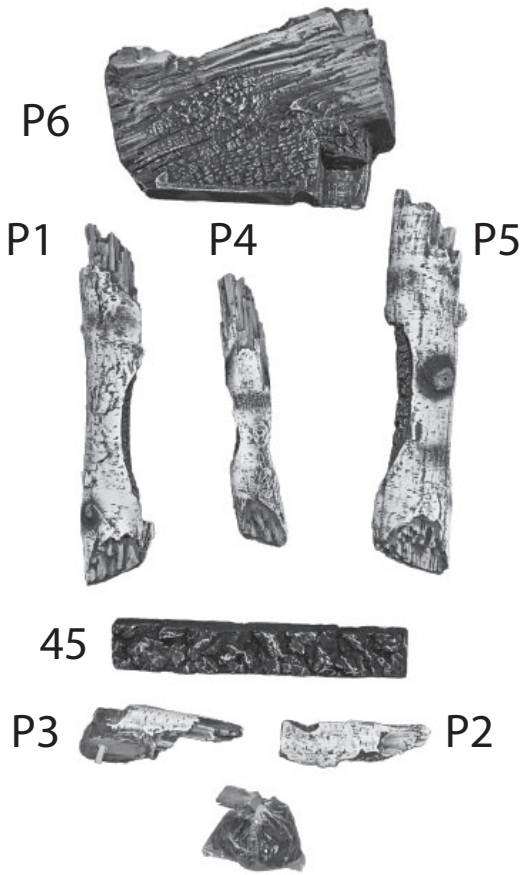

Installation

Carefully unpack the kit. Identify each log according to the above image.

1. Place ember log 45 directly on the burner, its underside groove fitting on the front raised flange of the burner. Slide the log all the way to the left.

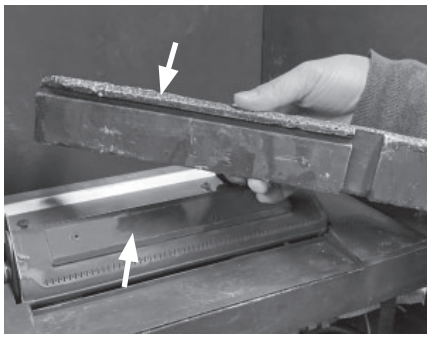

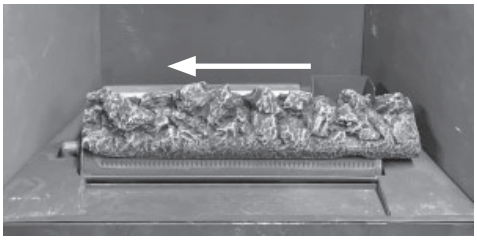

2. Place log P6 on the log support behind the burner, resting the log against the vertical tabs. Slide it all the way to the right to overhang the pilot.

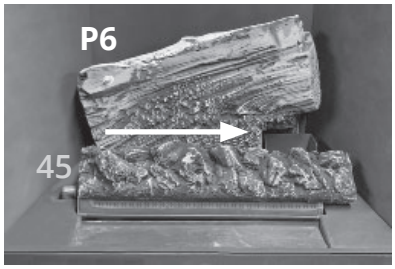

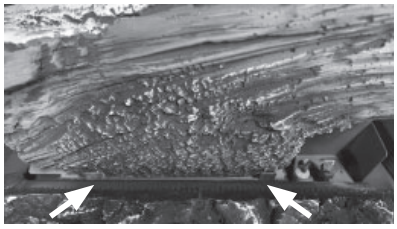

Top view behind burner

3. Place P1, first sitting its notched bottom squarely against the front edge of the firebox then fitting its back hole onto the pin of P6.

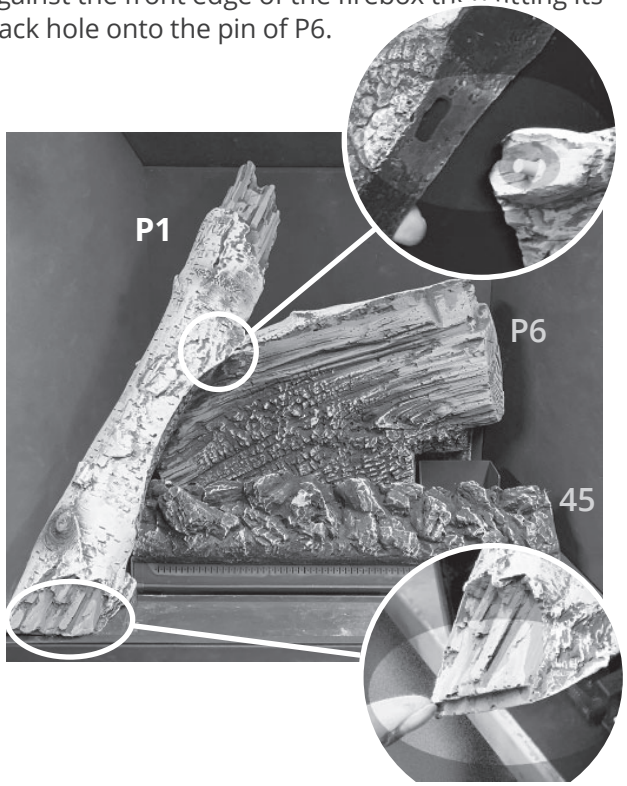

4. Place P5, first sitting its notched bottom squarely against the front edge and right hand side of the firebox, then resting its rear opening on the notch of P6.

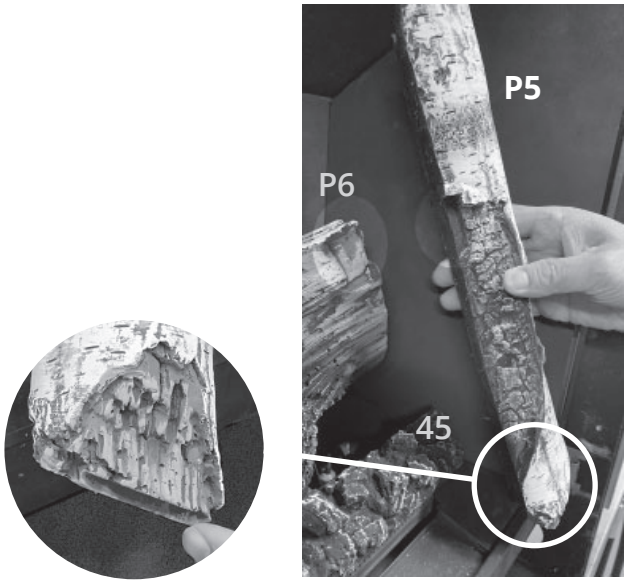

5. Place P3 left, in the front cavity next to P1.

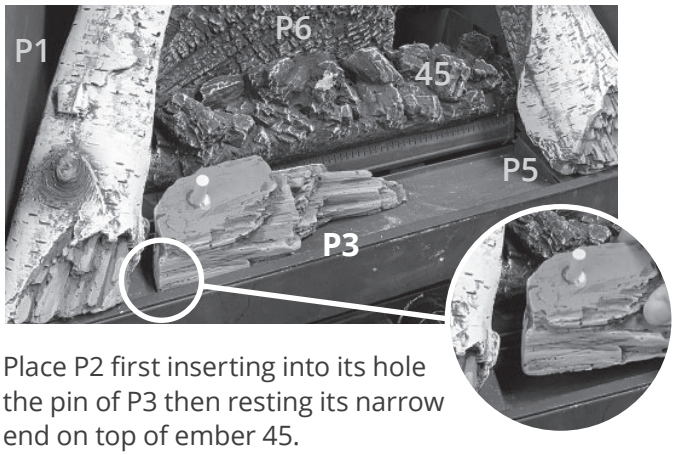

6. Place P2 first inserting into its hole the pin of P3 then resting its narrow end on top of ember 45.

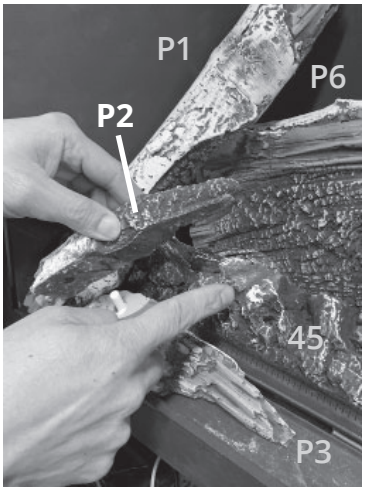

IMPORTANT

Approved for use only with the ceramic embers provided with your Valor fireplace. The use of any other products may void your fireplace warranty.

7. Place P4, first sitting its notched bottom squarely against the edge of the firebox in the front cavity at the right, then resting its top end on log P6.

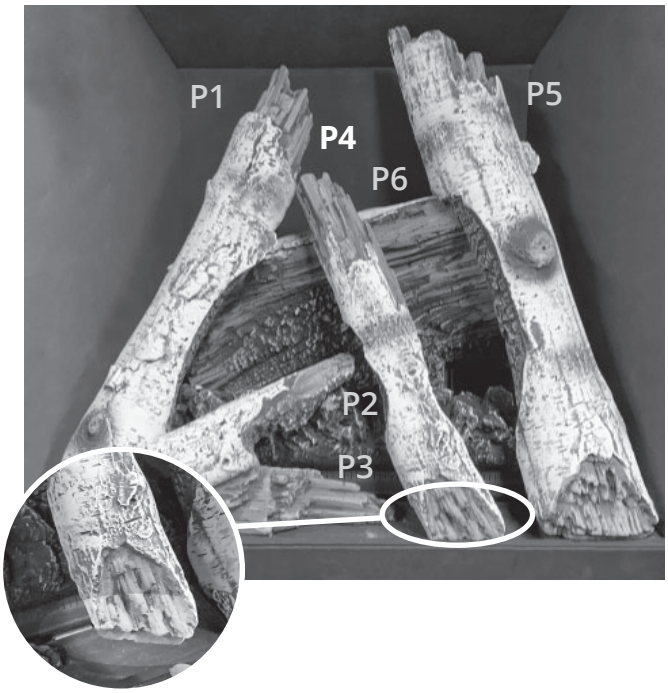

8. Place the embers by hand between the logs at the front and on top of log P3 to hide the burner ports.

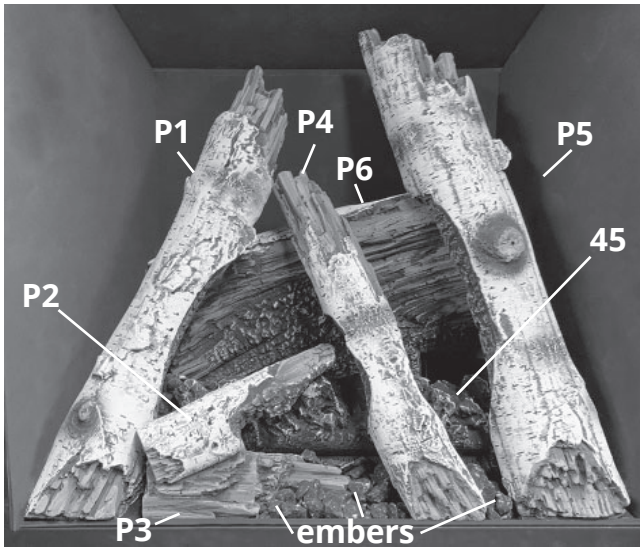

⚠ WARNING

Choking Hazard! Ensure that the fireplace area is clear of embers as these could be ingested by small children. Vacuum area after installation.

Driftwood Logs 205DWK

Material required

Driftwood log set which contains:

- 7 logs
- 1 small bag of embers

• Gloves, if desired (not included)

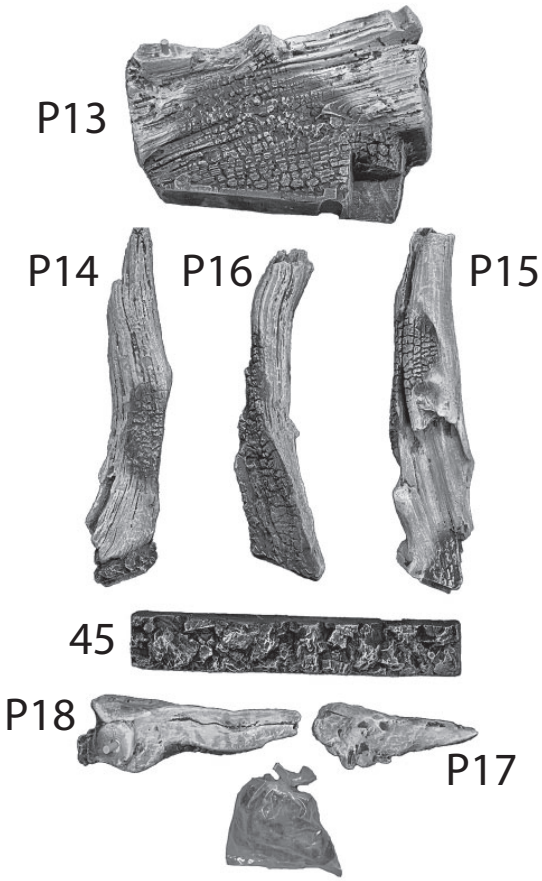

Installation

Carefully unpack the kit. Identify each log according to the above image.

1. Place ember log 45 directly on the burner, its underside groove fitting on the front raised flange of the burner. Slide the log all the way to the left.

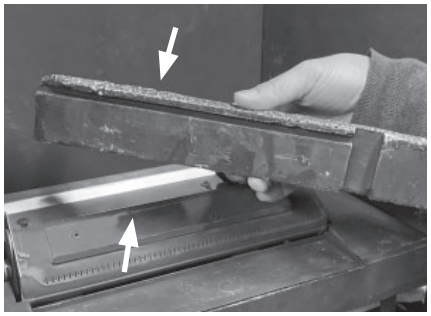

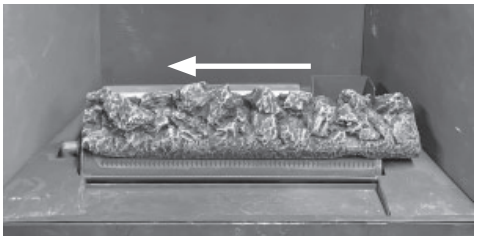

2. Place log P13 on the log support behind the burner, resting the log against the vertical tabs. Slide it all the way to the right to overhang the pilot.

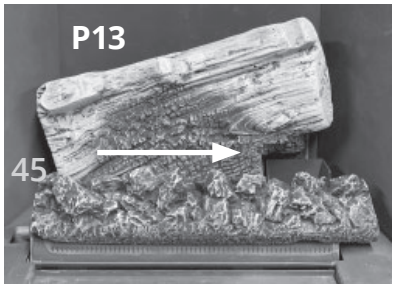

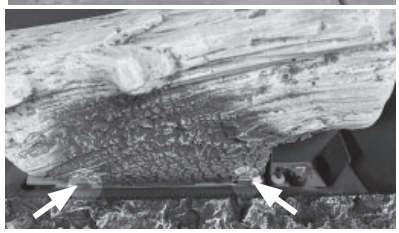

Top view behind burner

3. Place P14, first sitting its notched bottom squarely against the front edge of the firebox then fitting its back hole onto the pin of P13.

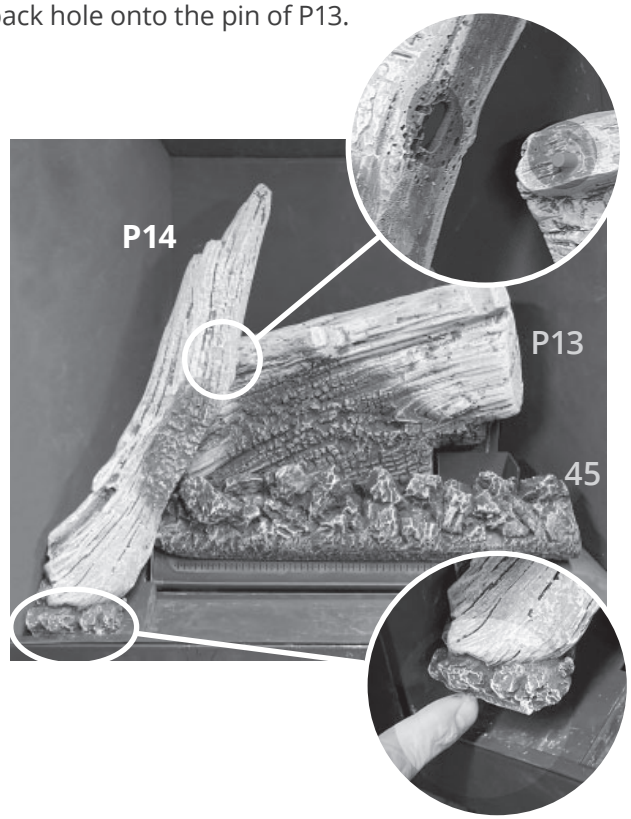

4. Place P15, first sitting its notched bottom squarely against the front edge and right hand side of the firebox, then resting its rear opening on the notch of P13.

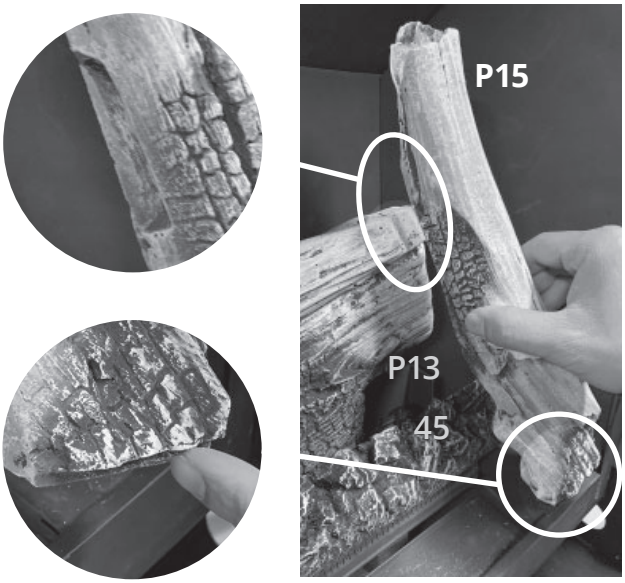

5. Place P18 left, in the front cavity next to P14.

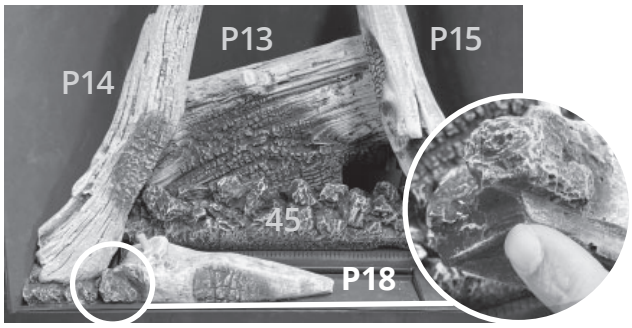

6. Place P17 first inserting into its hole the pin of P18 then resting its narrow end on top of ember 45.

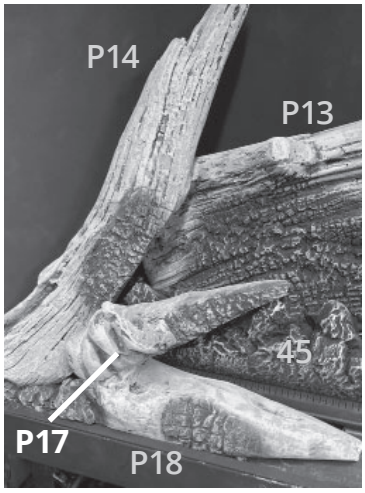

IMPORTANT

Approved for use only with the ceramic embers provided with your Valor fireplace. The use of any other products may void your fireplace warranty.

7. Place P16, first sitting its notched bottom squarely against the edge of the firebox in the front cavity at the right, then resting its top end on the notch on P13.

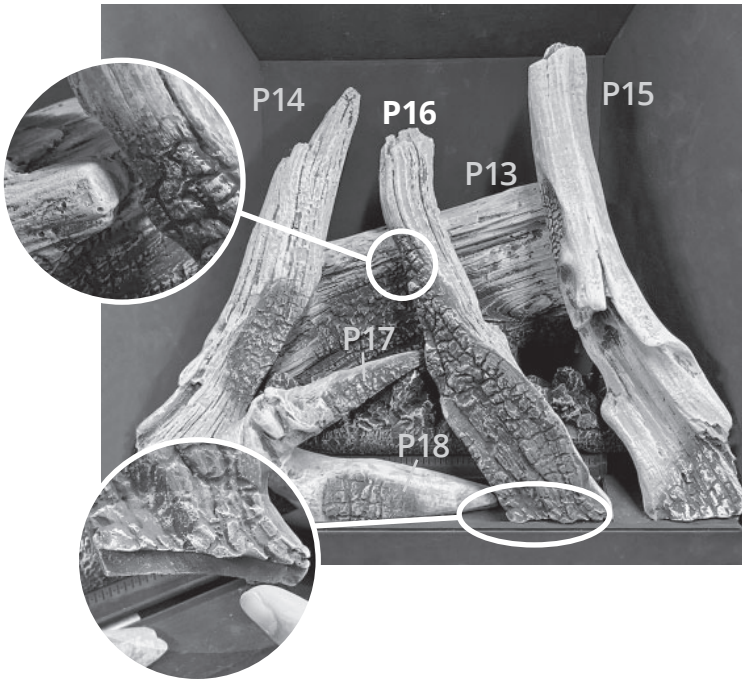

8. Place the embers by hand between the logs at the front and on top of log P18 to hide the burner ports.

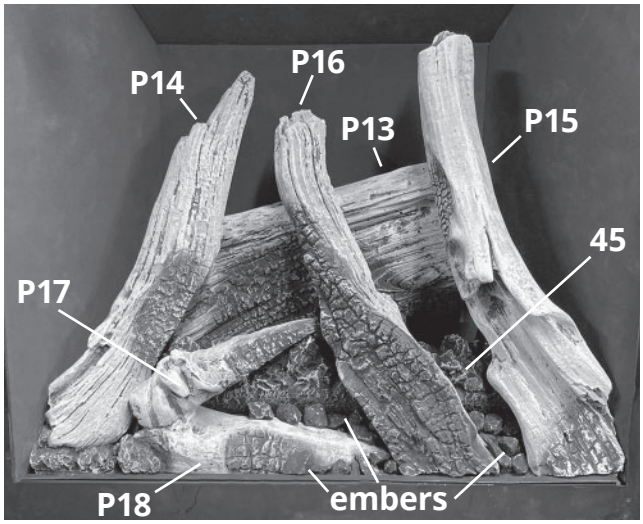

⚠ WARNING

Choking Hazard! Ensure that the fireplace area is clear of embers as these could be ingested by small children. Vacuum area after installation.

Coal Set 205CSK

Material required

Coal set which contains:

- 3 coal pieces
- 1 decorative fire back panel

• Gloves, if desired (not included)

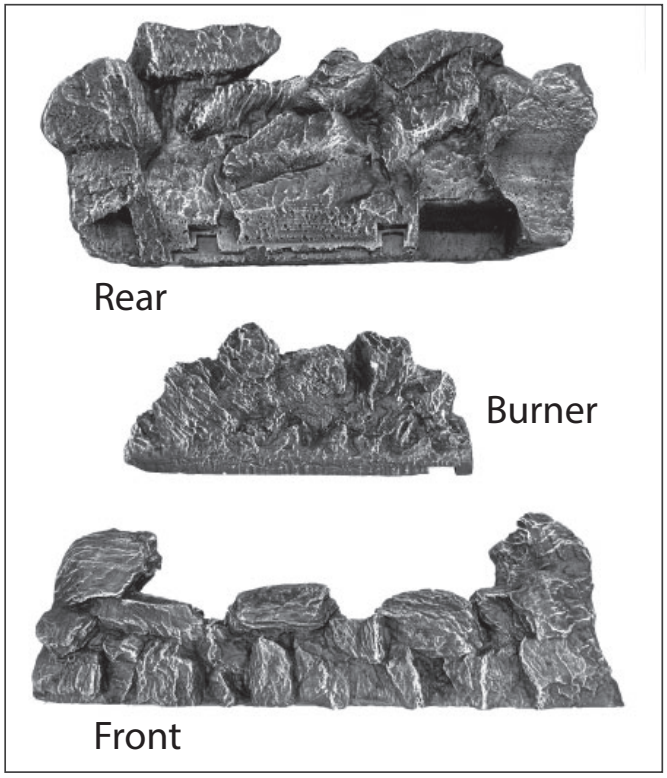

Installation

Carefully unpack the kit. Identify each piece according to the above image.

1. Place the burner piece on the burner, its underside groove fitting on the front raised flange of the burner.

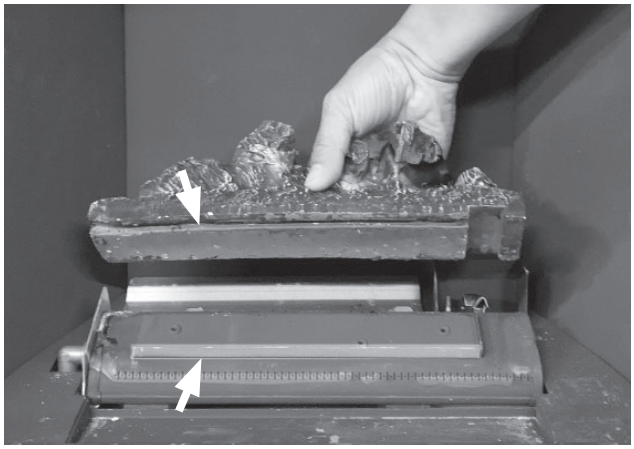

2. Place the front piece on the front of the burner with its front edge resting against the firebox edge. Some parts of the piece will protrude on the firebox edge.

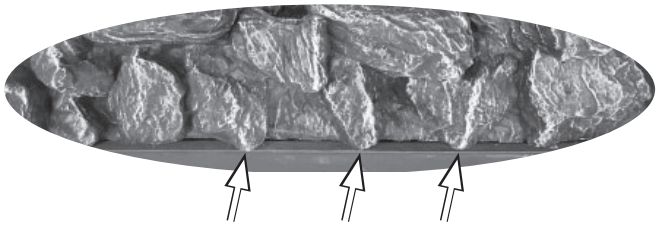

3. Carefully place the rear piece on the support behind the burner paying careful attention to the pilot area which goes into the coal piece cutout. On each side, the piece mates with the front arrangement.

205CSK installed

Install Battery Holder

The batteries that power the receiver and handset need to be installed prior to pairing and use.

1. Take the receiver out from under the firebox.
2. Insert four 1.5 V AA high quality **alkaline** batteries in the battery holder.
   The battery holder and cable are supplied with the appliance.

3. Connect the cable to the receiver as shown.

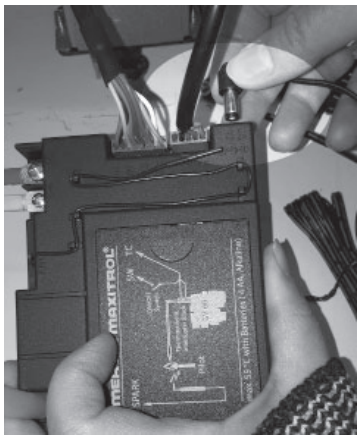

4. Connect the other end of the cable to the battery holder..

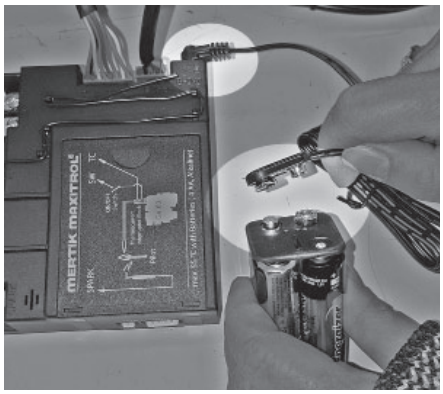

5. Place the receiver and battery holder as shown below (placement may vary with installed options).

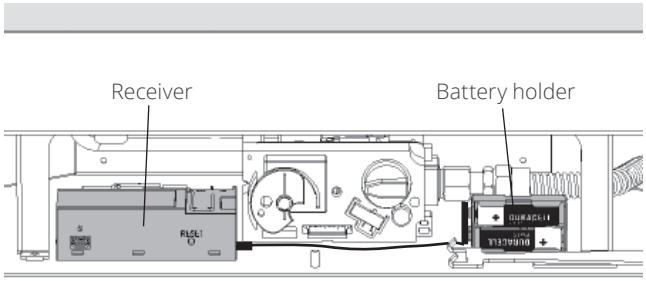

6. Use a heat-resistant tie to gather any extra cable between the receiver and the holder.

Caution

DO NOT let the cable touch the burner plate above, it will melt during operation.

Caution

DO NOT put batteries in the receiver as leaking acid could damage its circuit board.

Installation

Remote Control Initial Pairing

The receiver and the handset of the remote control system must be initially paired before the first use.

1. Insert two 1.5 V AAA high quality **alkaline** batteries in the handset.
2. Locate the Reset button on the front side of the receiver.
3. With a thin object, press and hold the receiver's RESET button until you hear one short and one long beeps. After the second beep, release the reset button.
4. Within the subsequent 20 seconds, press and hold the ▼ button on the remote handset for 2-3 seconds. COM will be displayed on the handset during the pairing sequence. You will hear two short beeps confirming the pairing is done.

If you hear one long beep, the pairing sequence has failed or the wiring is incorrect.

This is a one time pairing only and is not required when changing the batteries of the handset or battery holder. The remote control system is now ready to use.

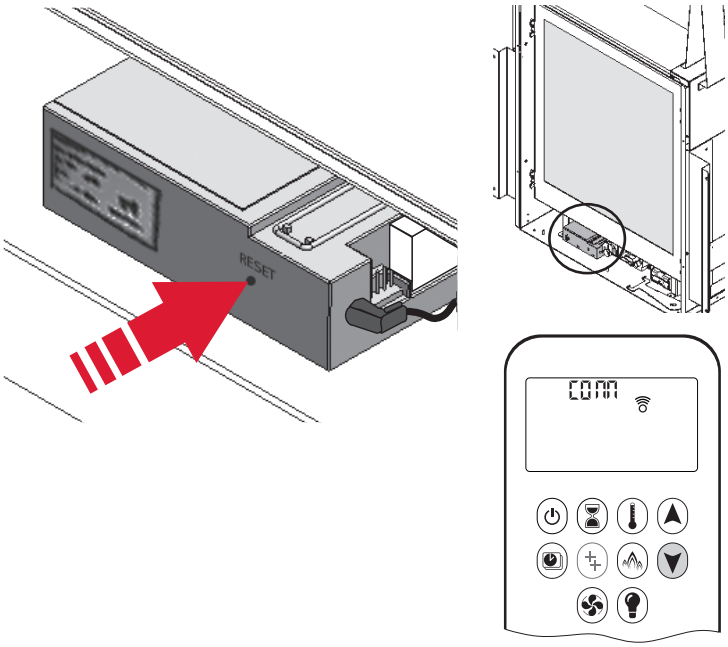

Radio Frequency

918.0 MHz for USA and Canada.

This device complies with Part 15 of the FCC Rules and with Industry Canada license-exempt RSS standard(s). Operation is subject to the following two conditions:

(1) this device may not cause harmful interference, and

(2) this device must accept any interference received, including interference that may cause undesired operation.

Install Remote Control Handset Wall Holder

The remote control kit for this fireplace comes complete with a wall-mounted holder. This holder is not required in all installations but is provided as an optional feature for those customers who wish to mount the remote handset to the wall.

To install the holder to the wall, find a convenient location and use the hardware provided with the kit. Cover the screws with the included caps to finish the mounting.

Once mounted, the holder is magnetic - simply place the remote gently into the holder.

IMPORTANT: The location of the remote control handset is important to assure proper temperature regulation. To obtain a constant temperature, we recommend that the handset should be **between 3 and 15 feet away from the appliance but not directly above it**. We also advise that the handset should be located away from any other heat source and not in direct sunlight as this may affect the temperature sensor located in the remote handset.

Check Operation & Burner aeration

Check Operation

Turn the fireplace flame up and down using the remote control to confirm that the full range of inputs is achieved—see *Appendix B – Remote Control Operation* pages 66–69 for details.

Adjust Aeration (if needed)

Light the fire and allow the unit to warm up for 10–15 minutes to evaluate the flame picture. Burners are equipped with an adjustable shutter to control primary aeration. See figures below. The shutter is factory-set to an aeration gap which will give optimum performance for the vast majority of installations.

In some installations, depending of the fuel bed used, the altitude and other considerations, the flame picture may be improved by adjusting the aeration. The need for adjustment should be determined only by operating the appliance with the fuel bed and window installed and evaluating the flame picture after a 15-minute warm-up.

Increasing aeration (open) will cause the flames to appear more transparent and blue showing more ceramic effects glow.

Decreasing aeration (close) will cause flames to appear more yellow or orange showing less ceramic effects glow.

Too little aeration may result in black carbon forming on logs or roof panel and dropping into the firebox. May also result in carbon or soot stains on the vent termination and exterior wall around the termination! The Manufacturer is not responsible for any damage caused by an air shutter setting with too little aeration.

Air Shutter

The air shutter adjustment lever is located under the firebox. If the front is already installed, remove the barrier screen, the side doors and removable panel to access the lever.

To adjust the air shutter:

1. Locate the aeration lever under the firebox left of the gas valve.
2. Move the lever side to side to reduce or increase aeration.

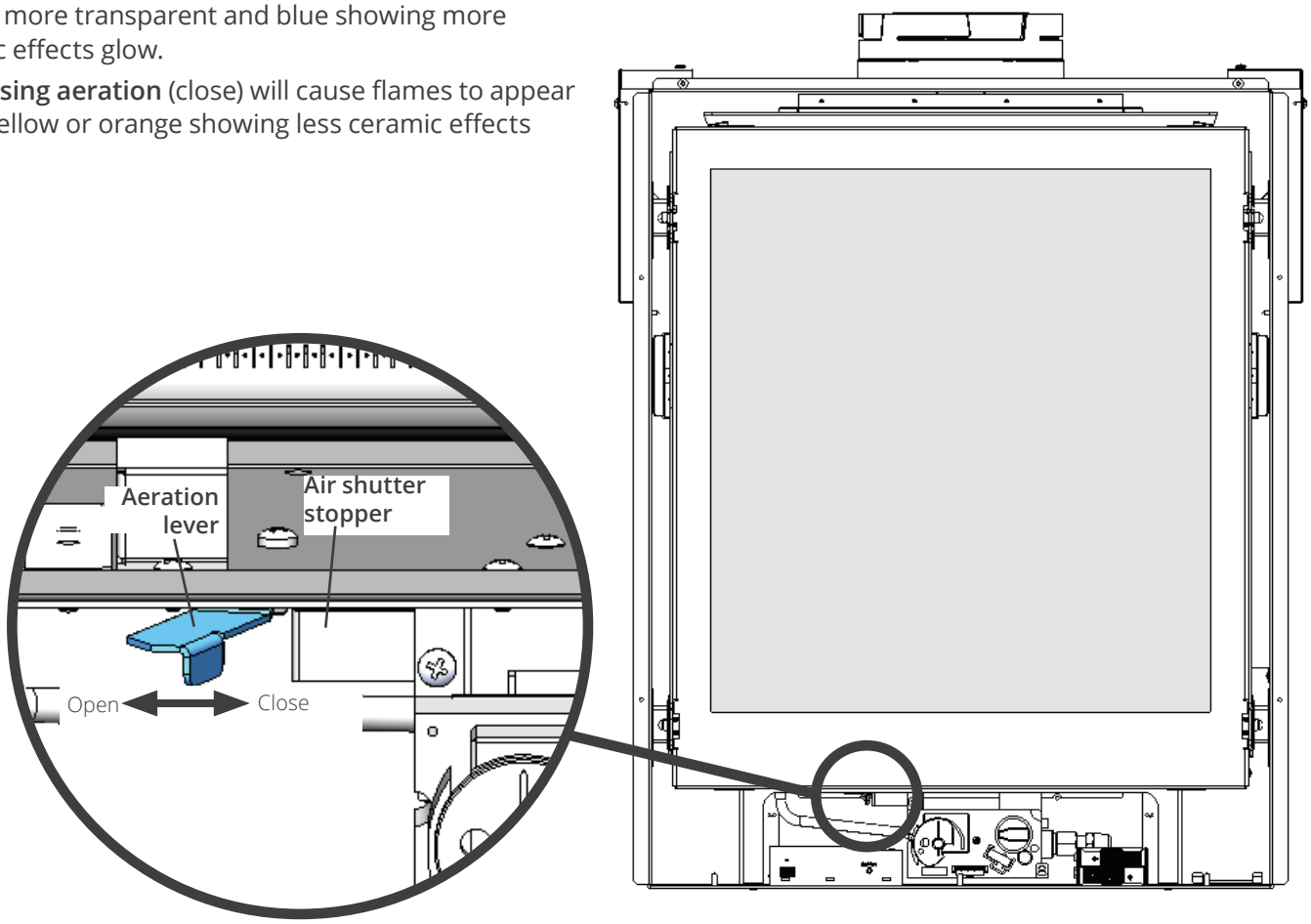

Front and Barrier Screen

Install the front chosen by the customer for the fireplace. Install as well the barrier screen which is provided with the front.

Show the customer how to access the controls when the front is installed and how to remove it.

Follow the instructions provided with the front and leave those instructions behind for the customer's futher reference.

Wiring Diagram

GV60

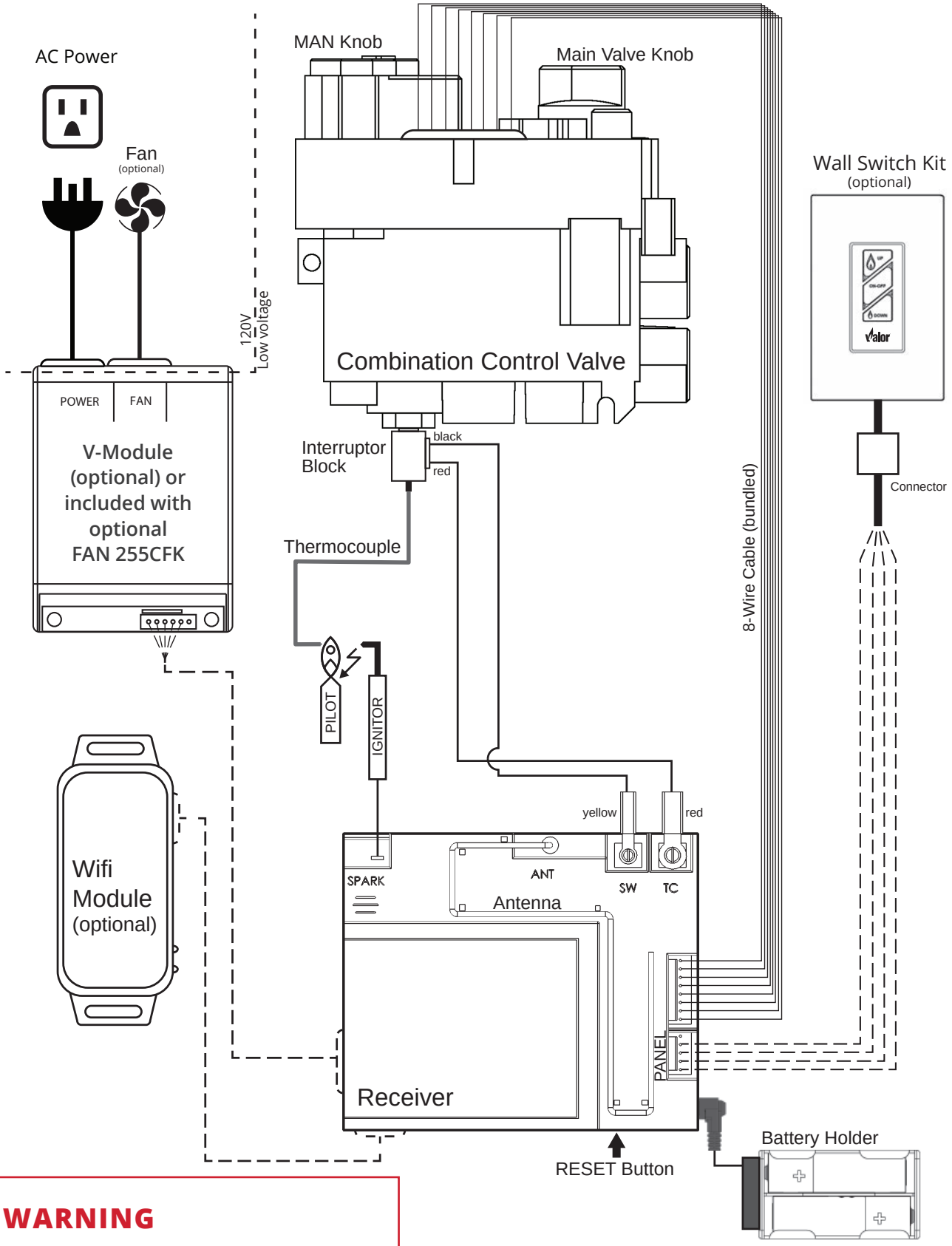

WARNING

NO ELECTRICAL CONNECTION ALLOWED for any outdoor installation!

Commonwealth of Massachusetts

State of Massachusetts Carbon Monoxide Detector/Vent Terminal Signage Requirements

For all side wall horizontally vented gas fueled equipment installed in every dwelling, building or structure used in whole or in part for residential purposes, including those owned or operated by the Commonwealth and where the side wall exhaust vent termination is less than seven (7) feet above finished grade in the area of the venting, including but not limited to decks and porches, the following requirements shall be satisfied:

1. INSTALLATION OF CARBON MONOXIDE DETECTORS. At the time of installation of the side wall horizontal vented gas fueled equipment, the installing plumber or gas fitter shall observe that a hard wired carbon monoxide detector with an alarm and battery back-up is installed on the floor level where the gas equipment is to be installed. In addition, the installing plumber or gas fitter shall observe that a battery operated or hard wired carbon monoxide detector with an alarm is installed on each additional level of the dwelling, building or structure served by the side wall horizontal vented gas fueled equipment. It shall be the responsibility of the property owner to secure the services of qualified licensed professionals for the installation of hard wired carbon monoxide detectors.

a. In the event that the side wall horizontally vented gas fueled equipment is installed in a crawl space or an attic, the hard wired carbon monoxide detector with alarm and battery back-up may be installed on the next adjacent floor level.

b. In the event that the requirements of this subdivision can not be met at the time of completion of installation, the owner shall have a period of thirty (30) days to comply with the above requirements; provided, however, that during said thirty (30) day period, a battery operated carbon monoxide detector with an alarm shall be installed.

2. APPROVED CARBON MONOXIDE DETECTORS. Each carbon monoxide detector as required in accordance with the above provisions shall comply with NFPA 720 and be ANSI/UL 2034 listed and IAS certified.

3. SIGNAGE. A metal or plastic identification plate shall be permanently mounted to the exterior of the building at a minimum height of eight (8) feet above grade directly in line with the exhaust vent terminal for the horizontally vented gas fueled heating appliance or equipment. The sign shall read, in print size no less than one-half (1/2) inch in size, “GAS VENT DIRECTLY BELOW. KEEP CLEAR OF ALL OBSTRUCTIONS”.

4. INSPECTION. The state or local gas inspector of the side wall horizontally vented gas fueled equipment shall not approve the installation unless, upon inspection, the inspector observes carbon monoxide detectors and signage installed in accordance with the provisions of 248 CMR 5.08(2)(a)1 through 4.

(b) EXEMPTIONS: The following equipment is exempt from 248 CMR 5.08(2)(a)1 through 4:

1. The equipment listed in Chapter 10 entitled “Equipment Not Required To Be Vented” in the most current edition of NFPA 54 as adopted by the Board; and

2. Product Approved side wall horizontally vented gas fueled equipment installed in a room or structure separate from the dwelling, building or structure used in whole or in part for residential purposes.

(c) MANUFACTURER REQUIREMENTS - GAS EQUIPMENT VENTING SYSTEM PROVIDED. When the manufacturer of Product Approved side wall horizontally vented gas equipment provides a venting system design or venting system components with the equipment, the instructions provided by the manufacturer for installation of the equipment and the venting system shall include:

1. Detailed instructions for the installation of the venting system design or the venting system components; and

2. A complete parts list for the venting system design or venting system.

(d) MANUFACTURER REQUIREMENTS - GAS EQUIPMENT VENTING SYSTEM NOT PROVIDED. When the manufacturer of a Product Approved side wall horizontally vented gas fueled equipment does not provide the parts for venting the flue gases, but identifies “special venting systems”, the following requirements shall be satisfied by the manufacturer:

1. The referenced “special venting system” instructions shall be included with the appliance or equipment installation instructions; and

2. The “special venting systems” shall be Product Approved by the Board, and the instructions for that system shall include a parts list and detailed installation instructions.

(e) A copy of all installation instructions for all Product Approved side wall horizontally vented gas fueled equipment, all venting instructions, all parts lists for venting instructions, and/or all venting design instructions shall remain with the appliance or equipment at the completion of the installation.

Appendix A – Lighting Instructions Plate

FOR YOUR SAFETY, READ BEFORE LIGHTING

WARNING: If you do not follow these instructions exactly a fire or explosion may result causing property damage, personal injury or loss of life.

A. This appliance has a pilot which must be lighted by hand or by remote control. Follow these instructions exactly. To save gas, turn the pilot off when not using the appliance for a prolonged period of time.

B. BEFORE LIGHTING, smell all around the appliance area for gas. Be sure to smell next to the floor because some gas are heavier than air and will settle on the floor.
WHAT TO DO IF YOU SMELL GAS

- Do not try to light any appliance.
- Do not touch any electric switch; do not use any phone in your building.
- Immediately call your gas supplier from a neighbor's phone. Follow the gas supplier's instructions.
- If you cannot reach your gas supplier, call the fire department.

C. Do not use this appliance if any part has been under water. Immediately call a qualified service technician to inspect the appliance and to replace any part of the control system and any gas control, which has been under water.

D. Use only your hand to push in or turn the control knobs. Never use tools. If the knobs will not push in or turn by hand, don't try to repair them; call a qualified service technician. Force or attempted repair may result in a fire or explosion.

OPERATING INSTRUCTIONS

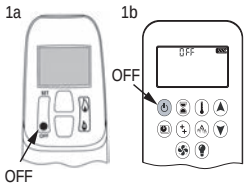

1. STOP! Read the safety information above.
2. This appliance is equipped with an on-demand pilot that shuts off after 7 days of inactivity.
3. TO CLEAR ANY GAS, turn main valve off by momentarily pressing OFF button (●) (1a) or (⏻) button (1b) on remote control handset.
   - Wait five (5) minutes to clear out any gas, then smell for gas, including near the floor.
   If you smell gas, STOP! Follow "B" in the safety information above on this label.
   If you don't smell gas, go to the next step.
4. AUTOMATIC IGNITION: MAN-knob in ON position (Fig. 2, A). (Ensure gas control knob is set to OFF (full clockwise ↻)(Fig. 2, B). Locate the pilot inside firebox (Fig. 4).
   - On the remote control handset, press and hold simultaneously the OFF (●) and large flame (🔥) buttons (1a) OR, press and hold (⏻) button (1b); a short acoustic signal confirms the start has begun.
   - Further short acoustic signals indicate the ignition process is in progress.
   - When the pilot is lit, the gas control knob (Fig. 2, B) will automatically rotate to the highest setting. Press the small flame button (🔥) (1a) or down arrow (▼) (1b) on the remote to reduce flames.

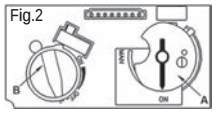

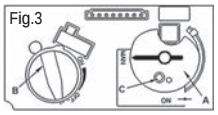

5. MANUAL IGNITION: MAN-knob in MAN position (Fig. 3, A).
   With the window off, locate the pilot inside firebox (Fig. 4).
   - Set gas control knob to OFF (full clockwise ↻) (Fig. 3, B).
   - Push down the manual pilot plunger with a small screwdriver or similar instrument (Fig. 3, C); this will establish the pilot gas flow.
   - Light gas at the pilot with a match (Fig. 4, 5).
   - Continue holding down manual pilot plunger for about 10 seconds (Fig. 3, C); after release, pilot should remain lit.
   - If the pilot will not stay lit after several tries, turn the gas control knob to OFF (full clockwise ↻) (Fig. 3, B) and call your local service technician or gas supplier.
   - Once the pilot is lit, reinstall the window and set the MAN-knob to ON (full counter-clockwise ↺)(Fig. 2, A); turn gas control knob up (↺) or down(↻) manually (Fig. 2, B) or use the flame buttons (🔥) (🔥) (1a) or arrow buttons (▼) (▲) (1b) on the remote control handset to adjust the flame height.

Fig.4 (3 versions shown)

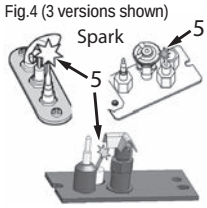

TO TURN OFF GAS TO APPLIANCE

AUTOMATIC SHUT-OFF (using the remote control handset):
Press and hold the small 🔥 button (1a) or (▼) button (1b) to shut-off the main burner gas flow.
Momentarily press the "OFF" ● button (1a) or (⏻) button (1b) on remote handset to shut-off the appliance, including pilot flame.

DO NOT REMOVE FROM FIREPLACE

4009565-01

Appendix B – Remote Control Operation

Initial Pairing

Before the remote control can be used with the fireplace, it must be paired. See *Remote Control Pairing* page 59.

Main Display and Remote Handset

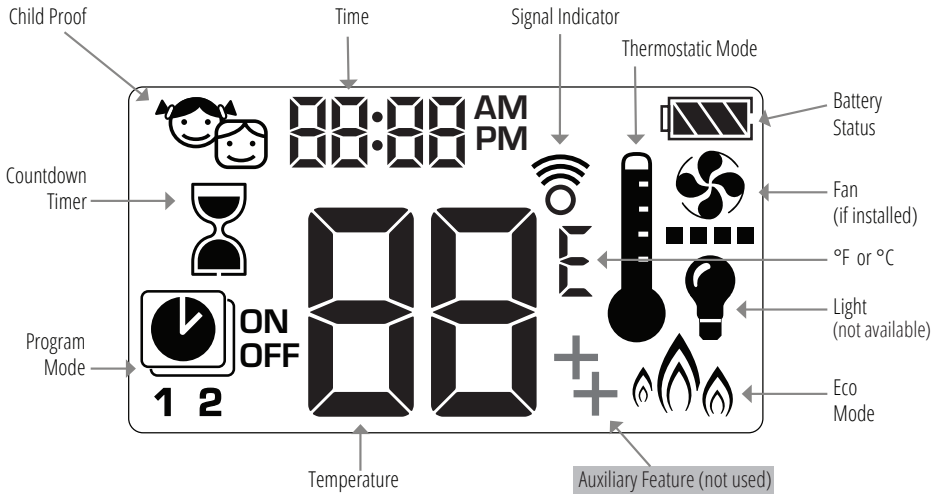

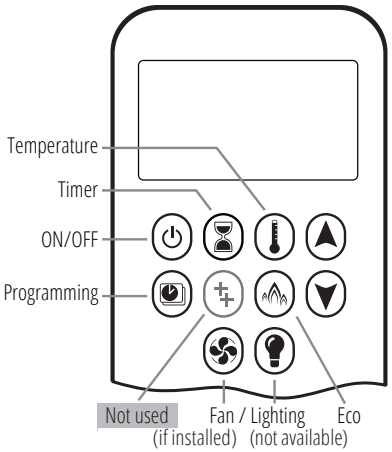

To Turn On Fire

NOTE: When pilot ignition is confirmed, motor automatically turns to maximum flame height.

One-Button lighting (default): ⏻
Two-Button lighting: ⏻ + ▲ simultaneously

Press and hold for 4 seconds, until 8 short beeps and a blinking series of lines confirms the start sequence has begun. Release button.

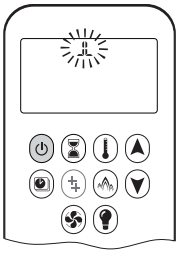

Main gas flows once pilot ignition is confirmed.

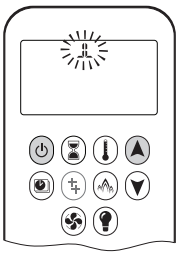

Handset automatically goes into manual mode after main burner ignition.

Standby Mode (Pilot Flame)

Press and hold ▼ to set appliance to pilot flame.

CAUTION: If the pilot does not stay lit after several tries call your local service technician or gas supplier.

To Turn Off Fire

Press ⏻ to turn OFF.

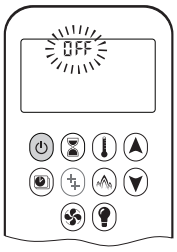

Note: There is a 2 minute delay after switching off before the next ignition is possible.

CAUTION: Always check the fire and pilot visually to ensure they are off.

Flame Height Adjustment

To increase flame height, press and hold ▲.

To decrease flame height, press and hold ▼. You may hold the button down until the fire is set to pilot flame only.

Appendix B – Remote Control Operation

Designated Low Fire and High Fire

To go to low fire, double-click ▼. "LO" is displayed.

Note: Flame goes to high fire first before going to low fire.

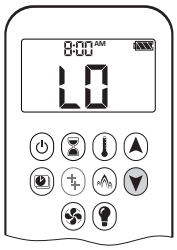

To go to high fire, double-click ▲. "HI" is displayed.

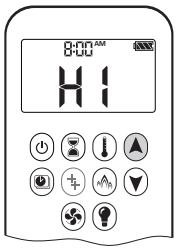

Choosing 1-Button or 2-Button Ignition

On the remote control handset, you can choose a 1-button or 2-button ignition. You can also choose to activate or deactivate some of the functions. By default, the handset is set to a 1-button ignition.

To change from 1-button to 2-button ignition, remove the batteries, wait 10 seconds, reinsert batteries, and immediately when the display flashes, press and hold the ⏻ button for 10 seconds. **ON** is displayed and **1** is flashing. When change is complete, **1** changes to **2**.

To change from 2-button to 1-button ignition, proceed the same as above. **ON** is displayed and **2** is flashing. When change is complete, **2** changes to **1**.

Deactivating or Activating Functions

These functions are active by default, but can be deactivated at any time:

- Child Proof
- Program Mode
- Thermostatic Mode
- Eco Mode
- Circulating Fan Operation
- Countdown Timer

NOTE: The function Auxiliary Feature is not used.

To deactivate functions:

1. Install batteries. All icons are displayed and flashing.
2. While the icons are flashing, press the relevant function button and hold for 10 seconds.
3. The function icon will flash until deactivation is complete. Deactivation is complete when the function icon and two horizontal bars (▬ ▬) are displayed.

Note: If a deactivated button is pressed, there is no function, and the two horizontal bars are displayed.

To activate functions:

1. Install batteries. All icons are displayed and flashing.
2. While the icons are flashing, press the relevant function button and hold for 10 seconds.
3. The function icon will continue to flash until activation is complete, and then turn solid. Activation is complete when the function icon is displayed.

Setting Celsius or Fahrenheit

To change between °C and °F, press and hold ⏻ + ⌛ simultaneously.

Note : °C = 24-hour clock
°F = 12-hour clock

Setting the Time

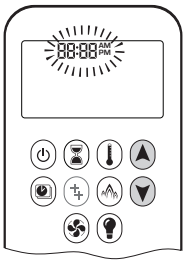

1. Press ▲ + ▼ simultaneously. **Day** flashes.
2. Press ▲ + ▼ to select a number to correspond with the day of the week.
   - 1 = Monday
   - 2 = Tuesday
   - 3 = Wednesday
   - 4 = Thursday
   - 5 = Friday
   - 6 = Saturday
   - 7= Sunday
3. Press ▲ + ▼ simultaneously. **Hour** flashes.
4. To select hour press ▲ or ▼.
5. Press ▲ + ▼ simultaneously. **Minutes** flash.
6. To select minutes press ▲ or ▼.
7. To confirm, press ▲ + ▼ simultaneously or wait.

Appendix B – Remote Control Operation

Child Proof

Your handset can be set to lock out all commands to the fireplace, except OFF.

To turn Child Proof ON:

1. Press and hold ⏻ + ▼ simultaneously.
2. is displayed. Child Proof is now active.

To turn Child Proof OFF:

1. Press and hold ⏻ + ▼ simultaneously.
2. disappears. Child Proof is now inactive, and the handset has full function.

Countdown Timer

You can set your fireplace to automatically turn off at the end of a timer.

To set a Countdown Timer:

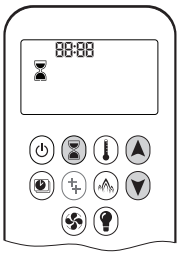

1. Press and hold ⌛ until ⌛ is displayed. **Hour** flashes.
2. Press ▲ or ▼ to select Hour.
3. To confirm, press ⌛. **Minutes** flash.
4. Press ▲ or ▼ to select Minutes.
5. To confirm, press ⌛ or wait.

To turn off a Countdown Timer:

1. Press ⌛, and the ⌛ countdown disappears.

Note: The Countdown Timer only works in Manual, Thermostatic, and Eco modes. Maximum countdown time is 9 hours and 50 minutes.

Light/Dimmer Operation (not available)

Circulating Fan Operation (if installed)

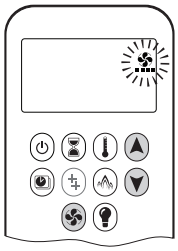

Setting:

1. Press and hold ✣ until ✣ flashes.
2. Press ▲ to increase or ▼ to decrease fan speed.
3. To confirm setting, either press ✣ or wait. ✣ is displayed.

Off:

Press ▼ until all 4 speed level bars disappear.

Note: When setting, if the fan was not switched off after last use, it starts automatically 4 minutes after ignition at maximum speed, and goes to the last set level after 10 seconds. The fan stops 10 minutes after the gas is OFF or at pilot.

Appendix B – Remote Control Operation

Modes of Operation

Thermostatic Mode

The room temperature is measured and compared to the set temperature. The flame height is automatically adjusted to achieve the set temperature.

Program Mode

The temperature is controlled by Programs 1 and 2, each of which can be set to go on and off at specific times, at a set temperature.

Eco Mode

Flame height modulates between high and low. If the room temperature is lower than the set temperature, the flame height stays on high for a longer period of time. If the room temperature is higher than the set temperature, the flame height stays on low for a longer period of time. One cycle lasts approximately 20 minutes.

If any of the above modes (Thermostatic, Program, or Eco) are engaged by the MyFire app over WiFi, the handset will display **APP**.

Manual Mode

The on/off status of the fireplace, as well as flame height, are manually controlled by the user.

Thermostatic Mode

On:

Press . is displayed. Preset temperature displays briefly, followed by the room temperature.

Setting Desired Temperature:

1. Press and hold until is displayed and set temperature flashes.
2. To adjust set temperature, press or .
3. To confirm, press or wait.

Off:

1. Press .
2. Press or to go to Manual Mode.
3. Press to go to Program Mode.
4. Press to go to Eco Mode.

Program Mode

On:

Press .
, **1** or **2**, **ON** or **OFF** are displayed.

Off:

1. Press , , or to go to Manual Mode.
2. Press to go to Thermostatic Mode.
3. Press to go to Eco Mode.

Note: The set temperature for Thermostatic Mode is the temperature for the ON time in Program Mode. Changing the Thermostatic Mode set temperature also changes the ON time temperature in Program Mode.

Default Settings:

- ON TIME (Thermostatic) TEMPERATURE: 70°F / 21°C
- OFF TIME TEMPERATURE: "– –" (pilot flame only)

Appendix B – Remote Control Operation

Temperature Setting:

1. Press and hold until flashes. **ON** and set temperature (set in Thermostatic Mode) is displayed.
2. To continue, press or wait. , **OFF** displayed, temperature flashes.
3. Select off temperature by pressing or .
4. To confirm, press .

Note: The on (Thermostatic) and off set temperatures are the same for each day.

Day Setting:

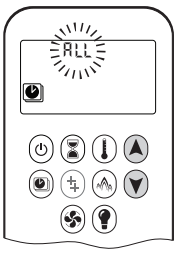

1. **ALL** flashes. Press or to choose between:
   - **ALL** = same settings ON-OFF every day
   - **SA:SU** = same settings ON-OFF Saturday and Sunday
   - **1, 2, 3, 4, 5, 6, 7** = daily timer—unique ON-OFF settings for a single day of the week, for multiple days of the week or for every day of the week.
2. To confirm, press .

ALL Selected (same settings every day)

On Time Setting (PROGRAM 1)

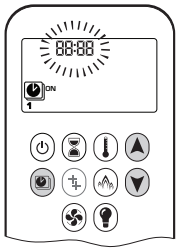

1. , **1, ON** are displayed. **ALL** is displayed briefly. Hour flashes.
2. To select hour, press or .
3. To confirm, press . , **1, ON** are displayed. **ALL** displayed briefly. Minutes flash.
4. To select minutes, press or .
5. To confirm, press .

Off Time Setting (PROGRAM 1)

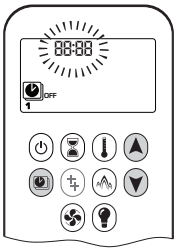

1. , **1, OFF** are displayed. **ALL** is displayed briefly. Hour flashes.
2. To select hour, press or .
3. To confirm, press . , **1, OFF** are displayed. **ALL** displayed briefly. Minutes flash.
4. To select minutes, press or .
5. To confirm, press .

Note: Either continue to PROGRAM 2 and set ON and OFF times or stop programming at this point, and PROGRAM 2 remains deactivated.

Note: PROGRAM 1 and 2 use the same ON (Thermostatic) and OFF temperatures. Once a new ON (Thermostatic) and/or OFF temperature has been set, that temperature becomes the new default setting.
Note: ON and OFF times programmed for PROGRAM 1 and PROGRAM 2 become the new default times.

The batteries must be removed to clear the PROGRAM 1 and PROGRAM 2 ON and OFF times and temperatures.

SA:SU (same settings Saturday and Sunday) or 1, 2, 3, 4, 5, 6, 7 (different settings on different days)

- Set on time and off time using the same procedure as "ALL Selected" above.
- Waiting to finish setting.

Eco Mode

On:

Press button to enter Eco Mode. is displayed.

Flame height modulates between high and low every 20 minutes.

Off:

Press button to exit Eco Mode. disappears.

Appendix B – Remote Control Operation

Low Battery Indication

⚠ **CAUTION:** Do not use a screwdriver or other metallic object to remove the batteries from the battery holder or the handset. This could cause a short circuit.

Handset

The battery icon will show when the battery needs to be replaced. Replace with two 1.5 V AAA alkaline batteries.

Receiver

Frequent beeps for 3 seconds when the motor turns indicate the batteries in the battery holder need to be replaced. Replace with four 1.5 V AA alkaline batteries.

Automatic Shut Off

Countdown Timer

At the end of countdown time period, the fire turns off. The Countdown Timer only works in Manual, Thermostatic, and Eco Modes. Maximum countdown time is 9 hours and 50 minutes.

Low Battery Receiver

With low battery power in the battery holder, the system shuts off the fire completely. (This will not happen if the power is completely interrupted.)

Seven Day Shut Off

The system shuts off the fire completely if there is no change in flame height for 7 days.

Automatic Turn Down

3 Hour No Communication Function

The valve will turn to pilot flame if there is no communication between the handset and receiver for a 3-hour period. The fire will continue to function normally when communication is restored.

Appendix B – Remote Control Operation

Error Codes

In the event of an error condition with the handset or fireplace, the handset will display an error code.

Failure Code	Message on Handset	Duration of Display	Symptom	Possible Cause
F04	F04	4 sec	• No pilot flame within 30 sec • **Note:** after 3 failed ignition sequences, F06 shown	• No gas supply • Air in pilot supply line • No spark • Reversed polarity in thermocouple wiring
F06	F06	4 sec	• 3 failed ignition sequences in 5 minutes • Fire is not responding, no pilot flame	• No gas supply • Air in pilot supply line • No spark • Reversed polarity in thermocouple wiring • Incorrect pilot orifice if valve has been converted from LPG to NG or vice versa
F07	Low battery symbol	Permanent	• Battery icon flashes on handset display	• Low battery in handset
F09	F09	4 sec	• Fire is not responding • No electronic control of fire	• Down arrow button was not pressed during pairing • Receiver and handset are not synced
F46	F46	4 sec	• Fire is not responding • Intermittent response • No electronic control of fire	• No or bad connection between receiver and handset • No power at receiver (batteries low) • Low communication range (mains adapter faulty, handset not communicating with receiver)

Appendix C – HeatShift System®

HeatShift™ System

Planning and Installation: P2 with HeatShift®

For use with Valor Heaters P2 200 ONLY

Application

The HeatShift™ System redistributes the warm air flow away from the fireplace to a position higher up the wall using natural convection, without the use of a fan.

With the plenum LDK12, the hot air is relocated to a position higher up the wall or even in an adjacent room.

The result is much cooler wall temperatures above the fireplace opening for locating televisions, artwork, etc.

The 255CFK Circulating Fan Kit is not recommended when installing the HeatShift System.

These instructions are to be used in conjunction with the fireplace's installation instructions.

Approvals

The LDK12 and LDK13 kits are CSA approved for use only with Valor Series fireplaces listed above—DO NOT use with any other models.

This HeatShift system may also be used to reduce wall surface temperatures on approved outdoor installations.

The 4" [102 mm] diameter ducts used with this kit must be of metal and meet requirements of UL-181 Class 1 Air Duct. Flexible aluminum duct is acceptable provided it meets the UL-181 Class 1 requirements.

⚠ WARNING

When placing discharge close to ceilings, staining or streaking may occur on light colored ceilings due to any dust, etc. in air flow; placing plenum(s) lower on the wall will help reduce the possibility of staining or streaking.

⚠ WARNING

DO NOT cover or place objects in front of or on top of air outlet(s). AVOID locating outlet within 7 feet [2.13 m] above floor level as discharge temperatures are hot!

NOTE

The use of HeatShift will permit lower mantel clearances to be used—see "*Clearances to Combustibles*" in the P2 Installation Manual.

These lower mantel clearances must ONLY be used when the HeatShift system is installed.

NOTE—Sprinklers

Depending on room temperature, HeatShift air discharge temperatures can be in the range of 210 °F (99 °C). Please refer to local building code, choose appropriate sprinkler heads and place them accordingly. SeeTypical Framing page.

Appendix C – HeatShift System®

Kits

The LDK12 HeatShift kit is required for use with the P2 fireplace if HeatShift is to be installed.

The LDK11 and LDK13 are optional accessories, but some approved liner and clamps are required. See “Approvals” on the previous page for size and ratings details.

- LDK12 - Plenum, 18” [457 mm] with a dual collar plate (collars 4” [102 mm] diameter)
- LDK13 - Finishing frame, 18” [457 mm] to use with LDK12
- LDK11 - Liners (2), 10’ [3 m] long, 4” [102 mm] diameter + clamps (8)

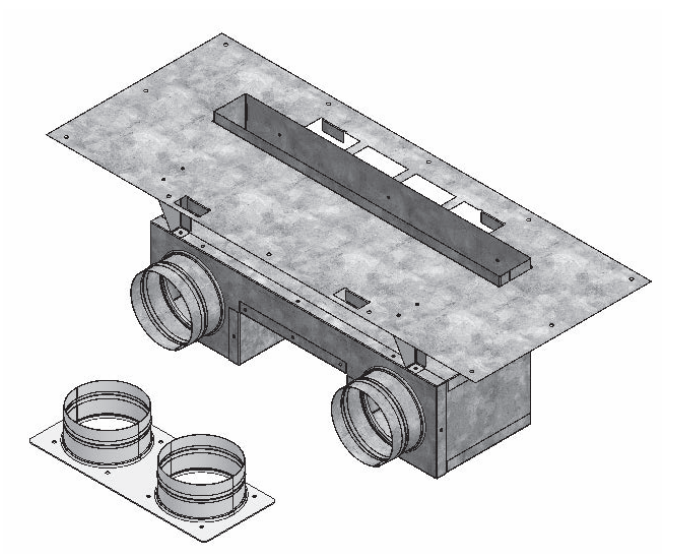

LDK12
18” [457 mm] plenum
4” [102 mm] takeoff collars

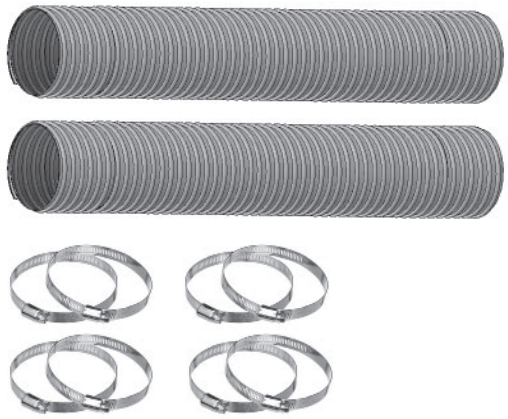

LDK11
2 - 10’ x 4” [3m x 102mm] liners (and clamps)

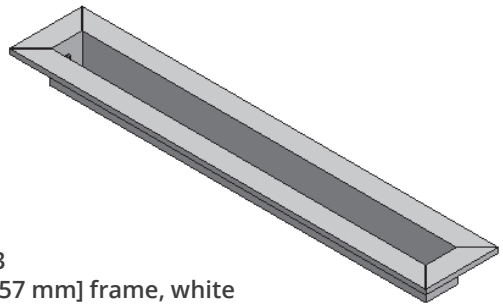

LDK13
18” [457 mm] frame, white

Appendix C – HeatShift System®

Configuration P2 with LDK12

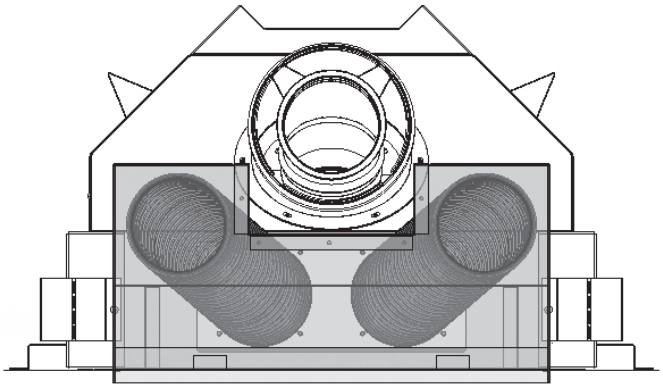

The LDK12 plenum is typically installed directly above the P2 unit, connected by the LDK11 (or approved 4" [102 mm]) liners. It may be offset from center, or vented to the rear if desired.

⚠ WARNING

The plenum duct kits are approved for horizontal discharge ONLY. DO NOT install plenum in floor or ceiling. DO NOT COVER OR PLACE objects in front of or on top of air outlet(s). AVOID locating outlet within 7 feet [2.13 m] of the floor level as discharge air temperatures are hot!

DO NOT DISCHARGE THROUGH EXTERIOR WALLS!

NOTE

Co-axial vent can be routed vertically through the cutout in the HeatShift plenum. If the plenum must be offset to the rear, the vent must also be offset to accomodate.

Dimensions

Front View

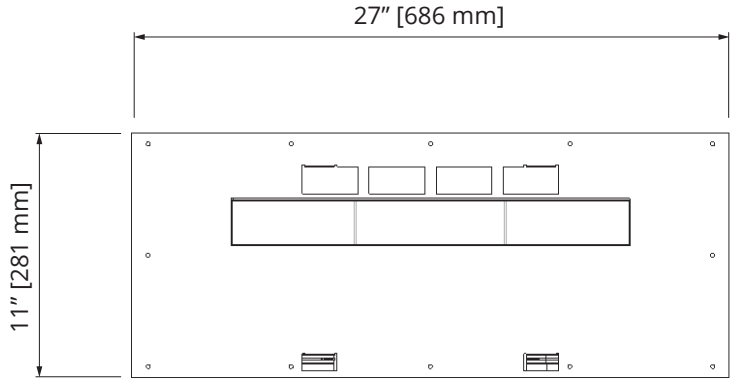

Side View

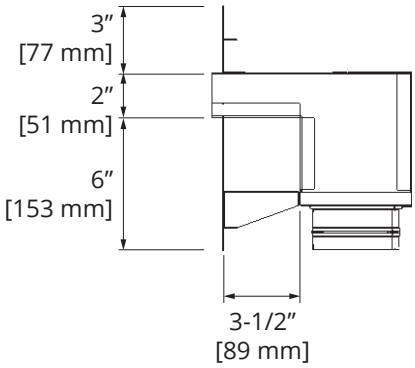

Bottom View

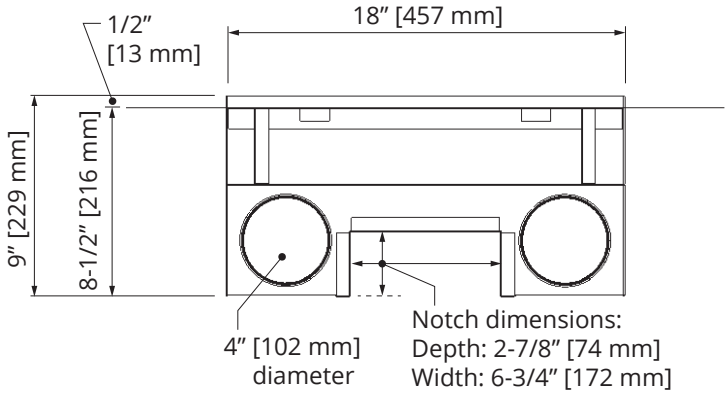

Appendix C – HeatShift System®

Overview - LDK12 Kit

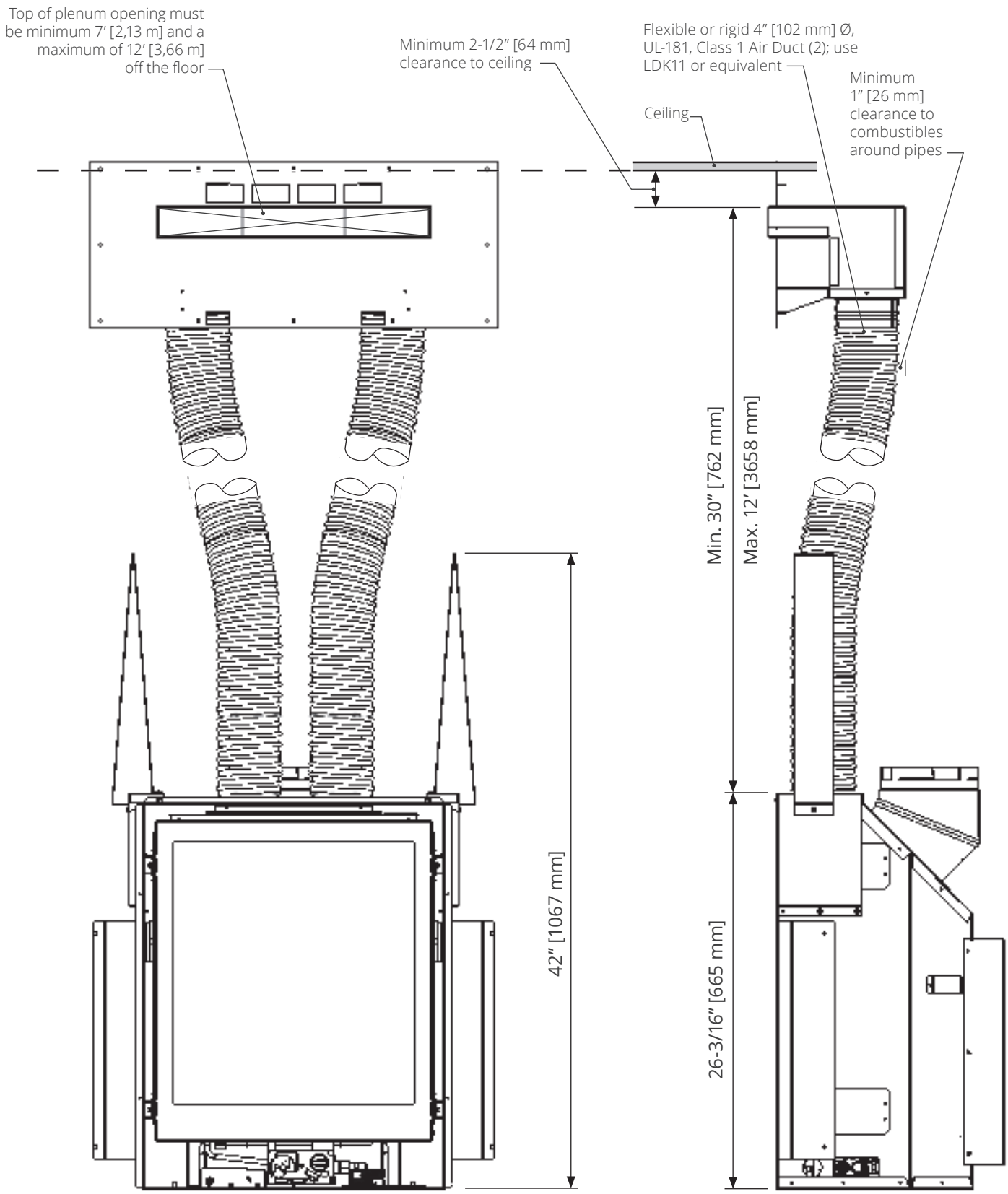

Appendix C – HeatShift System®

Allowable Rise and Offset

Y Vertical Rise	X Max. Allowable Horizontal Offset
30″ [762 mm]	24″ [610 mm]
36″ [915 mm]	36″ [915 mm]
42″ [1067 mm]	48″ [1220 mm]
48″ [1220 mm]	60″ [1524 mm]
54″ [1372 mm]	72″ [1829 mm]
60″ [1524 mm]	84″ [2134 mm]
66″ [1677 mm]	96″ [2439 mm]
12′-0″ [3658 mm]	96″ [2439 mm] Max.

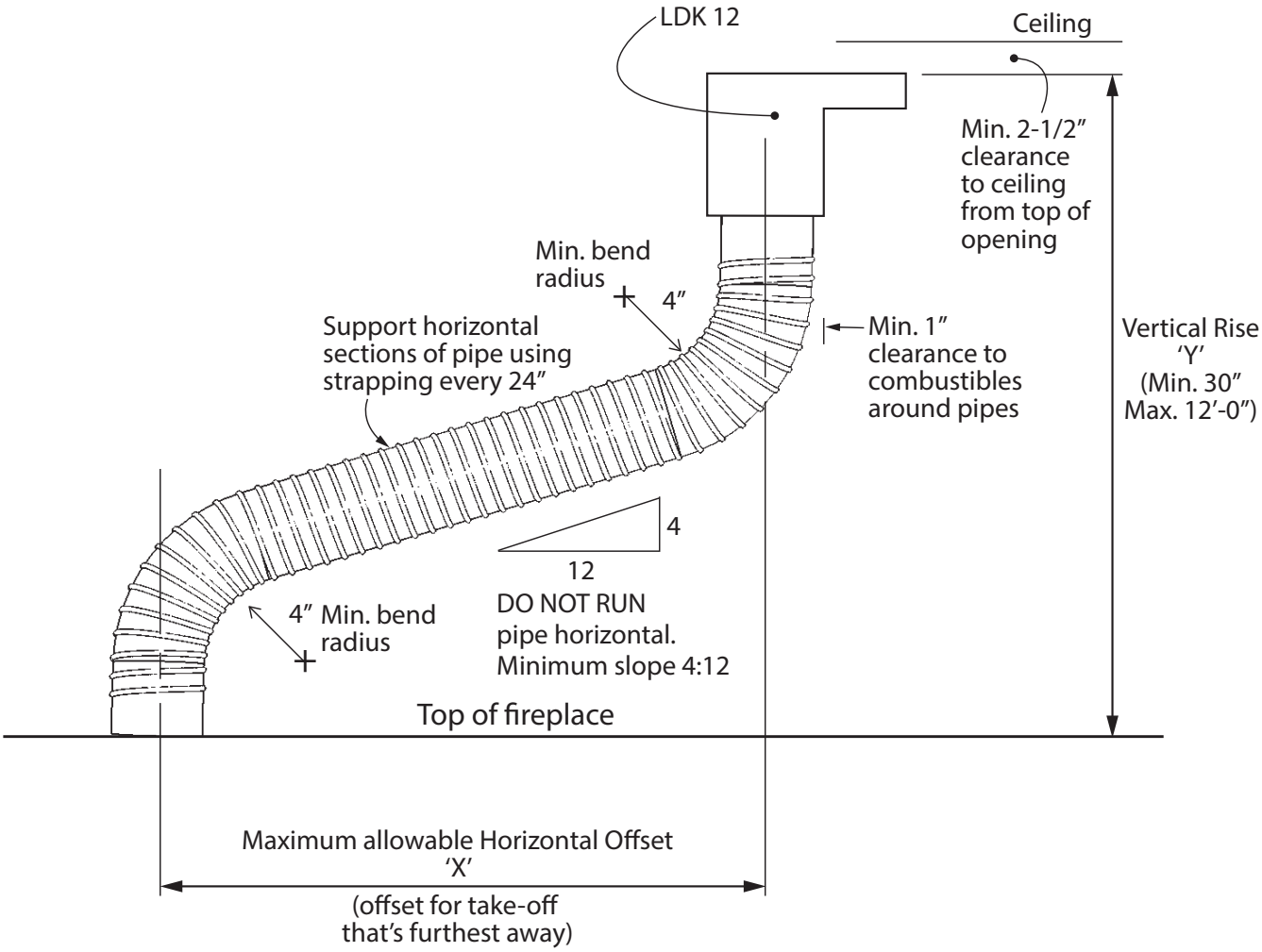

Appendix C – HeatShift System®

Typical Framing - LDK12 Kit

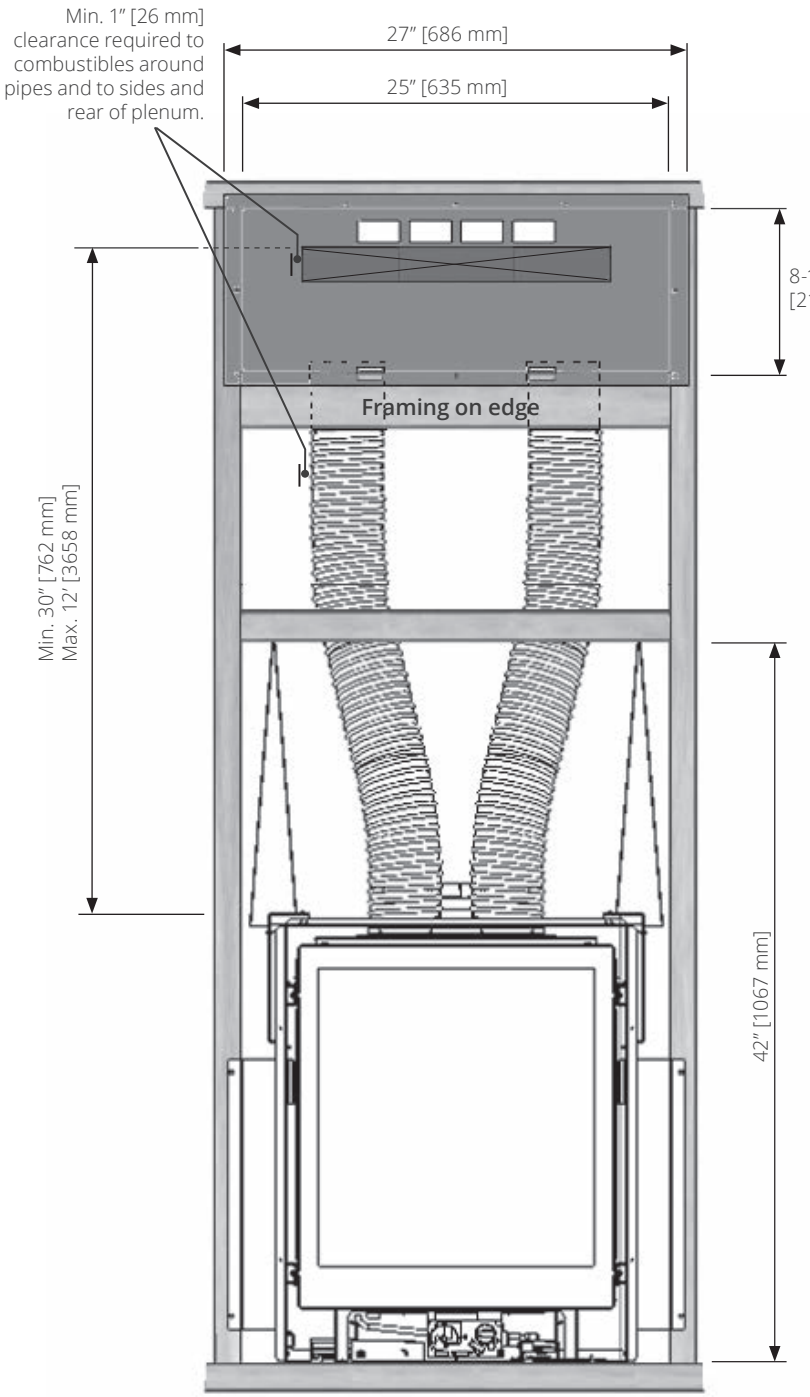

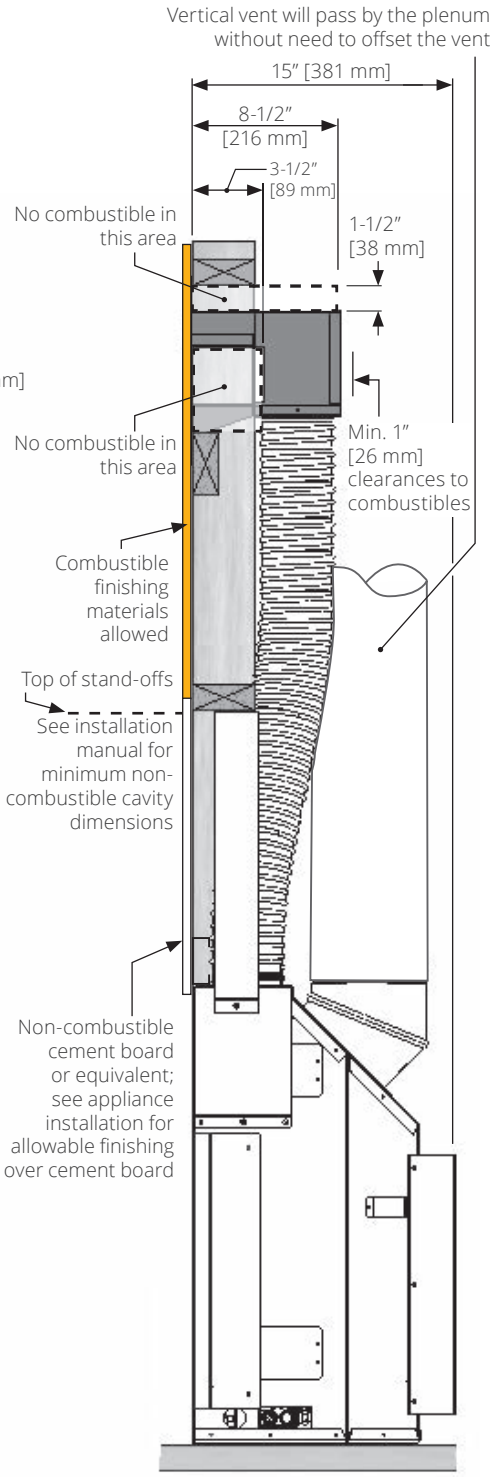

NOTE—Sprinklers

Depending on room temperature, HeatShift air discharge temperatures can be in the range of 210 °F (99 °C). Please refer to local building code, choose appropriate sprinkler heads and place them accordingly.

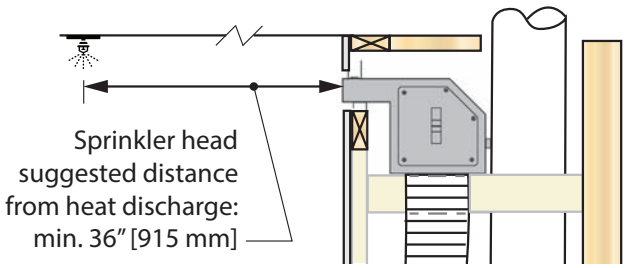

Appendix C – HeatShift System®

Install HeatShift Take-Off Collars

1. Remove the cover plate on top of the appliance case (8 screws).

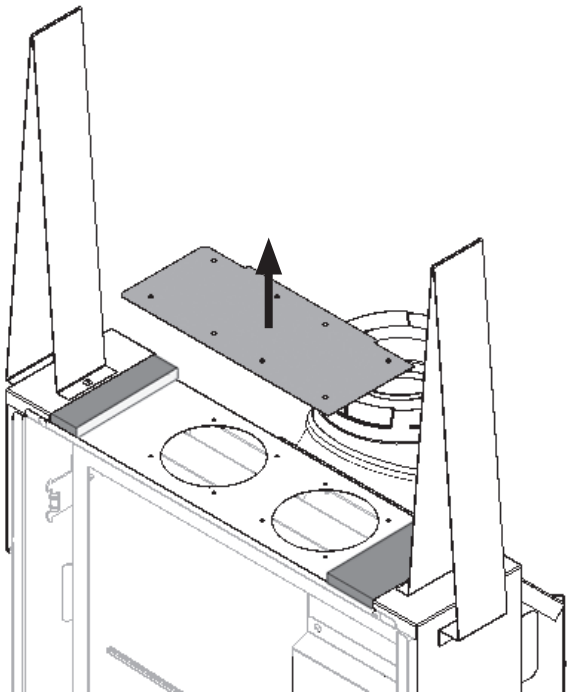

2. Install the take-off collars on the holes on top of the appliance's case (8 screws).

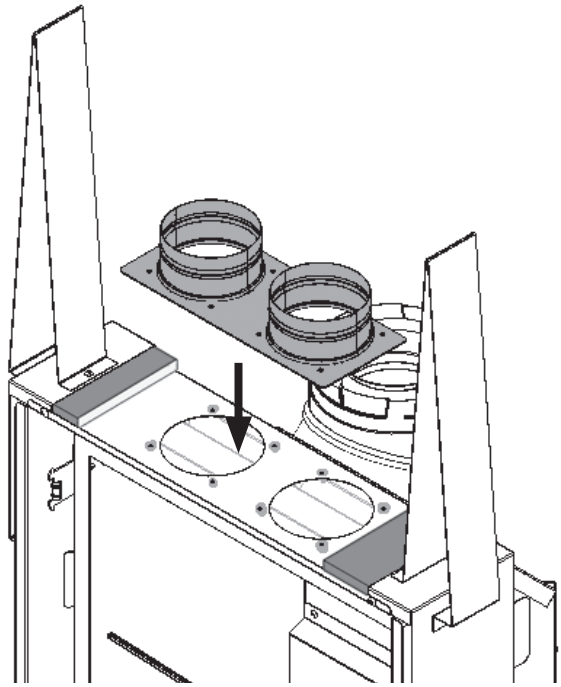

⚠ WARNING

BOTH (2) takeoffs MUST BE CONNECTED TO THE PLENUM.

Appendix C – HeatShift System®

Install Plenum Kit (LDK12)

1. Frame a rough opening at the desired location—see earlier sections of this manual for detail.

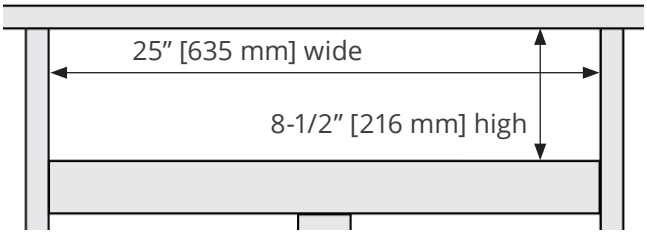

2. Install the plenum into the front of the frame opening, maintaining minimum clearances to combustibles as previously listed.

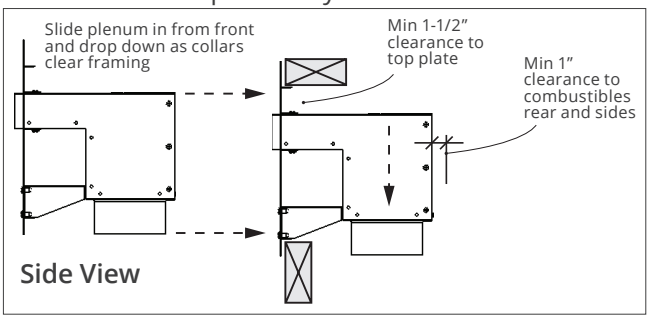

3. Secure the plenum to the front of the framing using screws through the faceplate (12 screws).

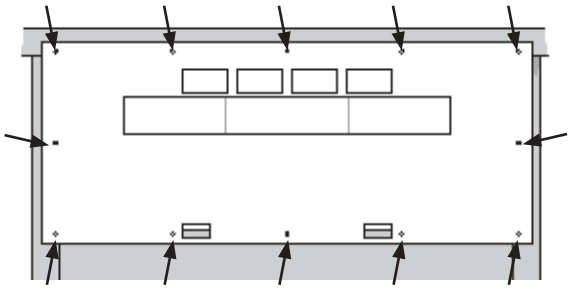

4. Attach one section of UL-181, Class 1 approved air duct to each of the collars and secure it with gear clamps provided. **DO NOT SPLICE DUCTS!**
5. Attach the top of the air duct sections to the plenum securing them with the gear clamps provided. An upward slope must be maintained in horizontal sections of pipes for proper convection (see Allowable Rise and Offset in this manual). Use straps as necessary to maintain the pipes positions. Support horizontal sections every 24 inches.
6. Paint the inside surfaces of the plenum using high-temperature flat black spray paint for installations where the inside of the plenums may be visible. **Note:** The flanges of the white finishing frame (when used) will insert approximately 1-1/4” into the plenum covering the shiny sheet metal.
7. Install the LDK13 finishing frame to the plenum after the wall finish is completed.

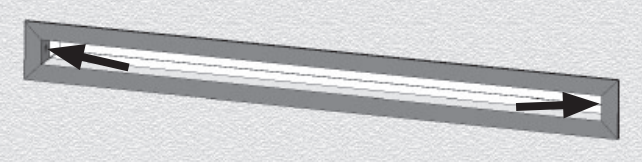

Note: The frame/louver are finished white but may be painted another color if desired; use high temperature paint (250°F). You may also finish up to the perimeter of the plenum opening with your material of choice and not use the frame or louver. Do not finish over the opening in the plenum outlet.

8. Continue with the fireplace installation.

Repair Parts List

	Description	Part no.
LDK12	Hot Air Plenum 18” [mm] Kit	
	Plenum double 18” x 2” [762 x 61 mm]	4010613
	Take-off collar plate - 2 collars of 4” [102 mm] diameter	4007864
LDK13	Outlet Frame Kit for LDK12, 18” [mm]	
	Aux Frame-SPL 18” x 2” [762 x 61 mm] white	4009528
LDK11	4” [102 mm] Aluminum 2-ply Flex Kit	
	4” [102 mm] dia 10’ [3 m] (uncompressed) aluminum chimney liners (2)	4007953
	2.5-4.5” [64-115 mm] ss gear clamps (8)	4007955

Each kit is sold separately.

Appendix D – Spare Parts

	Description	Part no.
1	45 degree flanged elbow - short	0945JM
2	Elbow gasket	4002999
3	Top standoffs P2 (2)	4008556
4	Radiant shields (2)	4010732
5	*Micore* top panel	4010731
6	Dual cover plate	4007425
7	Shield back standoff	4010729
8	Standoffs (2)	4002986
9	Frame fixing brackets (2)	4010739
10	Restrictor plate	4010702
11	Side brick anchors (2)	4011761
12	Latch assembly (4)	4009058
13	Latch pull hook	4009219
14	Log support bracket	4009370
15	Burner cover	4009366
16	Window assembly	4008225S
17	Hot Glass warning label	4003093
18	Burner module assembly—natural gas	4008528S
	Burner module assembly—propane gas	4008529S
19	Injector elbow 82-580--natural gas	720A580
	Injector elbow DMS#54--propane gas	4010774
20	Steel flat washer 0.37 inch	4007461
21	Spring tension washer 10 mm double wave	4007460
22	Air shutter—natural gas	4011918
	Air shutter—propane gas	4012151
23	Anti flashback shield	4007629
24	Burner dual ports P2	4008519
25	Platform stand	4008527
26	Burner mounts 20 Ga (2)	4007140
27	Pilot shield	4010812
28	PSE Pilot assy 36”—natural gas	4008484
	PSE Pilot assy 36”—propane gas	4008485
29	Thermocouple assembly	4008490
30	Pilot injector PSE-730—natural gas	4008493
	Pilot injector PSE-727—propane gas	4008494
31	Pilot tube	4008486
	Electrode: incl. with no. 28 only	
	Ignition wire: incl. with no. 28 only	
32	Pilot gasket (2)	4000715
33	Pilot stand	4006761
34	Burner module plate	4008521
35	Module gasket rear	4008524
36	Module gasket right side	4008525
37	Module gasket front	4008523
38	Module gasket left side	4008526
39	Link bracket	4011915
40	Pipe sealing plate	4011394
41	Aeration lever P2	4007288
42	Washers #10 x 0.562 plated (2)	4006692

	Description	Part no.
43	Spring washers 3/16 x 9/16 (2)	4006691
44	#10-24 zinc finish steel reverse nuts (2)	4007890
44a	Air shutter stopper	4012001
45	Valve mount P2	4010546
46	Gas supply tube assembly	4008522
47	GV60 gas valve, no connectors	4000873
47a	Inlet connector	4000746
47b	Flex pipe inlet connector	4002833
47c	Straight connector	220K891
47d	By-pass screw #150 (natural gas)	4003487
	By-pass screw #105 (propane gas)	4000824
47e	Pipe s/s flex, incl. #47b	4000345
48	Thermocurrent interruptor	4001037
49	Symax receiver two-way	4005597
50	Wiring harness GV60 valve	4001187
51	Yellow interruptor cable	4002096
52	Red cable to interrupter	4001035
53	Battery box cable 1500mm	4006552
54	Battery holder BH-343-eB6	4006553
55	Valor 10 handset black	4007548
56	Valor 10 wall holder	4004459
57	Ceramic Liner Sets	
	Plain Black	260PBL
	Charcoal Bricks	265CBL
58	Top panel	
	Plain Black	4010664
	Charcoal Bricks	4011066
59	Right side panel	
	Plain Black	4010661
	Charcoal Bricks	4011067
60	Rear panel	
	Plain Black	4010663
	Charcoal Bricks	4011065
61	Left side panel	
	Plain Black	4010662
	Charcoal Bricks	4011064
62	Reflective Glass Liners	270RGL
63	Top ceramic panel	4010664
64	Side filler panels (2)	4011092
65	Left side glass panel	4011089
66	Right side glass panel	4011088
67	Rear filler panel	4011090
68	Rear glass panel	4011087
69	GV60 valve repair kit (not included)	4004544
70	Driftwood Log Set	205DWK
	Log P13	4009468
	Log P14	4009469
	Log P15	4009470
	Log P16	4009471
	Log P17	4009472

Appendix D – Spare Parts

	Description	Part no.
	Log P18	4009473
	Ember bed 45	4009406
	Bag of embers	4009407
71	Birch Log Set	205BLK
	Log P1	4009424
	Log P2	4009425
	Log P3	4009426
	Log P4	4009427
	Log P5	4009428
	Log P6	4009429
	Emberbed 45	4009406
	Bag of Embers	4009407
72	Traditional Log Set	205LSK
	Log 39	4009399
	Log 40	4009400
	Log 41	4009401
	Log 42	4009402
	Log 43	4009403
	Log 44	4009405
	Emberbed 45	4009406
	Bag of Embers	4009407
73	Coal Set	205CSK
	Coal piece—burner	4009430
	Coal piece—front	4009431
	Coal piece—rear	4009432

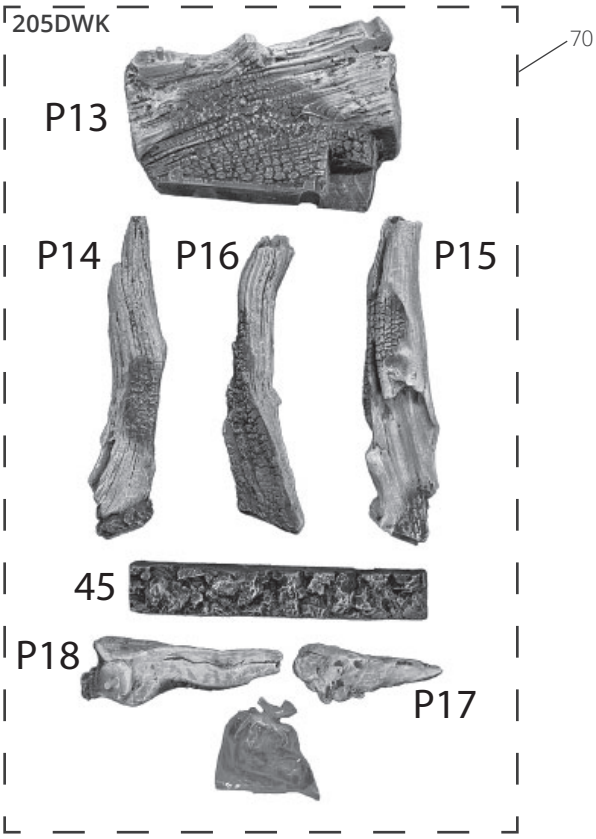

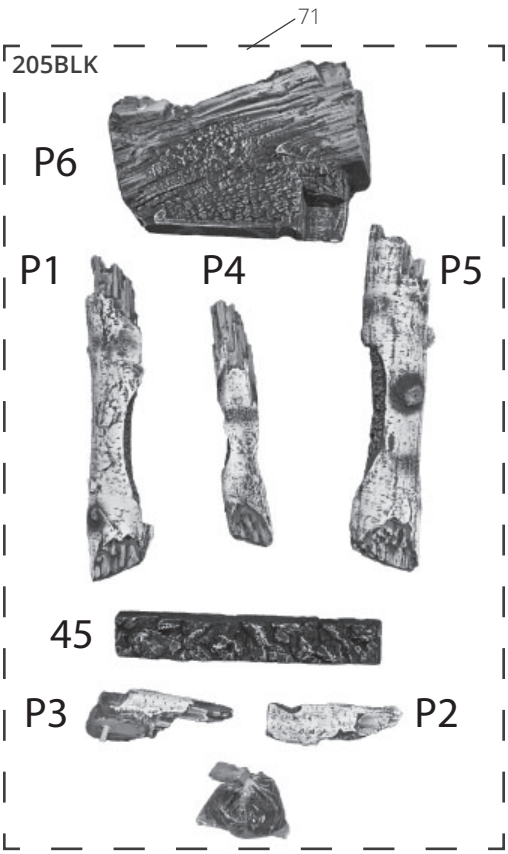

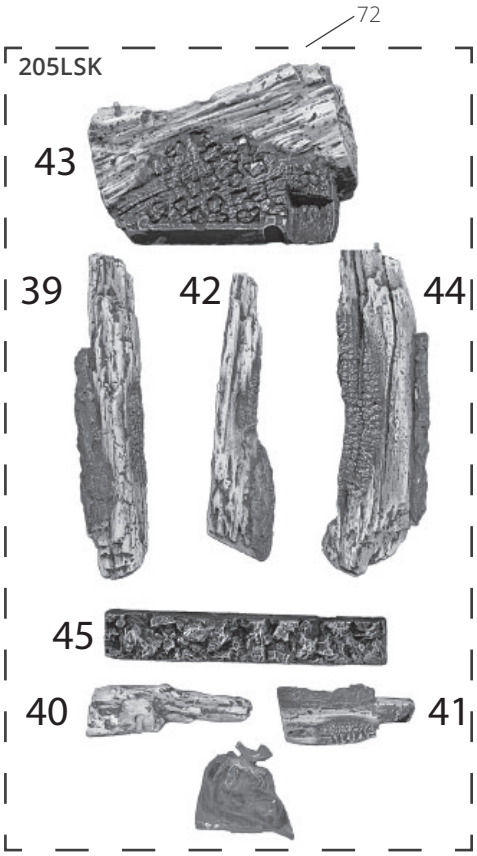

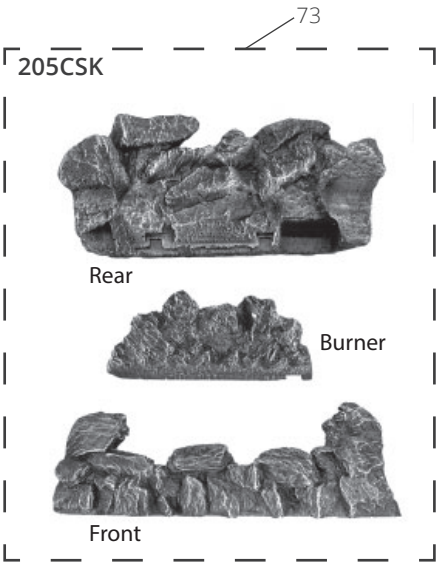
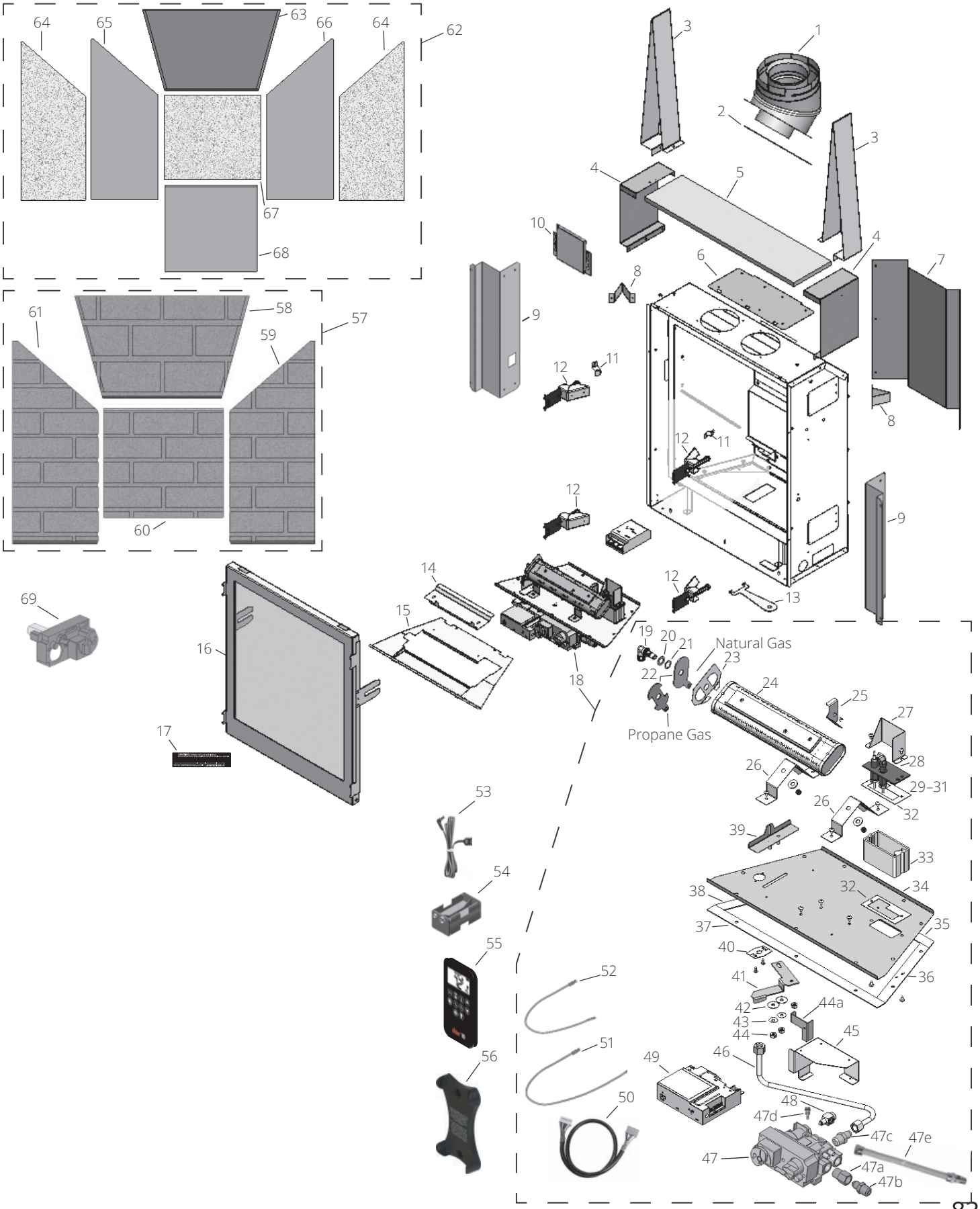
Appendix D – Spare Parts